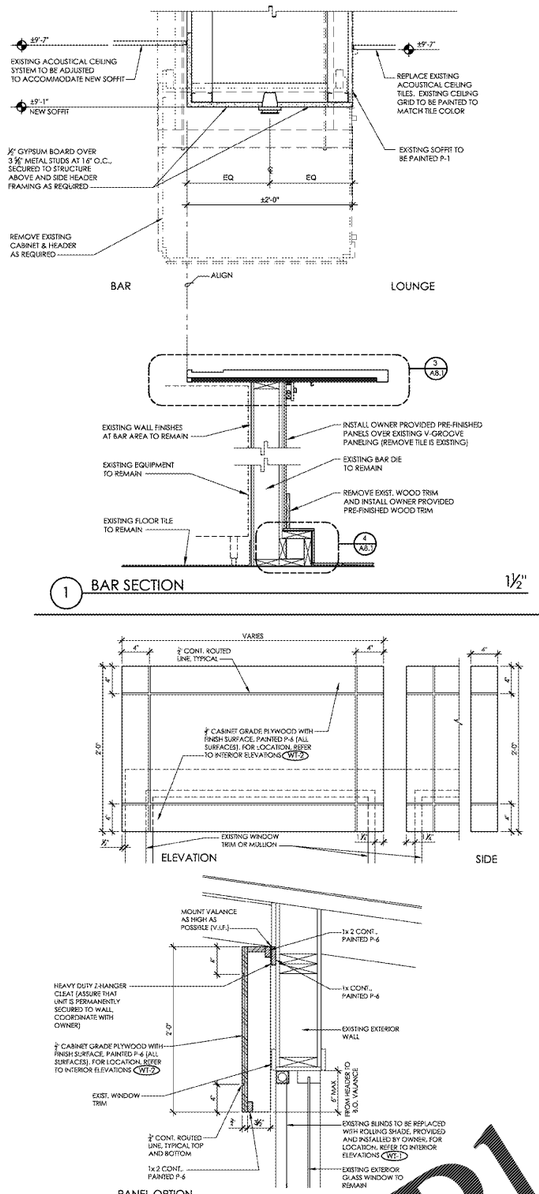


1 BAR SECTION 1½"

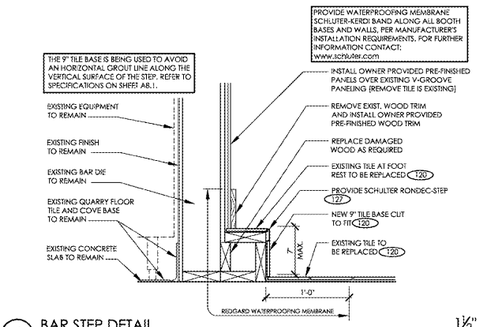


4 BAR STEP DETAIL 1½"

IF REQUIRED, VERIFY WITH DARDEN'S CONSTRUCTION PROJECT MANAGER

NOT USED

9

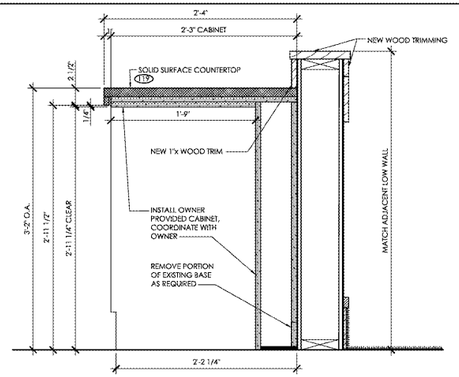


5 ISLAND CABINET DETAIL 1 1/2"

NOT USED

10







6 CARPET BASE DETAIL 3"

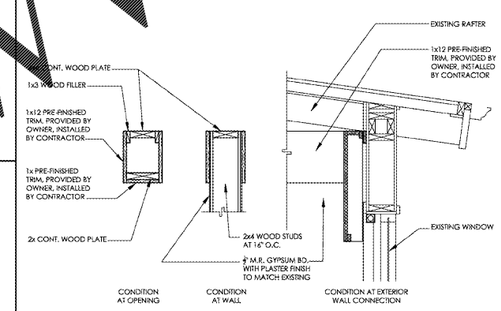


11 FAMILY ROOM WALL DETAILS 1"




2 VALANCE DETAIL 1½"

FOR LOCATIONS, REFER TO INTERIOR ELEVATIONS.

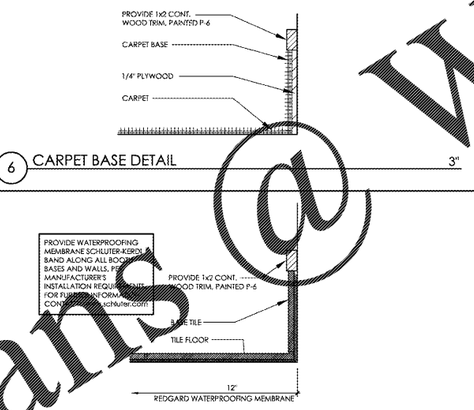


7 BASE TILE DETAIL 3"

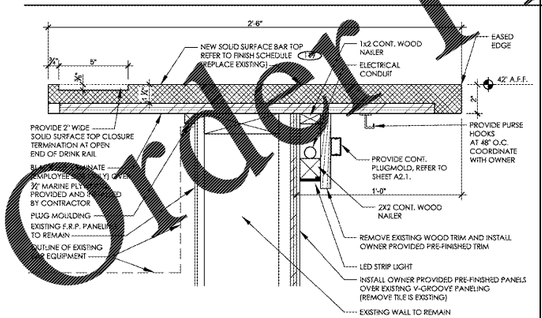


3 COUNTER TOP DETAIL 3"

ALL WOOD TRIMMING IS PROVIDED BY OWNER, INSTALLED BY CONTRACTOR

NOT USED

8

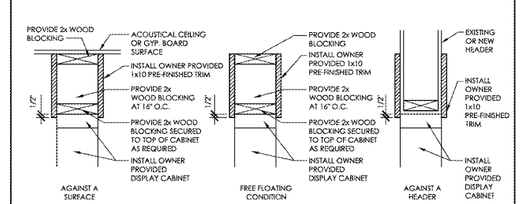


12 TRIM DETAILS 1½"

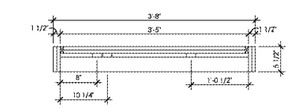


13A PLAN SECTION DETAIL: POS BOX

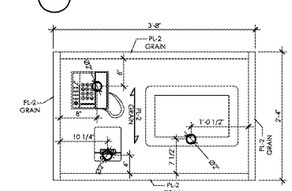


13B ELEVATION DETAIL: POS BOX

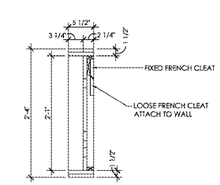


13C SIDE SECTION DETAIL: POS BOX

13 P.O.S. STATION WALL PANEL DETAIL 1"

## INTERIOR FINISH SCHEDULE

04.03.2018

NOTES:
1. NO SUBSTITUTION OR ALTERNATE SUPPLIER WILL BE ALLOWED.

| No. | MATERIAL | DESCRIPTION | REMARKS (SUPPLIED/INSTALLED BY G.C., U.N.O.) |
|---|---|---|---|
| P-1 | PAINT (WALLS) | BENJAMIN MOORE - 254, EGGSHELL FINISH<br>COLOR: WOVEN JACQUARD | NOTE: SUPPLY SAMPLE FOR OWNER APPROVAL PRIOR TO APPLICATION<br>REFER TO PAINT NOTES BELOW |
| P-2 | PAINT (WALL ACCENT) | PAINT (P-2A): BENJAMIN MOORE - 258, EGGSHELL FINISH<br>COLOR: ACORN SQUASH<br>PAINT (P-2B): BENJAMIN MOORE, EGGSHELL FINISH<br>COLOR: #2063-10-RAISIN TORTE<br>PAINT (P-2C): BENJAMIN MOORE, EGGSHELL FINISH<br>COLOR: #1001-NORTH CREEK BROWN | NOTE: SUPPLY SAMPLE FOR OWNER APPROVAL PRIOR TO APPLICATION<br>REFER TO PAINT NOTES BELOW |
| P-3 | PAINT (WOOD OR METAL) | BENJAMIN MOORE - AURA R2114-1G<br>COLOR: BITTERSWEET CHOCOLATE<br>FINISH: WOOD= SATIN METAL= SEMI-GLOSS | NOTE: SUPPLY SAMPLE FOR OWNER APPROVAL PRIOR TO APPLICATION<br>REFER TO PAINT NOTES BELOW |
| P-4 | PAINT (CEILING) | BENJAMIN MOORE, EGGSHELL<br>COLOR: #1001-NORTH CREEK BROWN | NOTE: SUPPLY SAMPLE FOR OWNER APPROVAL PRIOR TO APPLICATION<br>REFER TO PAINT NOTES BELOW |
| P-5 | PAINT (CEILING) | BENJAMIN MOORE, EGGSHELL<br>COLOR: #HC-26-MONROE BISQUE | NOTE: SUPPLY SAMPLE FOR OWNER APPROVAL PRIOR TO APPLICATION<br>REFER TO PAINT NOTES BELOW |
| P-6 | PAINT (TRIMMING) | PITTSBURGH PAINTS<br>BREAK-THROUGH 250, SATIN UID BASE<br>COLOR: FRENCH TOAST, #PPG13-24 | NOTE: SUPPLY SAMPLE FOR OWNER APPROVAL PRIOR TO APPLICATION<br>REFER TO PAINT NOTES BELOW |
| 119 | SOLID SURFACE | LG HAUSYS - VIATERA<br>COLOR: WHITE PEARL<br>2cm, FOR DRINK RAIL AND 3 cm TOP WITH 6 cm LAMINATED FRONT EDGE | FURNISHED AND INSTALLED BY CONTRACTOR.<br>BAR TOP, HOSTESS STANDS, TAKE-OUT COUNTER AND SIDE DINING WINE SERVICE CABINETS. |
| 120 | FT-1 | SPECIALTY TILE BY RANGO - 6" x 36" x 3/8"<br>COLOR: CAMBRIDGE OAK BROWN<br>(USE 9"X36" AT BAR DIE FLOOR REST AND RAISED SEATING STEP AT LOUNGE)<br>GROUT: LATICRETE #66 CHESTNUT BROWN | FLOOR TILE/ BAR FOOT REST<br>[illegible] FURNISHED &, INSTALLED BY [illegible] |
| 121 | NOT USED | | |
| 122 | NOT USED | | |
| 123 | NOT USED | | |
| 124 | WALK OFF MATT | TANDUS<br>ACCIDENTWEAVE PATTERNED LOOP [illegible]<br>MODULAR: 24" X 24"; POWERBA[illegible] | FURNISHED & INSTALLED BY G.C. |
| 125 | CARPET TILE | [illegible]LAND<br>[illegible] NAME: 1501 SOUND OFF<br>[illegible]: DUNMORE, 50105<br>[illegible]MART REFRESHFIBER TYPE 6,6 NYLON [illegible] FIBERS.<br>[illegible] MODULAR ADHESIVE No. 3200 | FURNISHED AND INSTALLED BY OWNER.<br>(INSTALL PATTERN: PATTERN BRICK, ASHLAR, QUARTER TURN) |
| 126 | BORDER/ WALL BASE-CAP | MASLAND<br>STYLE NA[illegible]604 ECHO<br>COLOR: [illegible]AB 50421<br>BROADLOOM [illegible]<br>MASLAND [illegible] ADHESIVE No. 3200 | FURNISHED AND INSTALLED BY OWNER. |
| 127 | [illegible] TRIM | [illegible]UM - RONDEC- STEP RS100ABGB39<br>[illegible] BRUSHED ANTIQUE BRONZE ANOD. ALUMINUM | FURNISHED & INSTALLED BY G.C.. |
| 128 | ST[illegible]ING | [illegible]CLOSING: GRADUS RH727 BLACK, WITH DOUBLE CHANNEL INSERT<br>INSERT: GRADUS XTRA GRIP, COLOR: CARBON NO. 85029 | NOSING FURNISHED AND INSTALLED BY OWNER. (SUPPLIER: INTERFACE) |
| 129 | F[illegible]ING TRANSITION STRIP | SCHLUTER - SCHIENE A 100AKB<br>FINISH: BRIGHT COPPER / BRONZE ANODIZED | FURNISHED AND INSTALLED BY CONTRACTOR AT TRANSITIONS:<br>- BETWEEN TILE AND CARPET FLOORING<br>- BETWEEN "WALK-OFF" CARPET AND DINING CARPET |
| 130 | STONE VENEER PANEL | NEXSTONE SANDY BUFF<br>CONTACT: STEPHANIE N. LAMBRUSCHINI<br>P: (303) 371-8222 F: (303) 371-8295<br>TOLL FREE: (866) 371-8232<br>SLamb@NextStone.Com<br>WWW.NEXSTONE.COM | PROVIDED BY MILLWORK VENDOR & INSTALLED BY GENERAL CONTRACTOR. |
| 200 | CUSTOM TRELLIS CEILING FRAMING | FINISH: TO MATCH FORMICA - 7481 - SB -NATURAL BIRCH (MATTE FINISH)<br>SIZE: VARIES | FURNISHED BY OWNER, INSTALLED BY G.C. |
| 201 | CEILING TILES | USG - FROST, ECLIPSE CLIMA PLUS No. SLT-76775 - 2' x 2' x ⅝"<br>COLOR: TALIPI 10'<br>GRID: GRID PROFILE A (DX/DXL). COLOR TO MATCH TILE. | FURNISHED & INSTALLED BY G.C.. |
| 202 | CEILING TILES | USG - FROST SL CLIMA PLUS No. 414 - 2' x 2' x ⅝"<br>COLOR: BENJAMIN MOORE #1001-NORTH CREEK BROWN<br>GRID: GRID PROFILE A (DX/DXL). COLOR TO MATCH TILE. | FURNISHED & INSTALLED BY G.C.. |
| 501 | RESIN PANELS | 3 - FORM - VARIA ECOWISN<br>STYLE : MINT RULE + MOSS (COLOR)<br>FINISH : FRONT - MINT RULE DIABOSS, BACK - PATENT<br>GAUGE : 14" | NOTE: BACK BAR INSERT BACK PANELS |
| PL-1 | H.P. LAMINATE | FORMICA #7481-58<br>NATURAL BIRCH | MILLWORK LAMINATE,<br>CUSTOM TRELLIS |
| PL-2 | H.P. LAMINATE | WILSONART #7948K-07<br>COLUMBIAN WALNUT | MILLWORK LAMINATE |
| WT-1 | SOLAR SHADES | WINDOW INTERIORS - SOLAR SHADES<br>PHIFER WEAVE - PHIFER 2590 OYSTER BEIGE, 5% OPENNESS | |
| WT-2 | CUSTOM FIXED WOOD VALANCE | ¾" PLYWOOD WITH FINISHED SURFACE<br>PAINT: P-6 | FURNISHED & INSTALLED BY G.C.. |
| WT-3 | NOT USED | | |

## INTERIOR PAINT SPECIFICATIONS:

UNLESS OTHERWISE NOTED, BENJAMIN MOORE PAINT SHALL BE USED ON ALL WALL SURFACES THAT ARE CURRENTLY PAINTED. CALL 1-800-236-6667 FOR LOCAL BEN MOORE DISTRIBUTOR INFORMATION. PAINT ORDER LINE: 877-623-8484. CONTACT NAME: LAURA HODGE AT (404) 904-1911 E: laura.hodge@benjaminmoore.com. CONTRACTOR SHOULD MENTION THAT PRODUCTS ARE BEING PURCHASED TO PAINT AN OLIVE GARDEN RESTAURANT IN ORDER TO RECEIVE A NATIONAL DISCOUNT.

FOR ALL GLAZED FINISH WALLS, PRIME ALL SURFACES WITH 1 COAT AURA MATTE PAINT PRIOR TO APPLYING 2 COATS OF AURA PAINT PRODUCTS.

FOR ALL OTHER WALLS, APPLY 2 COATS OF AURA PAINT PRODUCTS.

PLASTIC CORNER GUARDS & OTHER SIMILAR SURFACES - PRIME WITH XIM PRODUCTS "FLASH BOND PRIMER #400".

THESE DRAWINGS AND SPECIFICATIONS REMAIN THE PROPERTY OF THE DESIGN PROFESSIONAL. AUTHORIZED COPIES OF THESE DRAWINGS AND SPECIFICATIONS RETAINED BY THE CLIENT MAY BE UTILIZED ONLY FOR THEIR USE AND FOR OCCUPYING THE PROJECT FOR WHICH THEY WERE PREPARED, AND NOT FOR THE CONSTRUCTION OF ANY OTHER PROJECT. AUTHORIZED USE OF THESE DRAWINGS IS STRICTLY PROHIBITED.

Hammond GROUP PA
Architects
10556 Ivy Ln Overland Park, KS 66210 P: 913-231-1101 Fax: 913-231-1102 www.hmacprojectmanagement.com
ARCHITECTURE
INTERIOR DESIGN
CORPORATE PLANNING
MICHAEL A. HYDO
REGISTERED ARCHITECT
LICENSE No. 0-00000

ARCHITECT'S PROJECT #: 17-0341

olive garden
ITALIAN RESTAURANT

| Issue Date: | 04-26-2018 |
|---|---|
| REVISION INFORMATION | |
| 1 | |
| 2 | |
| 3 | |
| 4 | |
| 5 | |
| 6 | |
| 7 | |
| 8 | |

Restaurant #: 1173

P1B
(HIGH)

1711 GALLATIN RD NORTH

MADISON, TN

Drawing
DETAILS/ FINISH SCHEDULE

A8.1

Order Plans @ WWW.LDLine.com