1 REFRIGERATION SPECIFICATIONS: GENERAL

1.1 DEFINITION OF TERMS

1.1.1 "CONTRACTOR" SHALL MEAN THE REFRIGERATION INSTALLATION CONTRACTOR.

1.1.2 "OWNER" IS PUBLIX SUPER MARKETS, INC.

1.1.3 "MANUFACTURER" SHALL MEAN THE COMPANY OR COMPANIES WHICH WILL SUPPLY VARIOUS EQUIPMENT SUCH AS MECHANICAL CENTERS, CASES, WEATHERPACS, COILS, CONDENSERS, ETC.

1.1.4 "REFRIGERATION INSTALLATION" SHALL MEAN THE NECESSARY LABOR AND ALL PARTS AND ACCESSORIES NECESSARY TO COMPLETE THE WORK OUTLINED IN THIS SPECIFICATION.

1.2 SCOPE OF WORK

1.2.1 THE SPECIFICATIONS ARE INTENDED TO COVER THE INSTALLATION OF MECHANICAL CENTERS, CONDENSERS, COILS, CASES, CONDENSING UNITS AND ALL OTHER FITTINGS, DEVICES AND ACCESSORIES REQUIRED TO COMPLETE THE REFRIGERATION SYSTEMS AS SHOWN OR CALLED FOR ON THE REFRIGERATION PLANS AND SCHEDULES.

1.2.2 THE CONTRACTOR SHALL ALSO BE RESPONSIBLE FOR THE COMPLETE PIPING INSTALLATION OF ALL SPLIT A/C SYSTEMS.

1.2.3 THE OMISSION FROM THESE SPECIFICATIONS OR FROM THE REFRIGERATION PLANS AND SCHEDULES OF EXPRESS REFERENCE TO ANY PARTS NECESSARY FOR THE COMPLETE INSTALLATIONS IS NOT TO BE CONSTRUED AS RELEASING THE CONTRACTOR FROM THE RESPONSIBILITY FOR FURNISHING SUCH PARTS.

1.2.4 FOR DETAILS OF INSTALLATION REFER TO THE REFRIGERATION PLAN, REFRIGERATION SCHEDULE, EQUIPMENT/FLOOR PLAN, PLUMBING PLAN, ELECTRICAL PLAN, AIR CONDITIONING PLAN, MANUFACTURER'S INSTALLATION INSTRUCTIONS AND TO APPLICABLE CODES AND ORDINANCES.

1.3 FEES, PERMITS, LICENSES AND INSURANCE

1.3.1 ALL NECESSARY PERMITS AND LICENSES INCIDENT TO THE WORK AND REQUIRED BY LOCAL ORDINANCE SHALL BE SECURED AND PAID FOR BY THE CONTRACTOR. ALL EQUIPMENT SHALL BE INSTALLED IN STRICT COMPLIANCE WITH ALL LOCAL BUILDING CODES AND ORDINANCES.

1.4 THE FOLLOWING ITEMS WILL BE FURNISHED BY OWNER AND SET IN PLACE, INSTALLED AND CONNECTED BY THE CONTRACTOR (EXCEPT FOR ELECTRICAL CONNECTIONS WHICH SHALL BE MADE BY THE ELECTRICAL CONTRACTOR ON THE JOB). THESE ITEMS MAY BE DESIGNATED OFCI (OWNER FURNISHED, CONTRACTOR INSTALLED) WHEN REFERENCED IN THE DOCUMENTS:
- PRE-MANUFACTURED MECHANICAL CENTERS
- REFRIGERATED DISPLAY CASES
- SELF-CONTAINED REFRIGERATED EQUIPMENT (CASES & ICE MACHINES)
- EVAPORATOR COILS
- REMOTE CONDENSERS
- MEAT CUTTING ROOM AND SEAFOOD PREP CEILINGS IN REMODELS

1.5 ALL WALK-IN COOLERS, FREEZERS AND SHELVING WILL BE FURNISHED, SET IN PLACE AND INSTALLED BY OWNER AND CONNECTED BY CONTRACTOR (EXCEPT FOR ELECTRICAL CONNECTIONS WHICH WILL BE MADE BY THE ELECTRICAL CONTRACTOR).

1.6 THE REFRIGERATION SYSTEM SHALL BE INSTALLED BY THE CONTRACTOR AS PER THE "R" SHEETS. THESE PLANS ARE USED AS A REFERENCE GUIDE AND ANY DEVIATIONS TO IMPROVE A SITUATION SHALL BE BY WRITTEN OR VERBAL APPROVAL FROM THE PUBLIX REFRIGERATION COORDINATOR OR REFRIGERATION SUPERVISOR BEFORE IMPLEMENTATION OF THE CHANGE.

1.7 MATERIAL APPROVAL

1.7.1 THE CONTRACTOR SHALL PROVIDE PRODUCT SPECIFICATIONS FOR MATERIALS THAT ARE DIFFERENT FROM THE PUBLIX APPROVED MATERIALS. SPECIFICATIONS SHALL BE SUBMITTED TO THE PUBLIX REFRIGERATION COORDINATOR OR DESIGN DEPARTMENT FOR APPROVAL.

1.8 QUALITY ASSURANCE

1.8.1 SHALL COMPLY WITH ASHRAE 15 "SAFETY CODE FOR REFRIGERATION SYSTEMS" THE INTERNATIONAL MECHANICAL CODE AND FLORIDA MECHANICAL CODE CHAPTERS ON REFRIGERATION, AND ASME B 31.5 "REFRIGERATION PIPING AND HEAT TRANSFER COMPONENTS"

1.9 SCHEDULING

1.9.1 THE CONTRACTOR SHALL ATTEND ALL COORDINATION MEETINGS WITH THE GENERAL CONTRACTOR OF THE JOB.

1.9.2 THE GENERAL CONTRACTOR WILL SET THE PROJECT TIMELINE AND THE CONTRACTOR SHALL FOLLOW AND COORDINATE THE REFRIGERATION INSTALL WITH THE GENERAL CONTRACTOR TO ENSURE THE JOB IS COMPLETED ON TIME.

1.9.3 CONTRACTOR SHALL ADHERE TO ALL RULES AND SCHEDULING OF THE GENERAL CONTRACTOR. IF ANY CONFLICTS, INTERFERENCE OR DISCREPANCIES COME TO THE ATTENTION OF THE CONTRACTOR, HE SHALL NOTIFY THE DIVISIONAL FACILITY SERVICE REFRIGERATION COORDINATOR IMMEDIATELY BEFORE PROCEEDING ANY FURTHER WITH THE INSTALLATION.

1.9.4 REFRIGERATION INSTALLING TEAM AND PUBLIX REFRIGERATION COORDINATORS SHALL HAVE A PRE-JOB MEETING WHICH SHALL INCLUDE THE FOLLOWING AGENDA ITEMS:
- REVIEW PLANS AND SPECIFICATIONS
- COORDINATE INSTALL SCHEDULE WITH THE GENERAL PROJECT
- JOB SITE SAFETY
- QUALITY OF THE INSTALLATION
- ROOF AWARENESS
- FLOOR CARE
- EQUIPMENT CARE
- COMMON OMISSIONS
- PUNCH LIST PROCESS
- EVACUATION AND START-UP PROCESS
- VARIOUS INSTALLATION METHODS
- QUESTION AND ANSWERS

1.10 DELIVERY, STORAGE AND HANDLING

1.10.1 THE CONTRACTOR:

SHALL ACCEPT DELIVERY AND UNLOAD ALL OWNER FURNISHED CONTRACTOR INSTALLED EQUIPMENT AND MATERIAL.

SHALL INSPECT EQUIPMENT AND REPORT ALL SHORTAGES OF PARTS UPON DELIVERY IN WRITING AND SUBMIT TO THE PUBLIX FACILITY SERVICE REFRIGERATION COORDINATOR.

SHALL REPORT ALL DAMAGED EQUIPMENT RECEIVED FROM MANUFACTURER IN WRITING AND SUBMIT TO THE FACILITY SERVICE REFRIGERATION COORDINATOR. FAILURE TO FOLLOW THIS PROCESS MAY RESULT IN THE DAMAGE BEING THE CONTRACTOR'S RESPONSIBILITY.

SHALL MANAGE ALL PARTS THAT BELONG TO THE RELATED REFRIGERATION EQUIPMENT THROUGHOUT THE LIFE OF THE INSTALLATION OF THE JOB.

SHALL PROVIDE ONSITE SECURED STORAGE SUCH AS LOCKING TRAILER FOR TOOLS, EQUIPMENT AND MATERIALS NEEDED TO INSTALL THE REFRIGERATION EQUIPMENT. THE GENERAL CONTRACTOR WILL BE RESPONSIBLE FOR THE JOBSITE SECURITY.

COPPER TUBING AND FITTINGS SHALL BE SHIPPED AND HANDLED TO PROTECT AGAINST DAMAGE. ON THE JOB SITE IT SHALL BE PROTECTED AGAINST DAMAGE, MOISTURE, AND DIRT.

1.11 PROJECT/SITE CONDITIONS

1.11.1 THE CONTRACTOR SHALL INSTALL ALL REFRIGERATED EQUIPMENT IN STRICT COMPLIANCE WITH THE LOCAL BUILDING CODES AND ORDINANCES.

1.12 WARRANTY

1.12.1 THE CONTRACTOR:

SHALL CHARGE REFRIGERATION RACKS TO A LEVEL OF 10% AT FULL OPERATION BEFORE WARRANTY WILL BEGIN. SEE 3.9.1 FOR CHARGING INSTRUCTIONS.

SHALL REPLACE ALL REFRIGERANT LOST IN THE FIRST FULL YEAR OF THE WARRANTY.

SHALL PROVIDE EMERGENCY SERVICE AND MAINTENANCE AS DEFINED BY THE PUBLIX SERVICE AGREEMENT DURING THE WARRANTY PERIOD.

SHALL WARRANTY THE INSTALLATION FROM THE DATE THE STORE OPENS FOR BUSINESS, FOR ONE FULL CALENDAR YEAR.

SHALL NOT REPAIR OR REPLACE ANY EQUIPMENT THAT IS RECEIVED DAMAGED FROM THE MANUFACTURER WITHOUT THE MANUFACTURERS' REPRESENTATIVES' APPROVAL.

1.12.2 THERE SHALL BE A WARRANTY WALK THROUGH WHICH WILL INCLUDE THE CONTRACTOR, MANUFACTURER'S REPRESENTATIVE AND A PUBLIX REFRIGERATION COORDINATOR, 15 DAYS SUBSEQUENT TO THE WARRENTY EXPIRING.

1.12.3 WARRANTY SHALL NOT EXPIRE UNTIL ALL ITEMS ON WARRANTY WALK THRU ARE COMPLETED.

2 PRODUCTS

2.1 PIPING AND FITTINGS

2.1.1 FOR NON R744 (CO_2) REFRIGERATION SYSTEMS, SPLIT SYSTEM DX AIR CONDITIONING, AND DX HEAT RECLAIM PIPING; THE PIPING SHALL BE SEAMLESS DRAWN COPPER TUBE, ASTM B280 TYPE ACR, MANUFACTURED IN THE USA.

FOR R744 (CO_2) REFRIGERATION SYSTEMS, PIPING (INCLUDING FITTINGS) FOR REFRIGERATED FIXTURES SHALL BE MUELLER INDUDSTRIES TYPE L (NO SUBSTITUTIONS ARE PERMITTED WITHOUT WRITTEN APPROVAL FROM MANUFACTURER) WITH A MAXIMUM SIZE OF 2-1/8.

2.1.2 SECONDARY CHILLED GLYCOL AND HYDRONIC HEATING SYSTEM PIPING SHALL BE SEAMLESS DRAWN COPPER TUBE, ASTM B280 TYPE ACR, MANUFACTURED IN THE USA.

2.1.3 APPROVED MANUFACTURERS:
- MUELLER INDUSTRIES
- CERRO FLOW PRODUCTS

2.1.4 FITTINGS SHALL BE WROUGHT COPPER, ASTM B16.22, MANUFACTURED IN THE USA.

2.1.5 COPPER AND COPPER ALLOY PRESS FITTINGS ARE APPROVED FOR SECONDARY CHILLED GLYCOL PIPING SYSTEMS. FITTINGS SHALL CONFORM TO MATERIAL REQUIREMENTS OF ASME B16.18 OR ASME B16.22 AND PERFORMANCE CRITERIA OF IAPMO PS 117. SEALING ELEMENTS FOR PRESS FITTINGS SHALL BE EPDM. SEALING ELEMENTS SHALL BE FACTORY INSTALLED BY FITTING MANUFACTURER.

2.1.6 APPROVED MANUFACTURERS FOR PRESS FITTINGS:
- VIEGA

2.1.7 T-DRILL PULLED FITTINGS ARE APPROVED.

2.2 BRAZING AND SOLDERING ALLOYS

2.2.1 BRAZED COPPER JOINTS SHALL BE BRAZED WITH AN ALLOY NOT LESS THAN 15% SILVER CONTENT. ALLOYS SHALL MEET ANSI/AWS A5.8. (DX PIPING)

2.2.2 COPPER JOINTS BRAZED TO BRASS OR STEEL SHALL BE MADE WITH A BRAZING ALLOY WITH A MINIMUM SILVER CONTENT OF 45%. (DX PIPING)

2.2.3 SOLDERED COPPER JOINTS SHALL BE WITH AN ALLOY NOT LESS THAN 5% SILVER CONTENT. SOLDERED FILLER METALS SHALL BE ASTM B 32, LEAD FREE ALLOYS. PROVIDE WATER SOLUABLE FLUX MEETING ASTM B 813. (SECONDARY CHILLED GLYCOL PIPING)

2.2.4 THE FOLLOWING MANUFACTURERS ARE APPROVED:
- SIL-FOS
- SILVALOY (WOLVERINE JOINING TECHNOLOGIES)
- HARRIS PRODUCTS GROUP

2.3 PRESS FITTINGS FOR SECONDARY CHILLED GLYCOL PIPING

2.3.1 JOINTS SHALL BE PRESSED USING ONLY THE FITTINGS AND TOOLS OF THE A[illegible] MANUFACTURER.

2.4 VALVES

2.4.1 SUPERIOR VALVES ARE THE APPROVED BRAND FOR ALL REFRIGERATION VALVES USED [illegible] NEW CONSTRUCTION, REMODELS AND/OR RETROFITS.

2.4.2 APPROVED ALTERNATE MANUFACTURERS:
- HENRY VALVES
- MUELLER
- SPORLAN

2.5 REFRIGERATION PIPE INSULATION SHALL BE AS FOLLOWS:

2.5.1 INSULATION SHALL BE A FLEXIBLE, CLOSED CEL[illegible] ASTOMERIC PIPE INSULATION: FORMALDEHYDE FREE, LOW VOC'S, FIBER FREE, DUST FREE AND RES[illegible] AND MILDEW. THE INSULATION SHALL CONFORM TO ASTM C 534 GRADE 1, TYPE I. 25/50 FLAME [illegible] SMOKE DEVELOPED INDEX.

2.5.2 APPROVED MANUFACTURERS:
- ARMACELL - AR[illegible] - BASIS OF DE[illegible]
- AEROCELL
- K-FLEX [illegible]UL-TUBE

2.5.3 REFRIGERATION PIPING INSULATION THICKNESS REQUIREMENTS:
- LOW [illegible]PERATURE (LT) SUCTION LINES USE 1 1/2"
- SUB [illegible] LIQUID LINES USE 1"
- MEDIUM [illegible]ERATURE (MT) SUCTION LINES USE 1 1/2"
- HIGH [illegible]ATURE (A/C) SUCTION LINES USE 1 1/2"
- REFRIG[illegible] HEAT RECLAIM LINES USE 1"

2.5.4 [illegible]ORATOR D[illegible] WITH 1/2" THICK INSULATION FROM COIL TO DRAIN

2.5.5 INSU[illegible] EXPOSED TO [illegible] PIPING TO ISLAND CASES SHALL NOT HAVE DUCT TAPE. ALL JOINTS [illegible] GLUED USING THE MANUFACTURERS ADHESIVE. ADHESIVE EQUAL TO ARMAFLEX 520.

2.5.6 INSULATI[illegible] TO OUTDOOR CONDITIONS SHALL BE WRAPPED WITH ARMATUFF PLUS II PIPE COVERING [illegible] BY ARMACELL. ALTERNATE TO LAMINATE WRAP: K-FLEX CLAD AL TUBE.

2.5.7 REINSUL[illegible] OF PIPING IN REMODELS SHALL MATCH THE THICKNESS OF THE EXISTING PIPING [illegible]N.

2.6 SE[illegible] CHILLED GLYCOL PIPE INSULATION SHALL BE AS FOLLOWS:

2.6.1 INSULATION SHALL BE RIGID CLOSED-CELL CELLULAR GLASS PIPE INSULATION: INORGANIC, CFC AND HCFC FREE, INCOMBUSTIBLE, MOISTURE AND VERMIN RESISTANT. THE INSULATION SHALL CONFORM TO ASTM C-552.

2.6.2 THE FOLLOWING ARE APPROVED MANUFACTURERS: PITTSBURG CORNING - FOAMGLAS

2.6.3 MEDIUM TEMPERATURE SECONDARY CHILLED GLYCOL REFRIGERATION SUPPLY AND RETURN LINE INSULATION THICKNESS REQUIREMENTS:
- FOR PIPE SIZES 3/4"-1-1/2" USE 1 1/2"
- FOR PIPE SIZES 2"-6" USE 2"

2.6.4 INSULATION SHALL BE PROTECTED BY A FIELD APPLIED JACKET & VAPOR BARRIER.

2.7 ALL REFRIGERATED DISPLAY CASES AND CONDENSING UNITS SHALL BE OWNER FURNISHED, CONTRACTOR INSTALLED.

2.8 ALL BAKERY DISPLAY CASES SHALL BE OWNER FURNISHED, CONTRACTOR INSTALLED.

2.9 ALL WALK-IN COOLERS, FREEZERS AND REFRIGERATED PREP ROOMS SHALL BE OWNER FURNISHED, OWNER INSTALLED ON NEW STORES AND OWNER FURNISHED, CONTRACTOR INSTALLED ON REMODELS.

2.10 ALL EVAPORATORS AND CONDENSERS SHALL BE OWNER FURNISHED, CONTRACTOR INSTALLED.

2.11 REFRIGERANT & SECONDARY CHILLED GLYCOL

2.11.1 REFRIGERANT, OIL, PROPYLENE GLYCOL, AND DISTILLED WATER SHALL BE PER THE REFRIGERATION LEGENDS AND MANUFACTURED IN THE USA. DEILIVERED TO THE SITE AND STORED IN SEALED CONTAINERS. AS STANDARD, PROPYLENE GLYCOL SHALL INCLUDE A BLUE DYE.

2.11.2 PUBLIX SHALL PROVIDE ALL REFRIGERANT AND PROPYLENE GLYCOL NECESSARY FOR A COMPLETE REFRIGERATION INSTALLATION IN NEW STORES AND REMODELS WITH NEW REFRIGERATION RACKS.

2.11.3 PUBLIX SHALL PROVIDE ALL REFRIGERANT AND GLYCOL NECESSARY FOR A COMPLETE A/C SPLIT INSTALLATION IN NEW STORES AND REMODELS.

2.11.4 REFRIGERATION CONTRACTOR SHALL PROVIDE ALL REFRIGERANT NECESSARY FOR A COMPLETE INSTALLATION IN REMODELS WHEN EXISTING EQUIPMENT IS REUSED.

2.12 MATERIALS FURNISHED BY THE REFRIGERATION CONTRACTOR
- REFRIGERATION GRADE COPPER PIPE FOR ALL PIPE RUNS (TYPE ACR UNLESS OTHERWISE NOTED)
- POLYPROPYLENE PIPE SADDLES -WHITE -INSUGUARD OR COOPER B-LINE -SNAP'N SHEILD
- PIPE INSULATION INCLUDING GLUES
- COPPER FITTINGS (LONG RADIUS TYPE)
- PIPE HANGERS -(1 1/2" 14 GA UNISTRUT, 1 1/2" SUPERSTRUT) GALVANIZED
- 3/8" THREADED RODS FOR PIPE HANGERS
- ALL VALVES THAT ARE NOT INCLUDED IN THE MANUFACTURED EQUIPMENT (EXAMPLE RECLAIM VALVES)
- PVC PIPE FOR CASE DRAIN CONNECTIONS, FITTINGS AND GLUE
- 1/16" THICK VINYL TILE CUT 3" X 3" FOR SHIMS UNDER CASE
- HARDWARE
- WELDING SUPPLIES
- DRIP PANS
- CAULK
- NITROGEN
- DRAIN MATERIAL
- ALL OTHER MATERIALS TO COMPLETE THE INSTALLATION
- CONTROL PARTS FOR WALK-INS TO INCLUDE
  - ALL TEMPERATURE SENSORS: RETURN AIR (BOX TEMP)
  - DEFROST TERMINATION, AND PREP AREA WALL MOUNT SENSORS
  - INCLUDING ALL ACCESSORIES TO COMPLETE THE INSTALLATION

3 EXECUTION

3.1 PROTECTION OF ROOF

3.1.1 CONTRACTOR SHALL PROTECT THE ROOF FROM DAMAGE, PUNCTURES, CUTTING, BURNING, AND OIL SPILLS BY PLACING A 2" THICK FOAM BOARD WITH 1/2" PLYWOOD ON TOP OF FOAM, UNDER ALL EQUIPMENT SUCH AS TANKS, PUMPS, WELDERS, TEMPORARY REFRIGERATION RACKS AND OTHER EQUIPMENT THAT IS NEEDED TO INSTALL THE REFRIGERATION UNITS.

3.1.2 CONTRACTOR SHALL PROVIDE TRAINING AND INSTRUCTION TO THE INSTALLATION CREW ON PROPER CARE OF THE ROOF.

3.1.3 CONTRACTOR SHALL MAKE EVERY EFFORT TO DISTRIBUTE THE WEIGHT OF TEMPORARY EQUIPMENT, TOOLS, AND REFRIGERANT TANKS TO AVOID CONCENTRATED LOADS ON THE ROOF.

3.1.4 FAILURE TO PROTECT THE ROOF FROM DAMAGE CAUSED BY THE CONTRACTORS EQUIPMENT, TOOLS AND OTHER TRADE RELATED TASKS, MAY RESULT IN THE CONTRACTOR REPLACING THE ROOF AT THEIR EXPENSE.

3.2 INSTALLATION OF REFRIGERATION EQUIPMENT

3.2.1 SETTING CASES

3.2.1.1 CASES SHALL BE SET STRAIGHT, LEVEL AND PLUMB. USE ONLY 1/16" THICK VINYL TILE SHIMS CUT TO 3" X 3" SQUARES.

3.2.1.2 CASES SHALL NOT BE SLID ON FLOOR WHILE BEING SET. CONTRACTOR SHALL MAKE EVERY EFFORT TO PROTECT THE FLOOR FROM DAMAGE, STAINS, CHIPS, ETC DURING CASE SETTING

3.2.1.3 CASES SHALL BE SET AND SEALED WITH BUTYL SEALANT ONLY AND LOCKED TOGETHER WHEN SET IN PLACE.

3.2.1.4 ALL DOLLIES AND PRY BARS SHALL HAVE RUBBER WHEELS WHEN BEING USED TO SET CASES ON SALES FLOOR.

3.2.2 SETTING UNIT COOLERS AND MARKET COILS

3.2.2.1 FOLLOW MANUFACTURER'S MOUNTING INSTRUCTIONS AND DRAWING DETAILS.

3.2.2.2 MOUNT COILS LEVEL AND FOLLOW MANUFACTURER'S RECOMMENDATIONS FOR PLACEMENT AND CLEARANCE.

3.3 INSTALLATION OF PIPING

3.3.1 REFRIGERATION PIPING

3.3.1.1 INSTALL PIPING FREE OF SAGS, BENDS, AND KINKS.

3.3.1.2 PIPING SHALL NOT HAVE ANY 45 DEGREE ANGLES. ALL LINES MUST BE RUN AT RIGHT ANGLES OR PARALLEL TO BUILDING WALLS. DIAGONAL RUNS ARE PROHIBITED UNLESS SPECIFICALLY INDICATED OTHERWISE.

3.3.1.3 INSTALL PIPING TO ALLOW FOR SERVICE AND MAINTENANCE.

3.3.1.4 HORIZONTAL SUCTION LINES SHALL SLOPE 1/2" PER 10 FEET, TOWARD THE COMPRESSOR OR FOLLOW THE SLOPE OF THE ROOF.

3.3.1.5 HEAT RECLAIM PIPE SIZES ARE SHOWN ON THE REFRIGERATION SCHEDULE AND PLAN. LINES SHALL BE INSTALLED BY THE REFRIGERATION CONTRACTOR AND SHALL RUN WITH THE SLOPE OF THE ROOF OR SLOPED BACK TO THE COMPRESSOR RACK.

3.3.1.6 CONDENSER PIPING SHALL BE SLEEVED WITH PVC AT HANGERS AND CLAMPED.

3.3.1.7 PIPING SIZES SHALL BE SHOWN ON THE REFRIGERATION SHEETS. WHERE (2) TWO OR MORE COILS ARE CONNECTED TO ONE SYSTEM, THE SUCTION LINE MAY BE REDUCED BY ONE SIZE WHEN CONNECTING THE COILS.

3.3.2 SECONDARY CHILLED GLYCOL AND HYDRONIC HEATING SYSTEM PIPING

3.3.2.1 INSTALL PIPING FREE OF SAGS, BENDS, AND KINKS. ALLOWANCE FOR THERMAL EXPANSION AND CONTRACTION SHALL BE PROVIDED.

3.3.2.2 PIPING SIZES SHALL BE SHOWN ON THE REFRIGERATION SHEETS. PROVIDE ISOLATION VALVES AND INSTALL VALVE STATIONS AS INDICATED ON THE DRAWINGS.

3.3.2.3 PIPING SHALL NOT HAVE ANY 45 DEGREE ANGLES. ALL LINES MUST BE RUN AT RIGHT ANGLES OR PARALLEL TO BUILDING WALLS. DIAGONAL RUNS ARE PROHIBITED UNLESS SPECIFICALLY INDICATED OTHERWISE.

3.3.2.4 PIPE SIZES ARE SHOWN ON THE REFRIGERATION SCHEDULE AND PLAN. LINES SHALL BE INSTALLED BY THE REFRIGERATION CONTRACTOR AND SHALL RUN WITH THE SLOPE OF THE ROOF OR SLOPED BACK TO THE MACHINE ROOM OR PARALLEL TO THE ROOF JOISTS.

3.3.3 REFRIGERATION PIPING JOINING PROCEDURES

3.3.3.1 ALL PIPING SHALL BE CUT SQUARE TO THE TUBE.

3.3.3.2 ALL PIPING SHALL BE REAMED AND DE-BURRED BEFORE MAKING THE FINAL JOINT.

3.3.3.3 PIPES SHALL NOT BE CLEANED WITH SANDPAPER OR STEEL WOOL. PIPES SHALL ONLY BE CLEANED WITH THE PROPER CLOTH SUCH AS EMORY CLOTH OR EQUAL THAT IS DESIGNED FOR THAT PURPOSE.

3.3.3.4 TO ELIMINATE THE FORMATION OF COPPER OXIDE ON THE INSIDE OF THE TUBING, ALL AIR SHALL BE FLUSHED FROM THE LINES AND COMPONENTS BEFORE BRAZING AND A SLOW STREAM (2 CUBIC FEET PER HOUR) OF DRY NITROGEN MUST BE PASSED THROUGH THE TUBING WHILE BRAZING.

3.3.3.5 SYSTEM SHALL BE FLUSHED WITH NITROGEN STARTING FROM THE RACK OR CONDENSING UNIT END OF PIPE TOWARD THE CASE OR EVAPORATOR, BEFORE MAKING THE FINAL CONNECTION.

3.3.3.6 ANY PIPE FITTINGS, VALVES OR OTHER COMPONENTS BURNED OR EXPOSED TO EXCESSIVE HEAT SHALL BE REMOVED AND REPLACED.

3.3.3.7 PIPING INSTALLED WITHOUT NITROGEN FLOW SHALL BE REPLACED AT THE CONTRACTOR'S EXPENSE. PUBLIX MAY TEST CUT (2) TWO SAMPLES PER RACK.

3.3.4 SECONDARY CHILLED GLYCOL AND HYDRONIC HEATING SYSTEM PIPING JOINING PROCEDURES

3.3.4.1 ALL PIPING SHALL BE CUT SQUARE TO THE TUBE.

3.3.4.2 ALL PIPING SHALL BE REAMED AND DE-BURRED BEFORE SOLDERING THE FINAL JOINT.

3.3.4.3 PIPES SHALL NOT BE CLEANED WITH SANDPAPER OR STEEL WOOL. PIPES SHALL ONLY BE CLEANED WITH THE PROPER CLOTH SUCH AS EMORY CLOTH OR EQUAL THAT IS DESIGNED FOR THAT PURPOSE.

3.3.3.5 SYSTEM SHALL BE FLUSHED WITH NITROGEN STARTING FROM THE RACK OR CONDENSING UNIT END OF PIPE TOWARD THE CASE OR EVAPORATOR, BEFORE MAKING THE FINAL CONNECTION.

3.3.3.6 ANY PIPE FITTINGS, VALVES OR OTHER COMPONENTS BURNED OR EXPOSED TO EXCESSIVE HEAT SHALL BE REMOVED AND REPLACED.

3.3.3.7 PIPING INSTALLED WITHOUT NITROGEN FLOW SHALL BE REPLACED AT THE CONTRACTOR'S EXPENSE. PUBLIX MAY TEST CUT (2) TWO SAMPLES PER RACK.

3.3.4 SECONDARY CHILLED GLYCOL AND HYDRONIC HEATING SYSTEM PIPING JOINING PROCEDURES

3.3.4.1 ALL PIPING SHALL BE CUT SQUARE TO THE TUBE.

3.3.4.2 ALL PIPING SHALL BE REAMED AND DE-BURRED BEFORE SOLDERING THE FINAL JOINT.

3.3.4.3 PIPES SHALL NOT BE CLEANED WITH SANDPAPER OR STEEL WOOL. PIPES SHALL ONLY BE CLEANED WITH THE PROPER CLOTH SUCH AS EMORY CLOTH OR EQUAL THAT IS DESIGNED FOR THAT PURPOSE.

3.3.4.4 SOLDER WITH 95-5 NO-LEAD SOLDER AND WATER SOLUABLE FLUX. DEFECTIVE JOINTS SHALL BE DISMANTLED, CLEANED AND RESOLDERED. ALTERNATE: BRAZE WITH SILVER SOLDER.

3.3.4.5 ANY PIPE FITTINGS, VALVES OR OTHER COMPONENTS BURNED OR EXPOSED TO EXCESSIVE HEAT SHALL BE REMOVED AND REPLACED.

3.3.4.6 PRESS CONNECTIONS: COPPER AND COPPER ALLOY PRESS CONNECTIONS SHALL BE MADE IN ACCORDANCE WITH THE MANUFACTURER'S INSTALLATION INSTRUCTIONS. THE TUBING SHALL BE FULLY INSERTED INTO THE FITTING AND THE TUBING MARKED AT THE SHOULDER OF THE FITTING. THE FITTING [illegible] CHECKED AGAINST THE MARK ON THE TUBING TO ASSURE THE TU[illegible] FITTING. THE JOINTS SHALL BE P[illegible] THE TOOL(S) [illegible]URER.

3.3.5 HANGERS AND SUPPORTS

3.3.5.1 ALL HORIZONTAL [illegible] RUNS SHALL BE SUPPORTED AT 5' INTERVALS EXCEPT AT COMPRESSOR. DX PIPING SHALL BE [illegible]TED BY APPROVED PIPE SADDLES.

3.3.5.2 ALL VERTICAL RISERS [illegible] BE SUPPORTED AT 10' INTERVALS.

3.3.5.3 [illegible] OTHER TRADE SHALL [illegible]CH, WELD OR LIE ON THE REFRIGERATION HANGERS.

3.3.5.4 [illegible]ER SUPPORTS SHALL HAVE NUTS ON BOTH BOTTOM AND TOP SIDE OF STRUT MATERIAL

3.3.5.5 HANGERS SHALL ATTACH TO THE STRUCTURE AT THE TOP CHORD OF BAR JOISTS.

3.4 INSTALLATION OF PIPING INSULATION

3.4.1 REFRIGERATION PIPE INSULATION

3.4.1.1 ALL REFRIGERATION LINES SHALL BE INSULATED FROM EVAPORATOR TO SUCTION MANIFOLD.

3.4.1.2 ALL HEAT RECLAIM LINES SHALL BE INSULATED FROM HEAT RECLAIM COIL TO RACK.

3.4.1.3 ALL INSULATION TO BE GLUED PER MANUFACTURERS RECOMMENDED INSTALLATION PROCEDURE. AVOID STRETCHING OF PIPE INSULATION.

3.4.1.4 FOLLOW MANUFACTURERS SPECIFICATIONS FOR APPLYING PROTECTIVE LAMINATE FOR ALL INSULATED REFRIGERATION LINES EXPOSED TO SUNLIGHT.

3.4.1.5 REFRIGERANT PIPE SHALL BE SEALED WHILE SLIPPING ON INSULATION TO PREVENT FOREIGN MATTER FROM ENTERING THE TUBE.

3.4.1.6 INSULATION IS TO BE SLID ONTO PIPE; LONGITUDINAL SLITTING OF THE INSULATION IS NOT ALLOWED EXCEPT ON MITERED SECTIONS. INSULATION SHALL BE PUSHED ONTO PIPIE, NOT PULLED.

3.4.1.7 INSULATION SHALL BE MITERED, PRE-ADHERED AND LONGITUDINALLY SLIT INSIDE THROAT TO FIT OVER ALL P-TRAPS, TEES AND 90° ELBOWS.

3.4.1.8 ALL BUTT JOINTS AND MITERED SEAMS SHALL BE ADHERED WITH FULL COVERAGE OF ADHESIVE ON BOTH SURFACES. INSULATION SHALL NOT BE STRETCHED WHEN ADHERING.

3.4.1.9 INSULATION MUST BE INSTALLED IN AN ADEQUATELY VENTILATED AREA. IT MAY BE NECESSARY TO INCREASE INSULATION THICKNESS IF ADEQUATE VENTILATION IS NOT PRESENT, DO NOT CROWD THE INSULATION, ALLOW FOR ADEQUATE AIR MOVEMENT.

3.4.1.10 AT THE BEGINNING, AT EVERY 12 TO 18 FEET, AND AT THE ENDS OF PIPING RUNS, THE INSULATION SHALL BE ADHERED DIRECTLY TO THE COPPER USING A 2" STRIP OF ADHESIVE. INSULATION SHOULD NOT BE ADHERED TO THE PIPE AT THE EXTREME LOW POINTS IN ANY PIPING RUN.

3.4.2 SECONDARY CHILLED GLYCOL SYSTEM PIPE INSULATION

3.4.2.1 ALL LINES SHALL BE INSULATED FROM THE COILS TO THE PUMP STATION FLANGES.

3.4.2.2 ALL HEAT RECLAIM LINES SHALL BE INSULATED FROM HEAT RECLAIM COIL TO THE PUMP STATION FLANGES.

3.4.2.3 CLEAN AND DRY SURFACES TO RECEIVE INSULATION. REMOVE MATERIALS THAT WILL ADVERSELY AFFECT INSULATION APPLICATION.

3.4.2.4 APPLY INSULATION WITH THE LEAST NUMBER OF JOINTS PRACTICAL. APPLY INSULATION WITH TIGHT SEAMS AND END JOINTS. BOND SEAMS AND JOINTS WITH MANUFACTURER RECOMMENDED ADHESIVE.

3.4.2.5 AT INSULATION TERMINATIONS SEAL ENDS WITH A MANUFACTURER RECOMMENDED COMPOUND TO MAINTAIN VAPOR BARRIER.

3.5 DRAINS

3.5.1 ALL CASE DRAINS SHALL BE INSTALLED BY CONTRACTOR.

3.5.2 CASE DRAINS SHALL BE SCHEDULE 40 PVC AND SHALL HAVE A RUNNING TRAP WHICH IS SUPPLIED BY CASE MANUFACTURER.

3.5.3 ALL WALK-IN COOLERS, FREEZERS AND MARKET COIL DRAINS AND TRAPS SHALL BE 3/4" COPPER PIPE INSTALLED AND INSULATED BY THE CONTRACTOR.

3.6 LUBRICATION

3.6.1 BEFORE ANY MOTORS AND/OR COMPRESSORS ARE TO BE OPERATED, THE LUBRICATION SHALL BE CHECKED AND OIL OR GREASE ADDED WHERE NECESSARY.

3.6.2 THE SYSTEM OIL LEVEL SHALL BE ADJUSTED TO THE FACTORY'S RECOMMENDATIONS.

3.7 PRESSURE TESTING THE SYSTEM

3.7.1 CONTRACTOR SHALL NOTIFY THE FACILITY SERVICE REPRESENTATIVE 24 HOURS IN ADVANCE WHEN OR MORE SYSTEMS WILL BE READY TO TEST.

3.7.2 THE FOLLOWING IS THE APPROVED PRESSURE TEST PROCEDURE UPON COMPLETION OF THE REFRIGERATION CONNECTIONS:

3.7.2.1 SET ALL VALVES IN OPEN POSITION

3.7.2.2 ALL JOINTS SHALL BE CAREFULLY TESTED FOR LEAKS WITH A HALIDE TORCH OR AN ELECTRONIC LEAK DETECTOR.

3.7.2.3 LEAKS SHALL BE MARKED AND REPAIRED. UPON COMPLETION OF REPAIR, REPEAT PRESSURE TEST AND NOTIFY FACILITY SERVICE REPRESENTATIVE FOR APPROVAL.

3.7.2.4 ALL REFRIGERATION PIPING, CONDENSING UNITS, CONDENSERS AND REHEAT COILS, AFTER COMPLETION OF INSTALLATION, SHALL BE PRESSURIZED WITH A MIXTURE OF REFRIGERANT AND NITROGEN TO 175 LB OF PRESSURE PER SQ. INCH, LEAK CHECKED AND MAINTAINED UNDER THAT PRESSURE FOR AT LEAST A 24 HOUR PERIOD, BEFORE EVACUATION PROCESS SHALL BEGIN.

3.7.3 THE FOLLOWING IS THE APPROVED PRESSURE TEST PROCEDURE UPON COMPLETION OF THE SECONDARY CHILLED GLYCOL CONNECTIONS.

3.7.3.1 LEAVE JOINTS UNINSULATED AND EXPOSED FOR EXAMINATION DURING TEST.

3.7.3.2 FLUSH SECONDARY CHILLED GLYCOL AND HYDRONIC HEATING LINES WITH CLEAN WATER, THEN REMOVE AND CLEAN OR REPLACE STRAINERS OR SCREENS.

3.7.3.3 ISOLATE EQUIPMENT FROM PIPING DURING PRESSURE TEST.

3.7.3.4 WHILE FILLING SYSTEM USE VENTS AT HIGH POINTS TO RELEASE AIR.

3.7.3.5 PRESSURE TEST TO 1.5 TIMES THE SYSTEM WORKING PRESSURE.

3.7.3.6 LEAKS SHALL BE MARKED AND REPAIRED. UPON COMPLETION OF REPAIR, REPEAT PRESSURE TEST AND NOTIFY FACILITY SERVICE REPRESENTATIVE FOR APPROVAL.

3.7.3.7 DRAIN AND PROCEDE TO 3.9.2

3.8 EVACUATION

3.8.1 ALL REFRIGERATION SYSTEMS (EXCEPT GLYCOL SYSTEMS) SHALL BE EVACUATED WITH AN APPROVED MANUFACTURED VACUUM PUMP WITH A MINIMUM PUMP DISPLACEMENT OF 8 CFM.

3.8.2 ALL SYSTEMS SHALL BE EVACUATED (3) THREE TIMES. THE FIRST (2) TWO EVACUATIONS TO 500 MICRONS ABSOLUTE PRESSURE. THE FINAL EVACUATION SHALL BE BROUGHT DOWN TO 200 MICRONS ABSOLUTE PRESSURE.

3.8.3 THE FIRST (2) TWO EVACUATIONS SHALL BE BROKEN WITH DRY NITROGEN.

3.8.4 ALL VACUUMS SHALL BE MEASURED WITH AN ELECTRONIC VACUUM GAUGE OR OTHER SUITABLE VACUUM INDICATOR THAT CAN BE READ ACCURATELY BELOW 200 MICRONS. RECOMMENDED TYPES ARE "TELEVAC" OR "AIRSERCO".

3.8.5 THE FINAL VACUUM SHALL BE PROVEN BY HOLDING IT AT LEAST ONE HOUR AT A MINIMUM OF 200 MICRONS AND NO RISE OF MORE THAN 100 MICRONS TO EXCEED THE 200 MICRON MINIMUM FOR THAT HOUR. CERTIFICATION SHALL BE BY PUBLIX FACILITY SERVICE REFRIGERATION COORDINATOR.

3.8.6 THE FINAL EVACUATION SHALL BE BROKEN WITH REFRIGERANT CHARGED THROUGH A DRYER. A 20 CUBIC INCH DRYER SHALL BE USED FOR CHARGING 145 POUNDS OF REFRIGERANT.

3.8.7 FOR R-744 SYSTEMS, WITH ALL ISOLATION VALVES OPEN, INCLUDING COMPRESSOR SERVICE VALVES, CHARGE WITH VAPOR ONLY TO 150 PSIG. COMPRESSOR SERVICE VALVES SHALL BE CLOSED AND CHARGING WITH VAPOR SHALL CONTINUE TO 250 PSIG. REFER TO HILLPHOENIX INSTALLATION GUIDE FOR COMPLETE DETAILS.

3.9 CHARGING

3.9.1 WITH ALL COMPRESSORS LOCKED ON, ALL CASES AT TEMPERATURE AND HEAT RECLAIM ENERGIZED FOR 10 MINUTES, REFRIGERANT LEVEL MUST BE AT 10% OF RECEIVER CAPACITY.

3.9.2 SECONDARY CHILLED GLYCOL SYSTEM AND HYDRONIC HEATING CHARGING - MIX PROPYLENE GLYCOL 35% & DISTILLED WATER 65% PER THE MANUFACTURERS INSTRUCTIONS. VENT AIR FROM SYSTEM.

3.9.3 FOR SECONDARY R-744 SYSTEMS, THE SYSTEM SHALL BE CHARGED TO A LEVEL OF 80% IN THE LIQUID VAPOR SEPARATOR. REFER TO MANUFACTURER'S INSTALLATION GUIDE FOR COMPLETE DETAILS.

3.10 START-UP AND ADJUSTMENTS

3.10.1 SUCTION FILTER CORES SHALL BE REMOVED AFTER UNITS HAVE BEEN RUNNING FOR (3) THREE WEEKS THE REFRIGERATION CONTRACTOR SHALL CHECK AND REPLACE THE OIL FILTER AT THIS TIME.

3.10.2 UPON COMPLETION OF THE REFRIGERATION INSTALLATION, THE CONTRACTOR SHALL:
CHECK ALL ELECTRICAL CIRCUITS
- SET PRESSURE CONTROLS
- SET TEMPERATURES
- SET & RECORD DEFROST TIMES AND CONTROLS
- SET SUPERHEAT ON ALL EXPANSION VALVES
- ESTABLISH CORRECT REFRIGERANT LEVEL FOR EACH SYSTEM
- TAG ALL VALVES
- LABEL CASES WITH SYSTEM NUMBERS
- MARK ALL CONTROLS
- PROVIDE SYSTEM START-UP AND COMPLETE CHECK OF ALL SYSTEM COMPONENTS.

3.10.3 THE CONTRACTOR SHALL PROVIDE A PERMANENT DATA SHEET FOR EACH RACK THAT SHALL INCLUDE BUT IS NOT LIMITED TO THE FOLLOWING:
- REFRIGERANT AND WEIGHT OF CHARGE
- PRESSURE CONTROL SETTINGS
- DEFROST CONTROL SETTINGS
- TEMPERATURE SETTINGS
- SUPERHEAT SETTINGS

DATA SHEETS SHALL BE LOCATED IN MANUFACTURER'S DEDICATED POCKET IN THE CONTROL CABINET.

3.10.4 BEFORE STARTING OF SECONDARY CHILLED GLYCOL AND HYDRONIC HEATING SYSTEMS:
- INSPECT PUMPS FOR PROPER ROTATION.
- SET MAKE UP PRESSURE REDUCING VALVES FOR REQUIRED SYSTEM PRESSURE.
- INSPECT AIR VENTS AND DETERMINE IF ALL ARE INSTALLED AND OPERATING.

3.11 CLEANING

3.11.1 THE CONTRACTOR SHALL ARRANGE FOR THE REMOVAL OF CRATING AND PACKING MAT[illegible] SHALL LEAVE THE UNCRATING AREA, THE COMPRESSOR ROOMS AND MECHANICAL CENTERS CL[illegible] AND NEAT. CLEAN JOB SITE DAILY.

3.11.2 CONTRACTOR SHALL LEAVE ROOF CLEAN AND IN GOOD CONDITION.

3.11.3 NO STORAGE IS ALLOWED IN MECHANICAL CENTER, WALK-IN[illegible] FREEZERS.

3.12 ORDER OF WORK

3.12.1 WALK-IN ARRIVAL
(1) ONE WEEK - ALL WALK-INS ARE IN[illegible]S PREPIPED AND HUNG A[illegible]MPLETE.
ALL EVAPORATOR COILS [illegible] BE PREPIPED ON THE F[illegible]T INTO [illegible]IR RESPECTIVE LOCAT[illegible]

3.12.2 (1) ONE WEEK PRIO[illegible] ARRIVAL:
- ALL OVERHEAD [illegible]G SHALL BE 100% COMPLE[illegible]
- ALL WALK-INS SH[illegible] BE PIPED
- ALL HEAT RECLAIM [illegible]PING SHALL BE COMPLETE.
- ALL CONDENSER P[illegible]G SHALL BE COMPLETE.
- ALL SYSTEMS SHAL[illegible] PRESSURIZED.

3.12.3 [illegible] CASES ARRIVE:
[illegible]EEK -ALL CASES SHA[illegible] SET
[illegible]S -ALL DRAINS, T[illegible] SHALL BE INSTALLED AND PIPING IN PROGRESS
(3) [illegible] -ALL CASES S[illegible] BE PIPED AND PRESSURE TESTING IN PROGRESS
(4) FO[illegible] ACUATIONS [illegible]LL BE COMPLETED AND START-UP IN PROGRESS.
(5) FIV[illegible]TS SHAL[illegible] RUNNING AND ADJUSTMENTS COMPLETE.

3.12.4 STORE [illegible]NING:
[illegible]NTRACTO[illegible]SENT AT THE STORE ONE CONTINUOUS WEEK BEFORE THE STORE [illegible]ENING DAY, A[illegible]Y AFTER STORE OPENING.

3.12.5 PUNCH LIS[illegible]
[illegible] LIST SHALL BE CO[illegible]ED BY STORE OPENING DATE.

3.12.6 [illegible] OUT:
[illegible]ERATION CONTRACTOR AND PUBLIX REFRIGERATION COORDINATOR SHALL CONDUCT A [illegible]T DEBRIEFING (1) ONE WEEK AFTER PROJECT IS COMPLETE AND OPENED. AGENDA FOR [illegible]RIEFING SHALL CONSIST OF, BUT NOT LIMITED TO THE FOLLOWING ITEMS:
- PLAN AND SPECIFICATION ERRORS AND OMISSIONS
- PROJECT COMPLICATIONS
- PUNCH LIST REVIEW
- TIMELINE REVIEW -COMPARISON OF THE PROJECTED TIMELINE AND ACTUAL TIMELINE
- OPPORTUNITIES FOR IMPROVEMENT
- PROJECT SUCCESS RATING

SPEC VERSION 1.18.17

EMS INSTALLATION RESPONSIBILITY CHART

DESCRIPTION	PUBLIX	REFRIG. CONTRACTOR	ELECTRICAL CONTRACTOR	COMMENTS
ENERGY MANAGEMENT SYSTEM INSTALLATION RESPONSIBILITY (REFRIGERATION CONTROL EQUIPMENT – RESPONSIBILITY)				
FURNISH ALL TEMPERATURE, HUMIDITY, AND WALK-IN SENSORS	X			
INSTALL WALK-IN SENSORS		X		
WIRE TEMPERATURE & HUMIDITY SENSORS			X	
FURNISH AND INSTALL ALL CONDUIT / WIRING FOR REMOTE SENSORS			X	
FURNISH AND INSTALL ALL CONDUIT / WIRING BETWEEN CONTROLLERS			X	
FURNISH AND INSTALL ALL CONDUIT / WIRING TO REMOTE I/O BOARDS			X	
FURNISH REMOTE I/O BOARDS - EMS BOARD	X			
INSTALL REMOTE I/O BOARDS		X		
FURNISH ALARM PANELS (IF APPLICABLE)	X			
INSTALL / WIRE ALARM PANELS (IF APPLICABLE)			X	
FURNISH ALL LEAK DETECTION SENSORS	X			
INSTALL / WIRE ALL LEAK DETECTION SENSORS			X	
ENERGY MANAGEMENT SYSTEM LIGHTING CONTROL (LIGHTING CONTROL EQUIPMENT – RESPONSIBILITY)				
FURNISH REMOTE I/O BOARDS, 8RO'S & TRANSFORMERS W/ ENCLOSURES	X			
INSTALL / WIRE REMOTE I/O BOARDS, 8RO'S & TRANSFORMERS W/ ENCLOSURES			X	
FURNISH, INSTALL, WIRE, AND TERMINATE LIGHTING CONTACTORS W/ ENCLOSURES			X	
FURNSIH AND INSTALL ALL CONDUIT / WIRING FOR LIGHTING CONTROLS			X	
HVAC CONTROL EQUIPMENT RESPONSIBILITY (HVAC CONTROL EQUIPMENT – RESPONSIBILITY)				
FURNISH EMS A	X			
INSTALL, WIRE, AND TERMINATE EMS A			[illegible]	
FURNISH EMERSON BOARDS, 8I/O, 8RO(C), 16AI	X			
INSTALL EMERSON BOARDS, 8I/O, 8RO(C), 16AI			X	
FURNISH ALL PRE-SPECIFIED SENSORS AND CONTROLS				
INSTALL ALL PRE-SPECIFIED SENSORS AND CONTROLS			X	
FURNISH AND INSTALL ALL CONDUIT / WIRING TO BUILDING CONTROL			X	
FURNISH AND INSTALL ALL CONDUIT / WIRING TO ALL REFRIGERATION [illegible]KS			[illegible]	
FURNISH AND INSTALL ALL CONDUIT / WIRE TO VAV AND DUMP BOX[illegible]			[illegible]	
FURNISH AND INSTALL AL[illegible]DUIT / WIRE TO FURNISHED CONT[illegible]			[illegible]	
FURNISH EMERSON [illegible]ARDS FOR EXISTING HVAC EQUIPMENT RETRO[illegible]	X			
INSTALL EMER[illegible]DS FOR EXISTING HVAC EQUIPMENT RETROFIT			X	

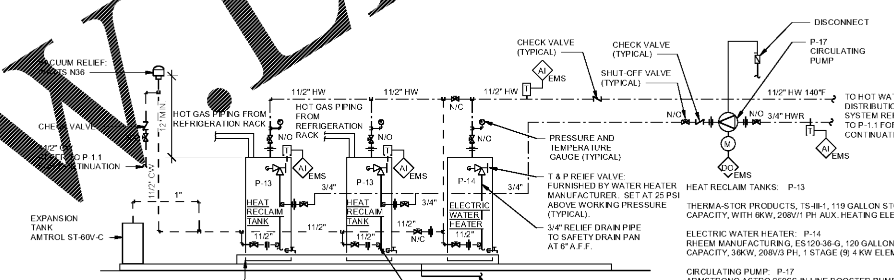

HEAT RECLAIM TANKS: P-13

THERMA-STOR PRODUCTS, TS-III-1, 119 GALLON STORAGE CAPACITY, WITH 6KW, 208V/1 PH AUX. HEATING ELEMENT

ELECTRIC WATER HEATER: P-14
RHEEM MANUFACTURING, ES120-36-G, 120 GALLON STORAGE CAPACITY, 36KW, 208V/3 PH, 1 STAGE (9) 4 KW ELEMENTS

CIRCULATING PUMP: P-17
ARMSTRONG ASTRO 250SS IN LINE BOOSTER PUMP 10 GPM @ 11 FT HEAD, 3/4" INLET AND OUTLET, 1/6 HP.

ALL HAND SINKS AND LAVATORIES SHALL HAVE A THERMOSTATIC MIXING VALVE TO TEMPER HW SUPPLY TO 110^. SEE PLUMBING SPECIFICATION SCHEDULE AND DETAIL #6 AND #7 THIS SHEET

RECLAIM TANKS:
CUT IN 142°F
CUT OUT 148°F
AUXILIARY ELEMENTS SET AT 130°F

WATER HEATERS:
SET AT 140°

CIRCULATING PUMP:
SET AT 140°F
SCHEDULE TO RUN FROM 4:00A.M. TO 12:00A.M. OR TO MATCH STORE OPERATING HOURS.

ALL HAND SINKS AND LAVATORIES SHALL HAVE A THERMOSTATIC MIXING VALVE TO TEMPER HW SUPPLY TO 110^. SEE PLUMBING SPECIFICATION SCHEDULE AND DETAIL #6 AND #7 THIS SHEET

HEAT RECLAIM TANKS AND ELECTRIC WATER HEATER SHALL BE PREPPED WITH ALL ACCESSORIES IN THE MECHANICAL CENTER BY HILL-PHOENIX

NOTES:
AI - ANALOG INPUT
DO - DIGITAL OUTPUT
M - MOTOR
T - TEMPERATURE

1 / R2.1 REFRIG - ELECTRIC WATER HEATER / HEAT RECLAIM PIPING
SCALE: N.T.S.

HEATING HOT WATER COIL OERATIONS AND SPECIFICATIONS

THE HCU'S HEAT RECLAIM COIL SHALL PROVIDE HEAT FOR SPACE HEATING AND SUPPLY AIR (SA) REHEAT DURING DEHUMIDIFICATION OPERATIONS. HEAT REJECTED BY THE REFRIGERATION SYSTEM GENERATE THE HEAT NEEDED TO HEAT THE ZONE OR REHEAT THE DEHUMIDIFIED AIR. THE REFRIGERATION SYSTEM'S HEAT OF REJECTION IS CAPTURED BY A HEAT EXCHANGER AND TRANSPORTED TO THE HOT WATER COIL BY A GLYCOL SECONDARY HYDRONIC SYSTEM.

WHENEVER THE O/A DB DROPS BELOW 61 DEGREES F., AND ZONE'S TEMPERATURE DROPS BELOW 70 DEGREES F., OR WHEN OPERATING IN THE DEHUMIDIFICATION MODE AND THE ZONE'S DB TEMPERATURE IS BELOW 74 DEGREES F., THE EMS SHALL ENABLE THE HEATING HW PUMP TO CIRCULATE HW THROUGH THE HEATING HW LOOP. THE LOOP SHALL REMAIN OPERATIONAL AS LONG AS THERE IS A CALL FOR HEATING FROM ANY RTU OR O/A DB IS 60 DEGREES F. AND BELOW. THE SECONDARY HYDRONIC STSTEM'S PUMP SHALL SECURE WHEN THE CALL FOR HEATING / REHEAT FROM ALL ZONE'S AND/OR THE O/A DB EXCEEDS 60 DEGREES F.

THE RTU'S CONTROLLER SHALL MAINTAIN ZONE'S HEATING SETPOINT (70+-0.5F) OR ZONE'S DEHUMIDIFICATION SETPOINT (74F) BY MODULATING THE HOT WATER COIL 3-WAY VALVE. WHEN THE ZONE'S HEATING REQUIREMENTS ARE MET THE VALVE WILL CLOSE AND THE CONTROLLER SHALL SIGNAL THE EMS.

1. AC-1 - PROVIDE MOTORIZE 2 IN, 3-WAY BALL TYPE CONTROL VALVE AND SPRING RETURN, PROPORTIONAL 24V ACTUATOR WITH NEMA 2 HOUSING AND LISTED INACCORDANCE WITH UL 873. "BELIMO B350 SERIES, 2 IN SS BALL AND STEM WITH BRASS BODY, CHARACTERIZED CONTROL VALVE (Cv= 57); WITH BELIMO AF24 US, 24VDC ACTUATOR" OR APPROVED EQUAL.
2. COMBINATION AUTOMATIC FLOW LIMITING VALVE AND BALL VALVE WITH UNION. THE VALVE'S FLOW CARTRIDGE SHALL ALLOW FOR REMOVAL WITH OUT BREAKING MAIN PIPING AND MAINTAIN FLOW WITHIN 5 PERCENT OF THE TOTAL FLOW. THE BALL VALVE SHALL HAVE A LARGE DIAMETER PLATED BALL WITH A FULL SIZE HANDLE AND A BLOWOUT PROOF STEM WITH A BRASS PACKING NUT. THE UNION SHALL HAVE AN EPDM "O"-RING. B&G MODEL #AC 2" NPT CIRCUIT SENTRY OR APPROVED EQUAL.
3. COMBINATION BALL VALVE AND WYE STRAINER WITH HOSE END DRAIN AND UNION. THE STRAINER SHALL HAVE A 20 MESH STAINLESS STEEL SCREEN AND A FORGE BRASS END DRAIN WITH A 3/4IN HOSE CONNECTION. THE BALL BALVE SHALL HAVE A LARGE DIAMETER PLATED BALL WITH A FULL SIZE STEEL HANDLE AND A BLOWOUT-PROOF STEM WITH A BRASS PACKING NUT. THE UNION SHALL HAVE AN EPDM "O"-RING. B&G MODEL #UBY OR APPROVED EQUAL.
4. BRASS UNION WITH PRESSURE/TEMPERATURE PORT AND AIR VENT PORT. B&G MODEL #UA OR APPROVED EQUAL.
5. CONTINUOUS AUTOMATIC AIR VENT WITH A BRASS BODY AND A 1/4IN NPT CONNECTION. B&G MODEL #97 OR APPROVED EQUAL.
6. ISOLATION BALL VALVE WITH UNION. THE BALL VALVE SHALL HAVE A LARGE DIAMETER PLATED BALL WITH A FULL SIZE HANDLE AND A BLOWOUT PROOF STEM WITH A BRASS PACKING NUT. THE UNION SHALL HAVE AN EPDM "O"-RING.
7. 4 1/2" SS STEM MOUNTED PRESSURE GUAGE, BRASS PRECISION GEAR & PISTON MOVEMENT, PUSH-IN LEXAN WINDOW, 0- 60 PSI RANGE, BRASS SOCKET AND 1/4" MALE NPT THREAD, ACCURACY 1%; 1/4" BRASS BODY PRESSURE TEST PLUG W/ NORDEL PLUG CORE. WEISS 4CTS-060 PRESSURE GUAGE; WEISS BP25-NR TEAT PLUG OR APPROVED EQUAL.
8. WEISS BIMETAL THERMOMETER WITH 3" DIAL, 304 SS CASE AND GLASS WINDOW, ACCURACY 1% OF READING, RANGE 0-250 F, AND EXTENSION NECK THERMOWELL WEISS 3BMS25 DIAL THERMOMETER WITH WEISS B25-75BS THERMOWELL OR APPROVED EQUAL

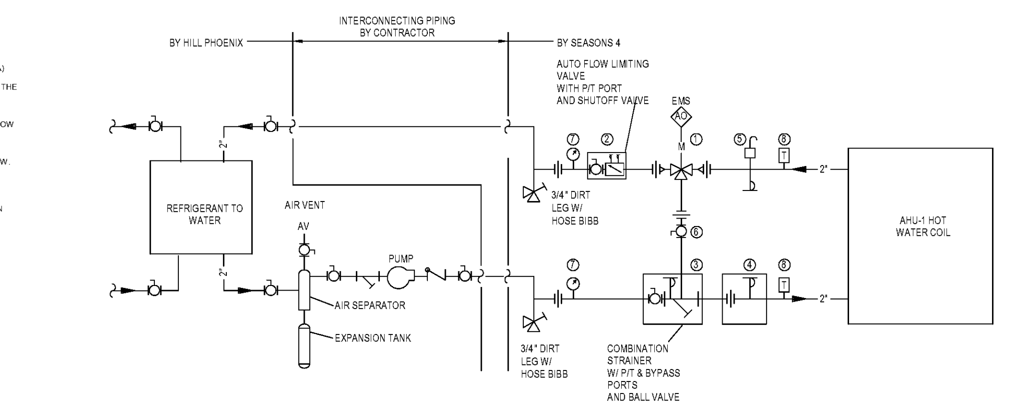

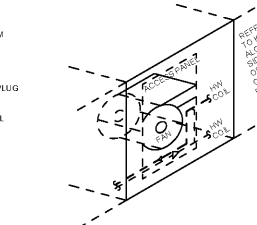

CONTROL LEGEND
- UNION
- UNION W/REDUCER
- THERMOMETER
- GLASS THERMOMETERS
- PRESSURE GUAGE
- BALL VALVE
- FLOW LIMITER
- UNION W/ AUTO AIR VENT TEMPERATURE& PRESSURE PORTS
- THREE WAY MOTORIZED CONTROL VALVE
- EMS ANALOG OUTPUT
- STRAINER W/TEMPERATURE & PRESSURE PORTS
- ROOM TEMPERATURE SENSOR

2 / R2.1 REFRIG - A/C HOT WATER HYDRONIC SYSTEM
SCALE: NTS

Publix SUPER MARKETS

CORPORATE OFFICES, FACILITIES DESIGN
BOX 407, LAKELAND, FL 33802
(863) 680-5295
PHYSICAL ADDRESS:
3300 PUBLIX CORPORATE PARKWAY,
LAKELAND, FL 33811-3311

PUBLIX FACILITIES DESIGN DEPARTMENT
DAVID [illegible]BEE, A[illegible]
ARCHITECT FL [illegible]
DAVID RUBIN
ARCHITECT FL REG. 9255; GA REG. 11[illegible]1; SC REG. 7477; AL REG. 6234; TN REG. 103497; [illegible] REG. 12432; VA REG. 0401017097
JOHN W. KITCHENS, PE
CIVIL/STRUCTURAL FL REG. 45277; GA REG. 020251; SC REG. 16340; AL REG. 20382; TN REG. 101507
PAUL C. HARMAN, PE
STRUCTURAL FL REG. 51959; GA REG. 27740; SC REG. 21754; AL REG. 24905; TN REG. 107882; NC REG. 39673; VA REG. 0402055022
JOHN J. CARAMALIS, PE
MECHANICAL FL REG. 43889; GA REG. 021246; SC REG. 16521; AL REG. 20581; TN REG. 108507; VA REG. 0402055478
ANTHONY CLEMENTI, PE
MECHANICAL FL REG. 54781; GA REG. 31882; SC REG. 25591; AL REG. 28469; TN REG. 111382; NC REG. 039664; VA REG. 0402056137
RAYMOND J. SIRIANNI, PE
ELECTRICAL FL REG. 54085; GA REG. 025636; SC REG. 19743; AL REG. 23065; TN REG. 108038; NC REG. 039963; VA REG. 0402055379

© COPYRIGHT 2018
PUBLIX SUPER MARKETS, INC.

THESE CONSTRUCTION DOCUMENTS ARE THE PROPERTY OF PUBLIX SUPER MARKETS, INC. AND ARE NOT TO BE COPIED OR REUSED FOR ANY SPECIFIC BUILDING WITHOUT WRITTEN PERMISSION. THESE DRAWINGS SHALL NOT BE DUPLICATED WITHOUT PRIOR WRITTEN PERMISSION OF PUBLIX SUPER MARKETS, INC.

THE DESIGN INDICATED IN THESE CONSTRUCTION DOCUMENTS DOES; TO THE BEST OF MY KNOWLEDGE, INFORMATION, AND BELIEF; COMPLY WITH THE APPLICABLE MINIMUM BUILDING CODES

PLOT DATE:
August, 21 2018

No.	Description	Date

STORE NUMBER
1687
Tattersall Park

US 280 & Highway 19
Hoover
Shelby Co., AL

48.10
V0514-2018
SIENNA LITE

REFRIG. SPECS & HEAT RECLAIM PIPING DETAILS

As indicated

R2.1

PERMIT SET DATE 8/29/2018 11:33:20 AM

Order Plans @ WWW.LDILine.com