HEATING HOT WATER COIL OERATIONS AND SPECIFICATIONS

THE HCU'S HEAT RECLAIM COIL SHALL PROVIDE HEAT FOR SPACE HEATING AND SUPPLY AIR (SA) REHEAT DURING DEHUMIDIFICATION OPERATIONS. HEAT REJECTED BY THE REFRIGERATION SYSTEM GENERATE THE HEAT NEEDED TO HEAT THE ZONE OR REHEAT THE DEHUMIDIFIED AIR. THE REFRIGERATION SYSTEM'S HEAT OF REJECTION IS CAPTURED BY A HEAT EXCHANGER AND TRANSPORTED TO THE HOT WATER COIL BY A GLYCOL SECONDARY HYDRONIC SYSTEM.

WHENEVER THE O/A DB DROPS BELOW 61 DEGREES F., AND ZONE'S TEMPERATURE DROPS BELOW 70 DEGREES F., OR WHEN OPERATING IN THE DEHUMIDIFICATION MODE AND THE ZONE'S DB TEMPERATURE IS BELOW 74 DEGREES F., THE EMS SHALL ENABLE THE HEATING HW PUMP TO CIRCULATE HW THROUGH THE HEATING HW LOOP. THE LOOP SHALL REMAIN OPERATIONAL AS LONG AS THERE IS A CALL FOR HEATING FROM ANY RTU OR O/A DB IS 60 DEGREES F. AND BELOW. THE SECONDARY HYDRONIC STSTEM'S PUMP SHALL SECURE WHEN THE CALL FOR HEATING / REHEAT FROM ALL ZONE'S AND/OR THE O/A DB EXCEEDS 60 DEGREES F.

THE RTU'S CONTROLLER SHALL MAINTAIN ZONE'S HEATING SETPOINT (70+-0.5F) OR ZONE'S DEHUMIDIFICATION SETPOINT (74F) BY MODULATING THE HOT WATER COIL 3-WAY VALVE. WHEN THE ZONE'S HEATING REQUIREMENTS ARE MET THE VALVE WILL CLOSE AND THE CONTROLLER SHALL SIGNAL THE EMS.

1. AC-1 - PROVIDE MOTORIZE 2 IN, 3-WAY BALL TYPE CONTROL VALVE AND SPRING RETURN, PROPORTIONAL 24V ACTUATOR WITH NEMA 2 HOUSING AND LISTED INACCORDANCE WITH UL 873. "BELIMO B350 SERIES, 2 IN SS BALL AND STEM WITH BRASS BODY, CHARACTERIZED CONTROL VALVE (Cv= 57); WITH BELIMO AF24 US, 24VDC ACTUATOR" OR APPROVED EQUAL.
2. COMBINATION AUTOMATIC FLOW LIMITING VALVE AND BALL VALVE WITH UNION. THE VALVE'S FLOW CARTRIDGE SHALL ALLOW FOR REMOVAL WITH OUT BREAKING MAIN PIPING AND MAINTAIN FLOW WITHIN 5 PERCENT OF THE TOTAL FLOW. THE BALL VALVE SHALL HAVE A LARGE DIAMETER PLATED BALL WITH A FULL SIZE HANDLE AND A BLOWOUT PROOF STEM WITH A BRASS PACKING NUT. THE UNION SHALL HAVE AN EPDM "O"-RING. B&G MODEL #AC 2" NPT CIRCUIT SENTRY OR APPROVED EQUAL.
3. COMBINATION BALL VALVE AND WYE STRAINER WITH HOSE END DRAIN AND UNION. THE STRAINER SHALL HAVE A 20 MESH STAINLESS STEEL SCREEN AND A FORGE BRASS END DRAIN WITH A 3/4IN HOSE CONNECTION. THE BALL BALVE SHALL HAVE A LARGE DIAMETER PLATED BALL WITH A FULL SIZE STEEL HANDLE AND A BLOWOUT-PROOF STEM WITH A BRASS PACKING NUT. THE UNION SHALL HAVE AN EPDM "O"-RING. B&G MODEL #UBY OR APPROVED EQUAL.
4. BRASS UNION WITH PRESSURE/TEMPERATURE PORT AND AIR VENT PORT. B&G MODEL #UA OR APPROVED EQUAL.
5. CONTINUOUS AUTOMATIC AIR VENT WITH A BRASS BODY AND A 1/4IN NPT CONNECTION. B&G MODEL #97 OR APPROVED EQUAL.
6. ISOLATION BALL VALVE WITH UNION. THE BALL VALVE SHALL HAVE A LARGE DIAMETER PLATED BALL WITH A FULL SIZE HANDLE AND A BLOWOUT PROOF STEM WITH A BRASS PACKING NUT. THE UNION SHALL HAVE AN EPDM "O"-RING.
7. 4 1/2" SS STEM MOUNTED PRESSURE GUAGE, BRASS PRECISION GEAR & PISTON MOVEMENT, PUSH-IN LEXAN WINDOW, 0-60 PSI RANGE, BRASS SOCKET AND 1/4" MALE NPT THREAD, ACCURACY 1%; 1/4" BRASS BODY PRESSURE TEST PLUG W/ NORDEL PLUG CORE. WEISS 4CTS-060 PRESSURE GUAGE; WEISS BP25-NR TEAT PLUG OR APPROVED EQUAL.
8. WEISS BIMETAL THERMOMETER WITH 3" DIAL, 304 SS CASE AND GLASS WINDOW, ACCURACY 1% OF READING, RANGE 0-250 F, AND EXTENSION NECK THERMOWELL WEISS 3BMS25 DIAL THERMOMETER WITH WEISS B25-75BS THERMOWELL OR APPROVED EQUAL

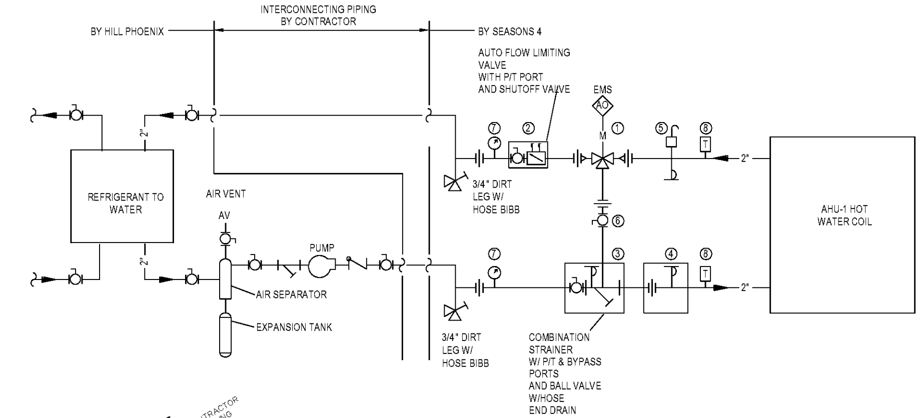

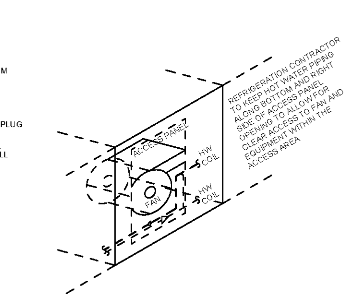

1 HVAC - A/C HOT WATER HYDRONIC SYSTEM
M6.1 SCALE: NTS

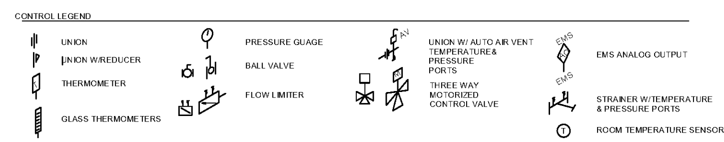

MELINK SYSTEM
SEQUENCE OF OPERATIONS

DESCRIPTION & SETUP:

THIS SYSTEM WILL CONTROL THE EXHAUST AND SUPPLY AIR REQUIREMENTS FOR HOODS GH-1 AND GH-2. OPTICAL AND HEAT SENSORS IN THE HOODS AND EXHAUST DUCTS TRANSMIT COOKING ACTIVITY INTENSITY TO THE SYSTEM I/O PROCESSOR MOUNTED IN THE UTILITY CABINET ON THE RIGHT SIDE OF GH-1. VARIABLE FREQUENCY DRIVES (VFD'S) HOUSED IN THE HOOD'S UTILITY CABINET WILL MODULATE F-1, F-2, MAU-1, AND MAU-2. A SEPERATE 1HP 208V VFD CONTROLLER WILL CONTROL EACH F-1, F-2, MAU-1, AND MAU-2. THE AVERAGE EXHAUST RATE SIGNAL SHALL BE USED TO CONTROL MAU-1 AND MAU-2, AND ALSO MODULATE AC-1'S OA DAMPER.

THE MELINK I/O PROCESSOR SHALL RECEIVE START AND STOP SIGNALS TO ACTIVATE THE SYSTEM'S GREASE HOODS. THE SIGNALS SHALL BE CONSISTENT TO THE STORE'S OPERATING HOURS. THE SYSTEM'S KEYPAD, MOUNTED ON THE LEFT SIDE OF GH-1 OR ON THE WALL WITHIN 10 FT OF THE HOOD, WILL MONITOR AND DISPLAY THE EXHAUST HOOD'S PERFORMANCE. THE CONTROLLER SHALL HAVE A SWITCH TO OPERATE THE TIMED BYPASS FOR OFF HOURS OPERATIONS AND SYSTEM MAINTENANCE. THE HOOD'S BYPASS TIME PERIOD SHALL BE SET FOR 1 HOUR (ADJUSTABLE).

START-UP:

UPON ACTIVATION THE MELINK'S I/O PROCESSOR SHALL:

1) ACTIVATE THE GREASE HOOD LIGHTING SYSTEM,
2) INITIATE MONITORING OF THE OPTICAL AND HEAT SENSORS

OPERATION:

THE MELINK CONTROLLER WILL RECEIVE 0-10 V SIGNALS FROM THE OPTICAL AND HEAT SENSORS IN THE HOOD AND EXHAUST DUCT FROM EACH HOOD. AS THE COOKING LOAD INCREASES OR DECREASES THE CONTROLLER SHALL:

1) ADJUST THE GREASE FAN'S VFD'S AS NECESSARY TO MATCH THE FAN'S OUTPUTS TO THE COOKING LOAD. THE EXHAUST CFMS SHALL VARY FROM THE MAXIMUM TO THE MINIMUM SCHEDULED VALUES. SEE THE FAN SCHEDULE ON SHEET M-3.1.

2) THE MAKE-UP AIR FANS INITIATES OPERATION AT THEIR MAXIMUM CFM AND THEN ADJUST AS NECESSARY
TO MEET THE REQUIREMENTS OF THEIR RESPECTIVE GREASE HOOD. SEE THE FAN SCHEDULE ON SHEET M-3.1 FOR THE MAXIMUM AND MINIMUM OUT SIDE AIR QUANTITIES

THE MELINK CONTROLLER SHALL CONTINUOUSLY MONITOR THE GREASE HOODS UNTIL THE END OF THE PROGRAMMED OPERATING PERIOD. AT THE END OF THIS TIME PERIOD THE CONTROLLER SHALL SECURE THE EXHAUST AND MAKE UP AIR FANS AND SEND A SIGNAL TO AC-1 TO CLOSE THE OA DAMPER.

BYPASS CONTROLS:

IN CASE OF AN EMERGENCY A 100% SWITCH ON THE KEYPAD WILL BYPASS THE SENSORS AND OPERATE THE FANS AT FULL SPEED TO 10 MINUTES (PROGRAMMABLE).

THE KEYPAD'S FAN SWITCH SHALL OPERATE AS A TIMED BYPASS FOR ACTIVATING GH-1 AND GH-2 DURING OFF HOUR OPERATIONS. WHEN ACTIVATED THE HOODS SHALL OPERATE NORMALLY EXCEPT POWER WILL BE SECURED AFTER A 1 HOUR PERIOD (PROGRAMMABLE).

THE I/O PROCESSOR SHALL MONITOR THE GRESE HOOD'S FIRE DETECTION SYSTEM. IN EVENT OF A GREASE HOOD FIRE THE MELINK'S I/O PROCESSOR SHALL SECURE THE SUPPLY AIR FAN, SF-1 AND
RE-ADJUST THE GREASE HOOD EXHAUST FANS VFDs TO RUN AT 100% SPEED.

FOR MELINK SYSTEM OPERATION DURING A GREASE HOOD FIRE SEE THE ANSUL SYSTEM SEQUENCE OF OPERATION ON SHT. M-4.2.

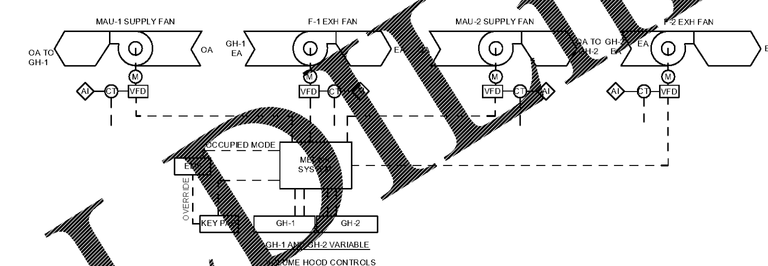

2 HVAC - GH-1, GH-2 CONTROLS
M6.1 SCALE: NTS

AC-1 SEQUENCE OF OPERATIONS

AC-1 IS A SEASONS-4 DUAL PATH ROOFTOP DX AIR CONDITIONING SYSTEM DESIGNED TO MONITOR, CONDITION AND DISTRIBUTE AIR TO THE PUBLIX SUPERMARKET SALES AREA. THE UNIT HAS TWO AIR CONDITIONING CIRCUITS, AN OUTSIDE AIR (OA) CIRCUIT, WHICH AIR CONDITIONS OUTSIDE VENTILATION AIR, AND RETURN AIR (RA) CIRCUIT, WHICH AIR CONDITONS ZONE RECIRCULATED RA. THE SYSTEM SHALL HAVE TWO MODES OF OPERATION; OCCUPIED AND UPOCCUPIED MODES. DURING THE OCCUPIED MODE THE OA DAMPER WILL OPEN AND THE UNIT'S INTERNAL RA BYPASS SHALL CLOSE, DIRECTING ALL OF THE OA THROUGH THE OA CIRCUIT. SIMULTANEOULSY, THE SUPPLY AIR (SA) FAN WILL RAMP UP TO THE MAXIMUM CFM (AS SCHEDULED). IN THE UNOCCUPIED MODE THE OA DAMPER WILL CLOSE AND THE DAMPER CONTROL SHALL OPEN THE UNIT'S INTEGRAL RA BYPASS DAMPER, DIRECTING A PROTION OF THE RA THROUGH THE OA CIRCUIT. THE SUPPLY AIR FAN SHALL MODULATE CLOSED.

UNIT DISCRIPTION

COOLING IS ACCOMPLISHED USING FIVE (5) DIRECT EXCHANGE (Dx) R-410A COMPRESSORS AND THREE (3) SEPARATE COOLING COILS. THE OUTSIDE AIR CIRCUIT INCORPORATES TWO (2) OF THE THREE COOLING COILS AND THREE (3) COMPRESSORS (TANDEM SET OF 8.5 OR 7.5 HP COMPRESSORS AND ONE (1) 13 OR 10 HP COMPRESSOR). WHILE THE RA CIRCUIT ESES ONE (1) COOLING COIL AND A TANDEM SET OF 5.5 OR 5.0 HP COMPRESSORS.

THE FIRST COOLING COIL, (THE DEHUMIDIFICATION COIL) IN THE OA CIRCUIT IS PAIRED WITH A TANDEM COMPRESSOR SET OF 8.5 OR 7.5 HP COMPRESSORS (LABLED COMP #1A & COMP #1B). THE FIRST COMPRESSOR (COMP #1A) OF THE TANDEM SET IS A DIGITAL SCROLL COMPRESSOR, WHICH ACTIVATES FIRST TO VARY REFRIGERANT FLOW IN ORDER TO MAINTAIN A CONSTANT OA COIL LEAVING AIR TEMPERATURE (LAT). COMP #1A AND ITS ASSOCIATED COOLING COIL CIRCUIT IS LABLED COOL 1A. THE SECOND TANDUM COMPRESSOR (COMP #1B) IS A CONSTANT SPEED COMPRESSOR WHICH MAXIMIZES THE COIL'S CAPACITY. COMP #1A AND ITS ASSOCIATED COOOLING COIK COMBINATION IS LABLED COOL 1B.

THE SECOND COIL (COOL 2, PRECOOLING COIL) EMPLOYS A 13 OR 10 HP COMPRESSOR (COMP #2) TO PRECOOL THE AIR DURING PEAK LOADS.

THE OA CIRCUIT DEHUMIDIFICATION COIL, CONSISTING OF COOL#1A & COOL#1B CIRCUITS, SHALL BE CONTROLLED TO MEET A VARIABLE LAT SETPOINT BASED ON THE ZONE'S DEWPOINT (DP). THE CONTROLLER SHALL ADJUST THE LAT_{SET} TO RANGE BETWEEN 43°F TO 55°F. IF THE DP_{ZONE} IS ABOVE THE DP_{SET} WITH DP_{OA} BELOW THE ZONE'S DP_{SET} THE COIL #1A LAT WILL ADJUST THE SETPOINT TOWARDS 43°F. HOWEVER, SHOULD THE DP_{OA} RISE ABOVE THE ZONE'S DP_{SET} WITH THE DP_{ZONE} BELOW ZONES' DP_{SET} THE LAT_{SET} OF COIL #1A SHALL ADJUST TOWARDS 55°F.

COMPRESSOR #1A (A DIGITAL SCROLL COMPRESSOR) SHALL VARY THE FLOW OF THE REGRIGERANT BASED ON AN ERROR SIGNAL EQUAL TO THE DIFFERENCE BETWEEN THE OA CIRCUIT'S LAT AND THE OA CIRCUIT'S LAT_{SET}. THE ERROR SIGNAL, WHICH VARIES FROM 5.0VDC (MAXIMUM CAPACITY) TO 2.2VDC (30% CAPACITY), IS GENERATED BY THE CPC 168AO CONTROLLER ALGORITHM TO ADJUST COMP #1A CAPACITY. IF COMP#1B IS OFF THE CONTROLLER SHALL LIMIT COMP #1A MINIMUM CAPACITY TO 67% (3.7VDC). WITH BOTH COMP 1A AND #1B ENABLED THE CONTROLLER SHALL ADJUST THE MINIMUM CAPACITY LOWER TO 30% (2.2VDC). THE ABSOLUTE MINIMUM CAPACITY SHALL BE SET HIGHER THAN THE COMPRESSOR'S ABLSOLUTE MINIMUM CAPACITY OF 10% (1.44VDC) FOR THE PROTECTION OF THE SYSTEM.

THE THIRD COIL (COOL #3, RA COIL) IS SUPPLIED REFRIGERANT THROUGH A TANDEM SET OF 5.5 OR 5.0 HP COMPRESSORS (COMP #3A, COMP #3B) TO AIR-CONDITION ZONE RA WHEN THE OA CIRCUIT COOLING CAPACITY IS NOT CAPABLE OF MEETING THE ZONE'S TOTAL COOLING LOAD.

AC-1 USES A HOT WATER (HW) HEATING COIL TO PROVIDE REHEAT DURING DEHUMIDIFICATION MODE AND/OR MAINTAIN SPACE HEATING SET POINT DURING THE HEATING MODE. HOT WATER IS SUPPLIED TO THE COIL VIA THE REFRIGERATION SYSTEM'S HEAT RECLAIM HEAT EXCHANGER. SUPPLEMENTARY HEATING IS PROVIDED BY AN ELECTRIC HEATING COIL FOR FLORIDA STORES OR A MODULATING GAS HEATER FOR NON-FLORIDA STORES.

THE SA IS PROVIDED BY AN AIRFOIL, SINGLE WIDTH SINGLE INLET 20 HP PLENUM FAN WITH A VARIBLE FREQUENCY DRIVE CONTROLLER. THE UNIT SHALL BE CONTROLLED BY A CPC MULTIFLEX 168AO BOARD. THE START/STOP SIGNAL IS PROVIDED BY THE BORAD'S DIGITAL OUTPUT #1.

OCCUPIED MODE

THE OCCUPIED MODE SHALL CORRESPOND TO THE OPERATING HOURS OF THE STORE. AT THE START OF THE OCCUPIED PERIOD THE CONTROLLER SHALL TAKE THE FOLLOWING ACTIONS:
1. OA DAMPER SHALL OPEN
2. A FAN'S VFD SHALL RAMP UP TO MAXIMUM CFM (AS SCHEDULED)
3. THE UNIT'S RA BYPASS DAMPER SHALL CLOSE

THE OCCUPIED MODE HAS FOUR (4) SUB-MODES OF OPERATION
1. COOLING
2. DEHUMIDIFICATION
3. REHEAT
4. HEATING

COOLING SUB-MODE

SALES AREA SETPOINTS: DB_{SET} - 74°F, DP_{SET} - 55°F. OA SETPOINTS: DP_{SET} - 53°F. SEE AC SCH, M-3, FOR THE MAXIMUM AND MINIMUM CFM QUANTITIES. IF THERE IS A CALL FOR COOLING (DB_{ZONE} > DB_{SET}) THE CONTROLLER SHALL FIRST ENABLE OA CIRCUIT FOLLOWED BY THE RA CIRCUIT TO MAINTAIN THE ZONE DB_{SET}. THE CONTROLLER SHALL BE PROGRAMMED TO MEET A VARIABLE COOLING COIL # 1A LAT SETPOINT BASED ON THE ZONE'S DEW POINT.

OA CIRCUIT
COOL #1A (DEHUMIDIFICATION COIL) ACTIVATION SEQUENCE:
COOL #1 DIGITAL SCROLL (COMP #1A) COMPRESSOR SHALL ACTIVATE WHEN
1. THE DB_{ZONE} RISES ABOVE DB_{SET}
COMP #1A SHALL CYCLE OFF WHEN
1. THE DB_{ZONE} FALLS BELOW ZONE'S DB_{SET}
2. IF ANY FURNACE IS ENERGIZE ON

COOL #1B SECOND TANDUM COMPRESSOR (COMP#1B) SHALL ACTIVATE WHEN:
1. COOLING COIL #1A (DEHUMIDIFICATION COIL) LAT IS ABOVE THE COIL'S LAT_{SET} PLUS 1.0°F
2. COMP #1A IS ENABLED AND OPERATING AT MAXIMUM CAPACITY (5.0 VDC), FOR A DURATION OF 3 MINUTES

COMP #1B SHALL ENERGIZE OFF WHEN:
1. COOL 1A LAT DROPS BELOW LAT_{SET} -2°F
2. COMP #1A IS AT MINIMUM CAPACITY (2.2 VDC), FOR A DURATION OF 3 MINUTES
3. OA CIRCUIT COOL #2 (PRECOOLING COIL) COMPRESSOR (COMP #2) IS DISABLED FOR 3 MINUTES
4. COMP #1A ENERGIZES OFF
5. ANY FURNACE IS ENERGIZED ON

COOL #2 (PRE-COOLING COIL) ACTIVATION SEQUENCE:
COOL #2 COMPRESSOR (COMP #2) SHALL ACTIVATE WHEN:
1. COMP #1A IS ENERGIZED AND IS AT MAXIMUM CAPACITY (5.0 VDC), FOR A DURATION OF 3 MINUTES
2. COMP #1B IS ENERGIZED FOR (3) MINUTES
3. COOLING COIL #1 LAT REMAINS ABOVE LAT_{SET} +2°F

COOL #2, COMP #2 ENERGIZES OFF WHEN:
1. COOLING COIL #1A LAT DROPS BELOW LAT_{SET} -2°F
2. COMP#1 IS AT MINIMUM CAPACITY (2.2 VDC)
3. COMP #1A IS ENERGIZED OFF
4. ANY FURNACE IS ENERGIZED ON

RA CIRCUIT
COOL #3, RA COOLING COIL ACTIVATION SEQUENCE
COOL #3 COMPRESSOR (COMP #3A & #3B) SHALL ACTIVATE WHEN:
1. DB_{ZONE} RISES AND REMAINS ABOVE ZONE'S DB_{SET} AFTER BEEN "TRUE" FOR 9 MINUTES THE CONTROLLER SHALL ACTIVATE COMP #3A. SHOULD COMP #3A HEAD PRESSURE RISES ABOVE A PRESET LIMIT COMP #3B ENERGIZES ON

COOL #3, COMP #3A & 3B SHALL ENERGIZE OFF WHEN:
1. AS THE HEAD PRESSURE DECREASES BELOW THE PRESET LIMIT COMP #3B SHALL ENERGIZE OFF
2. DB_{ZONE} FALLS BELOW ZONE'S DB_{SET} AFTER BEEN TRUE FOR 9 MINUTES
3. ANY FURNACE IS ENERGIZED ON

SHOULD ANY COMPRESSOR CYCLE OFF THE ANTI-SHORT CYCLE TIME DELAY PREVENTS REACTIVATION OF THE COMPRESSOR UNTIL A FIVE (5) MINUTE TIME DELAY EXPIRES BEGINNING AT THE TIME OF DEACTIVATION.

DEHUMIDIFICATION SUB MODE

IF THERE IS A CALL FOR DEHUMIDIFICATION (DP_{ZONE} > ZONE'S DP_{SET} OR DP_{OA} > OA DP_{SET}) THE CONTROLLER SHALL FIRST ENABLE OA CIRCUIT FOLLOWED BY THE RA CIRCUIT TO MAINTAIN THE ZONE DB_{SET}. THE OA CIRCUIT SHALL BE PROGRAMMED TO MEET A VARIABLE COOLING COIL #1A LAT_{SET} BASED ON ZONE'S DEW POINT (DP). THE CONTROLLER SHALL ADJUST THE LAT_{SET} TO RANGE BETWEEN 45°F AND 55°F.

SALES AREA SETPOINTS:
- DB_{SET} -74°F
- DP_{SET} -55°F

OA SETPOINTS:
- DP_{SET} -53°F.

REHEAT:
- $RHDB_{SET}$ 71°F

OA CIRCUIT
COOL #1A (DEHUMIDIFICATION COIL) ACTIVATION SEQUENCE:
COOL #1A DIGITAL SCROLL (COMP #1A) SHALL ACTIVATE WHEN:
1. THE DP_{ZONE} RISES ABOVE ZONE'S DP_{SET}
2. THE DP_{OA} RISES ABOVE OA DP_{SET}

COOL #1A SHALL CYCLE OFF WHEN:
1. THE DP_{ZONE} FALLS BELOW ZON'ES DP_{SET}
2. THE DP_{OA} FALLS BELOW OA DP_{SET}
3. ANY FURNACE IS ENERGIZED ON

COOL #1B, SECOND COMPRESSOR (COMP #1B) SHALL ACTIVATE WHEN:
1. COOLING COIL #1A (DEHUMIDIFICATION COIL) LAT IS ABOVE COIL'S LAT_{SET} +1.0°F
2. COMP #1AIS ENABLED AND OPERATING AT MAXIMUM CAPACITY (5.0 VDC) FOR THREE (3) MINUTES

COMP #1B SHALL ENERGIZE OFF WHEN:
1. COOLING COIL #1A LAT DROPS BELOW LAT_{SET} -2.0°F
2. COMP #1A IS AT MINIMUM CAPACITY (2.2 VDC) FOR A PERIOD OF 3 MINUTES
3. OA CIRCUIT COOL #2 (PRECOOLING COIL) COMPRESSOR (COMP #2) IS DISABLED FOR THREE (3) MINUTES
4. COMP #1A IS ENERGIZED OFF
5. ANY FURNACE IS ENERGIZED ON

COOL #2 (PRE-COOLING COIL) ACTIVATION SEQUENCE:
COOL #2, COMPRESSOR (COMP #2) SHALL ACTIVATE WHEN:
1. COMP #1A IS ENERGIZED AND IS AT MAXIMUM CAPACITY (5.0 VDC) FOR A DURATION OF 3 MINUTES
2. COMP #1B IS ENERGIZED FOR THREE (3) MINUTES
3. COOLING COIL #1 lat REMAINS ABOVE LAT_{SET} +2°F

COMP #2 SHALL ENERGIZE OFF WHEN:
1. COOLING COIL #1 LAT DROPS BELOW LAT_{SET} -2°F
2. COMP #1A IS AT MINIMUM CAPACITY (2.2 V) FOR A DURATION OF 3 MINUTES
3. COMP #1A ENERGIZES OFF
4. ANY FURNACE IS ENERGIZED ON

RA CIRCUIT
COOL #3 (RA COOLING COIL) ACTIVATION SEQUENCE:
COOL #3 COMPRESSOR (COMP #3A & 3B) SHALL ACTIVATE WHEN:
1. DP_{ZONE} RISES AND REMAINS ABOVE ZONE'S DP_{SET} AFTER BEEN "TRUE" FOR 9 MINUTES THE CONTROLLER SHALL ACTIVATE COMP #3A. SHOULD COMP #3A HEAD PRESSURE RISE ABOVE A PRESET LIMIT COMP #3B ENERGIZES ON

COOL #3 COMPRESSORS (COMP #3A & 3B) SHALL ENERGIZE OFF WHEN:
1. AS THE HEAD PRESSURE DECREASES BELOW THE PRESET LIMIT COMP #3B SHALL ENERGIZE OFF
2. DP_{ZONE} FALLS BELOW ZONE'S DP_{SET} AFTER BEEN TRUE FOR 9 MINUTES
3. ANY FURNACE IS ENERGIZED ON

IF DURING THE DEHUMIDIFICATION MODE THE DB_{ZONE} FALLS BELOW THE ZONE'S DB_{SET} THE REHEAT MODE SHALL ACTIVATE.

SHOULD ANY COMPRESSOR CYCLE OFF THE ANTI-SHORT CYCLE TIME DELAY PREVENTS REACTIVATION OF THE COMPRESSOR UNTIL A FIVE (5) MINUTE TIME DELAY EXPIRES BEGINNING AT THE TIME OF DEACTIVATION

REHEAT SUB-MODE

THE HW CONTROL VALVE SHALL MODULATE OPEN WHEN:
1. THE DB_{ZONE} FALLS BELOW $RHDB_{SET}$

THE HW CONTROL VALVE MODULATES CLOSED WHEN:
1. THE DB_{ZONE} RISES ABOVE $RHDB_{SET}$

HEATING SUB-MODE

SALES AREA HEATING SETPOINTS: DB_{SET} - 70°F. THE GAS HEATER'S CONTROLLER SHALL MODULATE TO MAINTAIN DB_{SA} = ... ELECTRIC HEATER SHALL STAGE THE ELECTRICAL COIL'S STAGES TO MAINTAIN THE DB_{SET}.

IF THERE IS A CALL FOR HEATING, DB_{ZONE} FALLS BELOW ZONE'S DB_{SET}, THE CONTROLLER SHALL:
1. ENABLE THE REHEAT SUB-MODE
2. IF THE REHEAT MODE IS ENABLED FOR THREE MINUTES (ADJUSTABLE) AND DB_{ZONE} < ZONE'S DB_{SET} THE AUXILIARY HEATER SHALL CYCLE ON

WHEN DB_{ZONE} RISES TO ZONE'S DB_{SET} THE CONTROLLER SHALL:
1. THE AUXILLARY HEATER IS CYCLE OFF
2. IF DB_{ZONE} RISES ABOVE THE ZONE'S DB_{ZONE} +1°F, THE REHEAT MODE SHALL CYCLE OFF

UNOCCUPIED MODE

THE UNOCCUPIED MODE SHALL CORRESPOND TO THE STORE'S CLOSING PERIOD. AT THE START OF THE UNOCCUPIED PERIOD THE CONTROLLER SHALL TAKE THE FOLLOWING ACTIONS:
1. OA DAMPER SHALL CLOSE
2. A FAN'S VFD SHALL RAMP TO MINIMUM CFM (16,000 CFM)
3. RA BYPASS DAMPER SHALL OPEN

THE NIGHT SET BACK DAMPER CONTROL SHALL OPEN THE RA BYPASS DAMPER TO REDIRECT A PORTION OF THE RA STREAM TO THE OA CIRCUIT. THE CONDITIONED RA SHALL MIX WITH UNTREATED RA BEFORE IT IS SUPPLIED TO THE ZONE.

THE UNOCCUPIED MODE HAS FOUR (4) SUB-MODES OF OPERATION:
1. COOLING
2. DEHUMIDIFICATION
3. REHEAT
4. HEATING

THE UNOCCUPIED SUB-MODES ARE SEQUENCED IN THE SAME MANNER AS THE OCCUPIED MODE. SEE THE OCCUPIED MODE FOR SEQUENCING.

OVERRIDE MODE

IF DURING THE UPOCCUPIED MODE THE MELINK SIGNALS THE CPC CONTROL BOARD TO OPERATE IN THE OCCUPIED MODE AC-1 SHALL REVERT TO THE OCCUPIED MODE FOR A SPECIFIED TIME PERIOD (ADJUSTABLE).

ALARMS

SMOKE DUCT DETECTORS SHALL MONITOR SA AND RA AIR FLOWS FOR FIRE INDUCED SMOKE. IN EVENT OF A SMOKE EVENT ANY SMOKE DUCT DETECTOR SHALL INITIATE A SIGNAL WHICH ALERTS THE FIRE ALARM SYSTEM. SIMULTANEOUSLY, THE SMOKE DUCT DETECTOR SHALL SECURE THE 24V CONTROL POWER TO THE REVERSE ACTING FIRE POWER RELAY IN THE UNIT CAUSING THE RELAY TO OPEN AND DISABLE THE SA FAN WHICH IN TURN SECURES POWER TO THE ROOFTOP UNIT. THE RELAY SHALL REMAIN IN THE OPEN POSITION UNTIL THE FIRE ALARM SYSTEM IS MANUALLY RESET. WHEN RESET, THE SMOKE DUCT DETECTOR WILL RESTORE 24V CONTROL POWER TO THE FIRE POWER RELAY WHICH IN TURN ENABLES THE SA FAN CIRCUIT.

ANALOG OUTPUTS

1. COMP #1 (DIGITAL SCROLL COMPRESSOR) — ANALOG OUTPUT 1
2. GAS HEATER GAS CONTROL VALVE / ELECTRICAL COIL — ANALOG OUTPUT 2
3. SA FAN VFD — ANALOG OUTPUT 3
4. HOT WATER/REHEAT VALVE — ANALOG OUTPUT 4
5. OA DAMPER ACTUATOR — ANALOG OUTPUT 5

ANALOG INPUTS

1. ZONE DB TEMPERATURE SENSOR — ANALOG INPUT 1
2. ZONE DP TEMPERATURE SENSOR — ANALOG INPUT 2
3. SA DB TEMPERATURE SENSOR — ANALOG INPUT 3
4. RA DB TEMPERATURE SENSOR — ANALOG INPUT 4
5. COOL #1 DB LAT SENSOR — ANALOG INPUT 5
6. COOL #2 DB LAT SENSOR — ANALOG INPUT 6
7. COOL #3 DB LAT SENSOR — ANALOG INPUT 7
8. HW HEATING COIL DB LAT SENSOR — ANALOG INPUT 8
9. OA DB TEMPERATURE SENSOR — ANALOG INPUT 9
10. FAN STATUS INPUT — ANALOG INPUT 10
11. MELINK OA DAMPER ACTUATOR — ANALOG INPUT 11
12. OA DAMPER FEEDBACK — ANALOG INPUT 12
13. POTENTIMETER MIN POSITION FOR OA DAMPER 0-5VDC — ANALOG INPUT 13
14. POTENTIMETER MAX POSITION FOR OA DAMPER 0-5VDC — ANALOG INPUT 14

DIGITAL OUTPUTS

1. SUPPLY FAN (PROOF OF AIRFLOW) — DIGITAL OUTPUT 1
2. CLOGGED FILTER STATUS — DIGITAL OUTPUT 2
3. BLOWER OVERLOAD STATUS — DIGITAL OUTPUT 3
4. DRAIN PAN FLOAT SWITCHES — DIGITAL OUTPUT 4
5. COMPRESSORS HIGH DISCHARGE PRESSURE STATUS — DIGITAL OUTPUT 5
6. VFD MANUAL BYPASS STATUS — DIGITAL OUTPUT 6
7. COMPRESSOR #1A PROOF STATUS — DIGITAL OUTPUT 7
8. COMPRESSOR #1B PROOF STATUS — DIGITAL OUTPUT 8
9. COMPRESSOR #2 PROOF STATUS — DIGITAL OUTPUT 9
10. COMPRESSOR #3A PROOF STATUS — DIGITAL OUTPUT 10
11. COMPRESSOR #3B PROOF STATUS — DIGITAL OUTPUT 11

ALARMS

1. LOSS OF AIRFLOW — DIGITAL INPUT #1
2. HIGH HEAD PRESSURE — DIGITAL INPUT #5
3. HOT WATER COIL FREEZESTAT — DIGITAL INPUT #8

NOTICES

1. CLOGGED FILTER, EITHER RA OR OA — DIGITAL INPUT #2
2. MAIN BLOWER MOTOR OVERLOAD — DIGITAL INPUT #3
3. ... DRAIN PAN — DIGITAL INPUT #4
4. ... PROOFS — DIGITAL INPUT #7, #8, #9, #10, #11, #12

SAFETIES

FREEZESTATS
OA COOLING CIRCUIT
- SYSTEM 1 LAT_{ZONE} DROPS BELOW 36°F
  1. COMP #1 OF COM #1A CYCLES OFF AND INITIATES PUMPDOWN
- SYSTEM 1 COMPRESSOR RESTART AFTER FREEZESTAT SHUTDOWN:
  1. IF OA COOLING CIRCUIT SYSTEM 1 LAT_{ZONE} RISES ABOVE 46°F
  2. COMPRESSOR RESTART TIME DELAY OF 5 MINUTES

RA COOLING CIRCUIT
- SYSTEM 3 LAT_{ZONE} DROPS BELOW 36°F
  1. COMP #3 CYCLES OFF AND INITIATES PUMPDOWN

SYSTEM 1 COMPRESSOR RESTART AFTER FREEZESTAT SHUTDOWN
1. IF OA COOLING CIRCUIT SYSTEM 3 LAT_{ZONE} RISES ABOVE 46°F
2. COMPRESSOR RESTART TIME DELAY OF 5 MINUTES

HARDWIRED SAFETIES

- PHASE MONITORING - MANUAL RESET
- COMPRESSOR HIGH PRESSURE SWITCHES (ALARM TO CPC) - MANUAL RESET
- COMPRESSOR LOW PRESSURE SWITCHES - AUTO RESET
- COPELAND MOTOR PROTECTION - AUTO RESET
- FURNACE MODULE HIGH LIMIT, FLAME FAIL / FAULT, ROLL OUT - AUTO RESET
- BLOWER MOTOR OVERLOAD (ALARM TO CPC) - MANUAL RESET
- SA AND RA SMOKE DUCT DETECTORS - MANUAL RESET
- ANTI-SHORT CYCLE TIME DELAYS FOR COMPRESSOR (5 MINUTES) - AUTO RESET

HOFFMAN CONTROLS

CONDENSER FAN CONTROL SEQUENCE
- CONDENSER FAN #1 SHALL ACTIVATE IF REFRIGERANT LIQUID TEMPERATURE OF COMP #1A / #1B OR COMP #2 OR COMP #3A / #3B IS GREATER THAN 60°F
- CONDENSER FAN #2 SHALL ACTIVATE IF REFRIGERANT LIQUID TEMPERATURE OF COMP #1A / #1B OR COMP #2 OR COMP #3A / #3B IS GREATER THAN 71°F
- CONDENSER FAN #3 SHALL ACTIVATE IF REFRIGERANT LIQUID TEMPERATURE OF COMP #1A / #1B OR COMP #2 OR COMP #3A / #3B IS GREATER THAN 82°F
- CONDENSER FAN #4 SHALL ACTIVATE IF REFRIGERANT LIQUID TEMPERATURE OF COMP #1A / #1B OR COMP #2 OR COMP #3A / #3B IS GREATER THAN 86°F
- CONDENSER FAN #5 SHALL ACTIVATE IF REFRIGERANT LIQUID TEMPERATURE OF COMP #1A / #1B OR COMP #2 OR COMP #3A / #3B IS GREATER THAN 90°F
- CONDENSER FAN #6 SHALL ACTIVATE IF REFRIGERANT LIQUID TEMPERATURE OF COMP #1A / #1B OR COMP #2 OR COMP #3A / #3B IS GREATER THAN 94°F

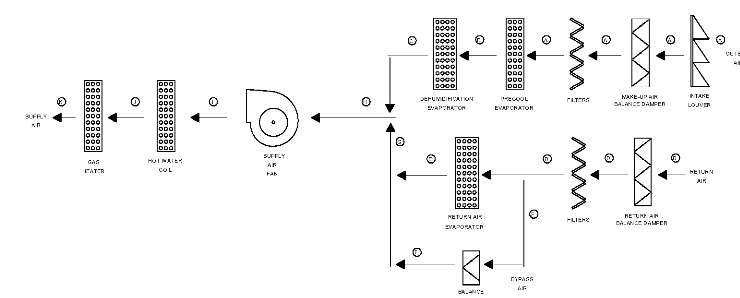

	A	B	C	D	E	F	G	H	I	J	K
CFM	5,000	5,000	5,000	15,000	9,000	6,000	15,000	20,000	20,000	20,000	20,000
DB(°F)	93.0	70.3	46.1	72.6	48.8	72.8	58.0	55.0	57.4	57.4	57.4
WB(°F)	77.0	65.5	45.9	60.2	48.1	60.2	53.1	51.4	52.4	52.4	52.4

3 HVAC - AC-1 AIR FLOW DIAGRAM
M6.1 NTS

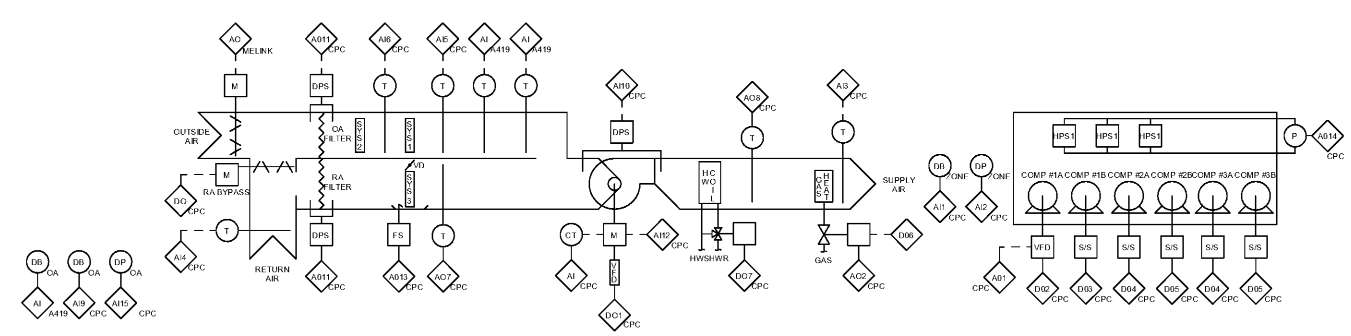

NOTES:

AO - ANALOG OUTPUT	FS - FLOAT SWITCH	SET - SETPOINT	HP - HORSEPOWER	HWR - HOT WATER RETURN	DPS - DIFFERENTIAL PRESSURE SWITCH
DO - DIGITAL OUTPUT	DX - DIRECT EXCHANGE	EA - EXCHANGE AIR	LAT - LEAVING AIR TEMPERATURE	DB - DRY BULB	HWS - HOT WATER SUPPLY
AI - ANALOG INPUT	SA - SUPPLY AIR	OA - OUTSIDE AIR	DB - DRY BULB TEMPERATURE	DP - DEW POINT	
VD - VOLUME DAMPER	RA - RETURN AIR	CFM - CUBIC FEET / MIN	DP - DEW POINT TEMPERATURE	T - TEMPERATURE	

4 HVAC - AC-1 CONTROLS DIAGRAM
M6.1 SCALE: NTS

Publix SUPER MARKETS

CORPORATE OFFICES, FACILITIES DESIGN
BOX 407, LAKELAND, FL 33802
(863) 680-5295
PHYSICAL ADDRESS:
3300 PUBLIX CORPORATE PARKWAY,
LAKELAND, FL 33811-3311

PUBLIX FACILITIES DESIGN DEPARTMENT

DAVID ... BEE, AIA
ARCHITECT FL REG. ...

DAVID RUBIN
ARCHITECT FL REG. 9255, GA REG. 11881, SC REG. 7477, AL REG. 6234, TN REG. 103497, ... 12432, VA REG. 0401017097

JOHN W. KITCHENS, PE
CIVIL/STRUCTURAL FL REG. 45277, GA REG. 020251, SC REG. 16340, AL REG. 20382, TN REG. 101507

PAUL C. HARMAN, PE
STRUCTURAL FL REG. 51959, GA REG. 27740, SC REG. 21754, AL REG. 24905, TN REG. 107882, NC REG. 39673, VA REG. 0402055022

JOHN J. CARAMALIS, PE
MECHANICAL FL REG. 43889, GA REG. 021246, SC REG. 16521, AL REG. 20581, TN REG. 108507, VA REG. 0402055478

ANTHONY CLEMENTI, PE
MECHANICAL FL REG. 54781, GA REG. 31882, SC REG. 25591, AL REG. 28469, TN REG. 111382, NC REG. 039664, VA REG. 0402056137

RAYMOND J. SIRIANNI, PE
ELECTRICAL FL REG. 54085, GA REG. 025636, SC REG. 19743, AL REG. 23065, TN REG. 108038, NC REG. 039963, VA REG. 0402055379

© COPYRIGHT 2018
PUBLIX SUPER MARKETS, INC.

THESE CONSTRUCTION DOCUMENTS ARE THE PROPERTY OF PUBLIX SUPER MARKETS, INC. AND ARE NOT TO BE COPIED OR REUSED FOR ANY SPECIFIC BUILDING WITHOUT WRITTEN PERMISSION. THESE DRAWINGS SHALL NOT BE DUPLICATED WITHOUT PRIOR WRITTEN PERMISSION OF PUBLIX SUPER MARKETS, INC.

THE DESIGN INDICATED IN THESE CONSTRUCTION DOCUMENTS DOES; TO THE BEST OF MY KNOWLEDGE, INFORMATION, AND BELIEF; COMPLY WITH THE APPLICABLE MINIMUM BUILDING CODES

PLOT DATE:
August, 21 2018

No.	Description	Date

STORE NUMBER
1687
Tattersall Park

US 280 & Highway 19
Hoover
Shelby Co., AL

48.10
V0514-2018
SIENNA LITE

HVAC CONTROLS

As indicated

M6.1

PERMIT SET DATE 8/29/2018 11:29:27 AM

Order Plans @ WWW.LDLine.com