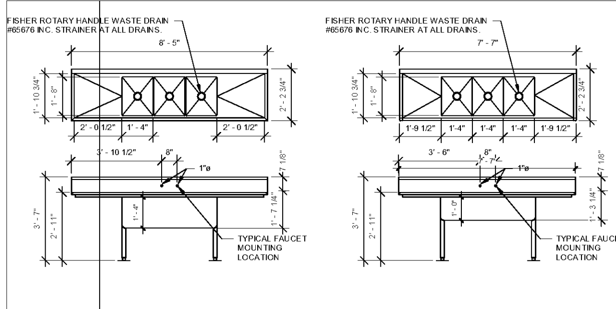

DELI & BAKERY SINKS

T & S BRASS MODEL B-2832-40 MIXING FAUCET BODY & B-156 ADF W/ 12" SPOUT

PRODUCE SINK

T & S BRASS MODEL B-2832-40 MIXING FAUCET BODY & B-156 ADF W/ 12" SPOUT

SCULLERY SINK

T & S BRASS MODEL B-2832-40 MIXING FAUCET BODY & B-156 ADF W/ 12" SPOUT

MEAT DEPARTMENT SINK

T & S BRASS MODEL B-2832-40 MIXING FAUCET BODY & B-156 ADF W/ 12" SPOUT

1 P4.1 PLUMB - 3 COMPARTMENT SINK
SCALE: 3/8" = 1'-0"

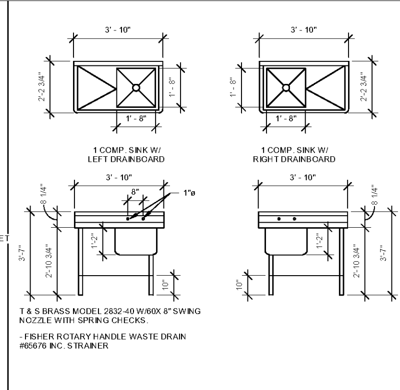

T & S BRASS MODEL 2832-40 W/60X 8" SWING NOZZLE WITH SPRING CHECKS.

- FISHER ROTARY HANDLE WASTE DRAIN #65676 INC. STRAINER

2 P4.1 PLUMB - 1 COMP. SINK
SCALE: 3/8" = 1'-0"

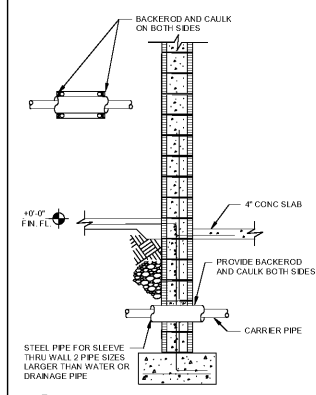

3 P4.1 PLUMB - SLEEVE THRU WALL
SCALE: N.T.S.

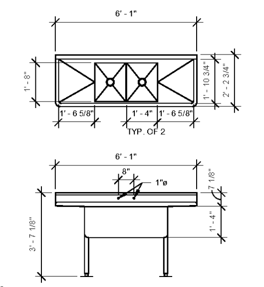

4 P4.1 PLUMB - DELI & PRODUCE PREP SINKS
SCALE: 3/8" = 1'-0"

- T & S BRASS MODEL B-2832-40 MIXING FAUCET BODY & B-156 ADF W/ 12" SPOUT
- FISHER ROTARY HANDLE WASTE DRAIN #65676 INC. STRAINER

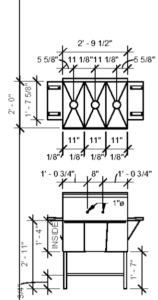

5 P4.1 PLUMB - NARROW 3 COMP. BAKERY SINK
SCALE: 3/8" = 1'-0"

- T & S BRASS MODEL B-2832-40 MIXING FAUCET BODY & B-156 ADF W/ 12" SPOUT
- FISHER ROTARY HANDLE WASTE DRAIN #65676 INC. STRAINER

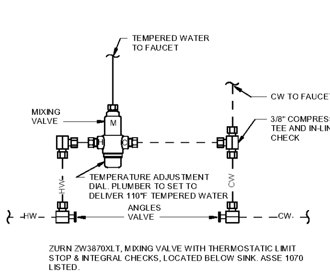

ZURN ZW3870XLT, MIXING VALVE WITH THERMOSTATIC LIMIT STOP & INTEGRAL CHECKS, LOCATED BELOW SINK. ASSE 1070 LISTED.

6 P4.1 PLUMB - BELOW SINK THERMOSTATIC MIXING VALVE DETAIL
SCALE: N.T.S.

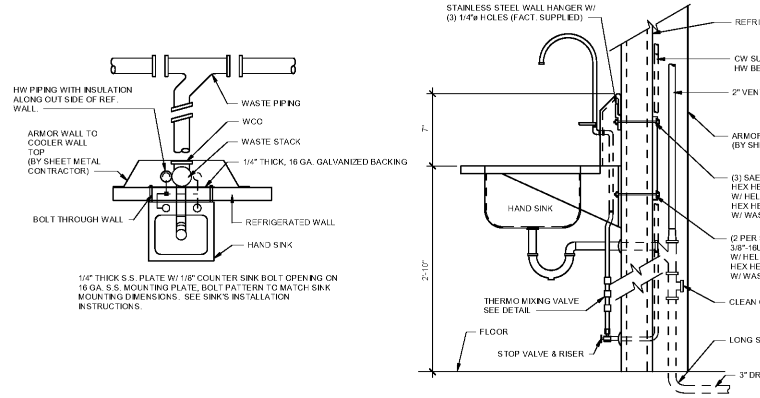

1/4" THICK S.S. PLATE W/ 1/8" COUNTER SINK BOLT OPENING ON 16 GA. S.S. MOUNTING PLATE, BOLT PATTERN TO MATCH SINK MOUNTING DIMENSIONS. SEE SINK'S INSTALLATION INSTRUCTIONS.

7 P4.1 PLUMB - SINK'S POTABLE & SANITARY PIPING EXTERNAL OF REFRIG. WALL
SCALE: N.T.S.

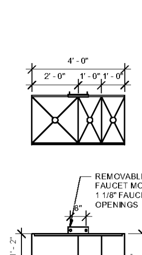

8 P4.1 PLUMB - 3 COMP. MOBILE SEAFOOD SINKS
SCALE: 3/8" = 1'-0"

T & S BRASS MODEL B-2832-40 MIXING FAUCET BODY W/ B-156 ADF W/ 12" SPOUT, FLEXIBLE VINYL HOSE ASSEMBLY W/ QUICK DISCONNECTS T & S MODEL # B-2395-03, FISHER ROTARY HANDLE WASTE DRAIN #65676 INC. STRAINER

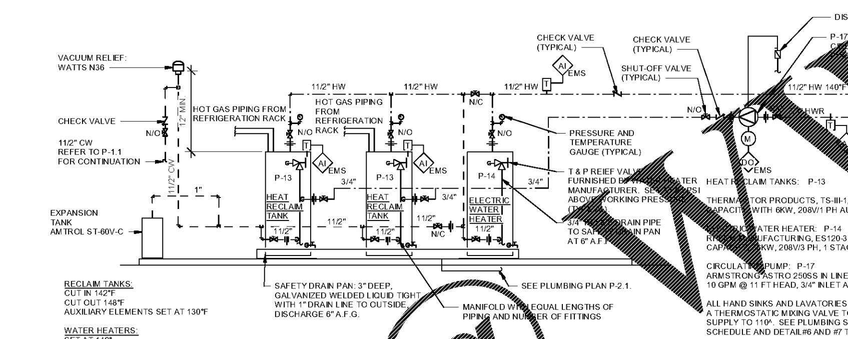

HEAT RECLAIM TANKS: P-13

THERMA-STOR PRODUCTS, TS-III-1, 119 GALLON STORAGE CAPACITY WITH 6KW, 208V/1 PH AUX. HEATING ELEMENT

ELECTRIC WATER HEATER: P-14
RHEEM MANUFACTURING, ES120-36-G, 120 GALLON STORAGE CAPACITY, 36KW, 208V/3 PH, 1 STAGE (9) 4 KW ELEMENTS

CIRCULATING PUMP: P-17
ARMSTRONG ASTRO 250SS IN LINE BOOSTER PUMP 10 GPM @ 11 FT HEAD, 3/4" INLET AND OUTLET, 1/6 HP.

ALL HAND SINKS AND LAVATORIES SHALL HAVE A THERMOSTATIC MIXING VALVE TO TEMPER HW SUPPLY TO 110^. SEE PLUMBING SPECIFICATION SCHEDULE AND DETAIL#6 AND #7 THIS SHEET

RECLAIM TANKS:
CUT IN 142°F
CUT OUT 148°F
AUXILIARY ELEMENTS SET AT 130°F

WATER HEATERS:
SET AT 140°

CIRCULATING PUMP:
SET AT 140°F
SCHEDULE TO RUN FROM 4:00A.M. TO 12:00A.M. OR TO MATCH STORE OPERATING HOURS.

ALL HAND SINKS AND LAVATORIES SHALL HAVE A THERMOSTATIC MIXING VALVE TO TEMPER HW SUPPLY TO 110^. SEE PLUMBING SPECIFICATION SCHEDULE AND DETAIL#6 AND #7 THIS SHEET

HEAT RECLAIM TANKS AND ELECTRIC WATER HEATER SHALL BE PREPIPED WITH ALL ACCESSORIES IN THE MECHANICAL CENTER BY HILLPHOENIX.

NOTES:
AI - ANALOG INPUT
DO - DIGITAL OUTPUT
M - MOTOR
T - TEMPERATURE

9 P4.1 PLUMB - ELECTRIC WATER HEATER / HEAT RECLAIM PIPING
SCALE: N.T.S.

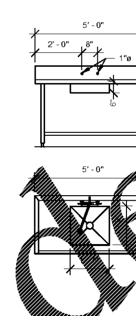

T & S BRASS MODEL B-0133 MOD-16 PRE RINSE WITH B-0107-J SPRAY VALVE 1.07 GPM

ELKAY LK18 GRID STRAINER FOR PRE-RINSE SINK ONLY

10 P4.1 PLUMB - PRE-RINSE SINK
SCALE: 3/8" = 1'-0"

FLOOR DRAINS, CLEAN OUTS, ETC. SCHEDULE

MARK	DESCRIPTION	SMITH	ZURN	JOSAM	PLASTIC ODDITIES PVC / ABS	COMMENTS
D-1	12" DIA. FLOOR DRAIN, CAST IRON GRATE, SHALLOW BODY: WORK AREAS: CONCRETE	2140-FBS-(M)-SSB	Z-509(-P)-S-Y			PERFORATED SEDIMENT BUCKET, TRAP PRIMER WHERE INDICATED ON SHEET P-2.1 SEE TRAP PRIMER SCHEMATIC DETAIL
D-2	12" DIA. FLOOR DRAIN, NICKEL BRONZE GRATE PERFORATED SEDIMENT BUCKET, SHALLOW BODY, SEAFOOD DEPARTMENT WITH/3" OUTLET.	2233 CO3-NB-SSB-SSM	ZN-509-S-Y-SS			TRAP PRIMER SEE TRAP PRIMER SCHEMATIC DETAIL
D-3	6" DIA. FLOOR DRAIN, NICKEL BRONZE GRATE, TOILET ROOMS W/3" OUTLET	2010-NB-P050	ZN-415B-P			TRAP PRIMER SEE TRAP PRIMER SCHEMATIC DETAIL
TD-1	6" WIDE TRENCH DRAIN, REFER TO DIM. PLUMB PLAN FOR LENGTH	DRAIN #9930 GRATE #9870-461M	Z-886-DB-DG			-DUCTILE IRON GRATE: SMITH-M, ZURN-DG. -BOTTOM DOME STRAINER. -SEE DETAIL ACCORDINGLY.
TD-2	6" WIDE TRENCH DRAIN W/ STAINLESS STEEL GRATE. LENGTH VARIES, SEE DIM. PLUMB. PLANS FOR DETAILS.	DRAIN #9930 GRATE #9870-450SS	Z-886-DB-FS			-STAINLESS STEEL GRATE: SMITH-FS, ZURN-SS. -BOTTOM DOME STRAINER.
TD-3	12" WIDE PRESLOPED EXT. H.D. TRENCH DRAIN W/ SLOTTED DUCTILE IRON GRATE, REFER TO DRAWING P-3 FOR LENGTH.		Z-882-DGE			CLASS E EXTRA HEAVY DUTY GRATE
TD-4	12" WIDE STAINLESS STEEL TRENCH DRAIN W/ REINFORCED S.S. SLOTTED GRATE, END CAPS AND 3" BOTTOM OUTLET.		Z-895-GG			
FS-1	12" DIA. FLOOR SINK, PVC 1/2 GRATE SECONDARY STRAINER	305-H03-12-14	FD-2370-DS-H-Y		RBH-300 H	
FS-2	12" DIA. FLOOR SINK, 8" DEEP, ABS 1/2 GRATE SECONDARY STRAINER	3061-12-FBS	ZN-1950-2-23-31		RBH-301 H	WITH REMOVABLE SECONDARY STRAINER
CO-1	FLOOR CLEAN OUT, POLISHED NICKEL BRONZE TOP, TERRAZZO AREAS	4180	ZN-1400-Z			SEE FLUSH CLEANOUT DETAIL
CO-2	FLOOR CLEAN OUT, CAST IRON OR STAINLESS STEEL COVER, CONCRETE TRAFFIC AREAS	4237	Z-1400-HD OR ZS-1400-HD			SEE FLUSH CLEANOUT DETAIL
CO-3	FLOOR CLEAN OUT, NICKEL BRONZE VENEER, HEAVY DUTY COVER OR STAINLESS STEEL, TILE AREAS	4031-NB	ZN-1400-HD OR ZS-1400-HD			SEE FLUSH CLEANOUT DETAIL
WCO	WALL CLEAN OUT, CAST IRON TEE, W/ BRONZE PLUG, S.S. COVER	4531	Z-1446-BP			SEE WALL CLEANOUT DETAIL
CD-1	4" CASE DRAIN, US PLASTICS 4X3 PVC REDUCER, CHARLOTTE 706-X P-TRAP					SEE REFRIGERATED CASE DETAIL
CD-2	6" CASE DRAIN, US PLASTICS 6X4 AND 4X3 REDUCERS, CHARLOTTE 706-X P-TRAP					SEE REFRIGERATED CASE DETAIL

PLUMBING LEGEND

1.	—S—	SOIL LINE	13.	—G—	GAS LINE
2.	—W—	WASTE LINE	14.	CD-1	CASE DRAIN W / P-TRAP
3.	—WS—	WASTE STACK	15.	—FW—	FW-FILTERED WATER
4.	SW	SAFE WASTE	16.	TD-1	TRENCH DRAIN
5.	—V—	VENT LINE	17.		CHW-CHILLED WATER
6.	VTR	VENT-THRU-ROOF	18.	BFP	BACKFLOW PREVENTER
7.	CW	CW-COLD WATER	19.	VB	VACUUM BREAKER
8.	HW	HW-HOT WATER	20.	—GW—	GREASE WASTE LINE
9.	WCO	WALL CLEANOUT	21.	—TW—	TEMPERED WATER
10.	CO	FLOOR CLEANOUT	22.	—HWR—	HOT WATER RETURN
11.	D-1	FLOOR DRAIN	23.		BALANCING VALVE
12.	HB	3/4" HOSE BIBB	24.		HW AND CW BALL VALVES
			25.	FS-1	FLOOR SINK

PLUMBING FIXTURE SCHEDULE

MARK	FIXTURE	AMERICAN STANDARD OR AS NOTED DESCRIPTION	SERVICE CONNECTIONS: TRAP/DRAIN CONNECTION	CW	HW	ELEC. VOLT / PHASE	SUPPLIED BY	REMARKS
P-1	WC - WATERCLOSET	**MODEL:** MADERA 2234.001 ELONGATED **SEAT:** BEMIS 95CT EXTRA HEAVY DUTY WHITE SEAT **FLUSH VALVE:** SLOAN 111-1.28 OR ZURN Z6000AV-HET	4"	1"	----	------	PLUMBER	- FLOOR MOUNTED - 1.28 GPF - 481310-100 BOLT CAPS
P-2	WC - WATERCLOSET (H.C.)	**MODEL:** MADERA 3043.001 ELONGATED **SEAT:** BEMIS 95CT EXTRA HEAVY DUTY WHITE SEAT, 17" HT. **FLUSH VALVE:** SLOAN 111-1.28 OR ZURN Z6000AV-HET	4"	1"	----	------	PLUMBER	- FLOOR MOUNTED - 1.28 GPF - 481310-100 BOLT CAPS
P-2A	WC - WATERCLOSET	**MODEL:** AFWALL 334351.712 ELONGATED **SEAT:** BEMIS 95CT EXTRA HEAVY DUTY WHITE SEAT, 17" HT. **FLUSH VALVE:** SLOAN 111-1.28 OR ZURN Z6000AV-HET	4"	1"	----	------	PLUMBER	- WALL MOUNTED - 1.28 GPF - 481310-100 BOLT CAPS
	CARRIER SYSTEM (DOUBLE HORIZONTAL)	**MODEL:** ZURN ZN1201-ND4 NARROW BACK-TO-BACK NO - HUB WATER CLOSET CARRIER SYSTEM						
P-3	UR - URINAL	**MODEL:** WASHBROOK #6590.525 OR ZURN Z5755-U OMNI-FLO **FLUSH VALVE:** SLOAN 186-0.125 DBP SMO	2"	3/4"	----	------	PLUMBER	- WALL MOUNTED 17" TO LIP ON H.C. - 0.125 GPF
P-4	LAV - LAVORTORY	**MODEL:** MURRO 0955.000 W/ KNEE GUARD 0059.02 **FAUCET:** SGL. HOLE DECK MTD, HAND FREE FAUCET W/ 1.5 GPM AERATOR, PLUG IN TRANSFORMER - SLOAN EFX-200.503.0010 OR CHICAGO 116.121.1.AB.1 AC **DRAIN:** CHICAGO 327-X GRID STRAINER **WATER SAVER TRAP PRIMER:** ZURN Z1021 **ANGLE STOPS**	1-1/4"	1/2"	1/2"	120 / 1	SINK & HARDWARE BY PLUMBER	- **MIXING VALVE:** ZURN ZW3870XLT (REFER TO DETAIL # 6 DRAWING P-4.1) - SET FAUCET TO 10 SECOND DISPENSE TIME
P-5	LAV - LAVORTORY	**MODEL:** CORIAN SINK 810 **FAUCET:** SGL. HOLE DECK MTD, HAND FREE FAUCET W/ 1.5 GPM AERATOR, PLUG IN TRANSFORMER - SLOAN EFX-200.503.0010 OR CHICAGO 116.121.1.AB.1 AC **DRAIN:** CHICAGO 327-X GRID STRAINER **WATER SAVER TRAP PRIMER:** ZURN Z1021 **ANGLE STOPS**	1-1/4"	1/2"	1/2"	120 / 1	SINK BY [illegible] HARDWARE BY PLUMBER	- **MIXING VALVE:** ZURN ZW3870XLT (REFER TO DETAIL #6 DRAWING P-4.1) - SET FAUCET TO 10 SECOND DISPENSE TIME
P-6	LAV - LAVORTORY (MOBILE)	NOT USED						
P-7	HAND SINK	**MODEL:** ELKAY CHS1716LRS4 18 GA TYPE 304 S.S. 16-3/4 x 15-1/2 **FAUCET:** WALL / BACKSPLASH MOUNT, 4" C/C W/ 4" WRIST ACTION HANDLES, SWIVEL GOOSENECK W/ 1.0 GPM AERATOR - T&S BRASS B-2459 OR CHICAGO #W4W-GN2AE35-317ABCP OR FISHER **DRAIN:** ELKAY LK-8, 17 GA C.P.C.B. P-TRAP W/C.O. **ANGLE STOPS**	1-1/2"	1/2"	1/2"	------	PLUMBER	- WALL MOUNTED - MIXING VALVE: ZURN ZW3870XLT (REFER TO DETAIL #6 DRAWING P-4.1)
P-8	S - SINK	**MODEL:** ELKAY DLR3322-110 DOUBLE BOWL SINK **FAUCET:** DECK MOUNT, 8" C/C W/ 12" SWING SPOUT W/ 1.0 GPM AERATOR - T&S BRASS B-1123 WITH [illegible] NOZZLE OR [illegible] # 527-L12 OR FISHER #3313 **DRAIN:** FISHER DRAINKING WASTE VALVE [illegible] W/ VR FLAT STRAINER THERE SHALL BE NO ALTERNATES TO FISHER DRAIN VALVE	1-1/2"	1/2"	[illegible]	------	PLUMBER	- CABINET MOUNTED
P-9	S - SINK	**MODEL:** STAINLESS STEEL SINK, FURNISHED BY PUBLIX AND INSTALLED BY PLUMBER W/ [illegible] **FAUCET:** WALL MOUNT BASE [illegible] ASSEMBLY [illegible] (REFER TO DETAILS [illegible]-4.1) - T&S BRASS [illegible] W/ B156A[illegible] CHICAGO #540-LDL12[illegible] OR FISHER #2200-CV [illegible] 12 ADF **DRAIN:** FISHER DRAINKING WASTE [illegible] #65676 W/ [illegible] STRAINER THERE [illegible] BE NO ALTERNATES TO [illegible] DRAIN VALVE	1-1/2"	1/2"	1/2"	------	SINK BY PUBLIX HARDWARE (FAUCETS, DRAINS, ETC.) BY PLUMBER	- FLOOR AND WALL MOUNTED - SEE APPROPRIATE SINK DETAILS AND / OR ELEVATION
P-10	S - SINK	**MODEL:** [illegible] LRAD-1720553, 17 X 20 X [illegible] S.S. COUNTERTOP SINK **FAUCET:** DECK MOUNT, 8" C/C W/ 12" SWIVEL GOOSENECK SPOUT 4" WRIST BLADE [illegible] T&S BRASS B-1139 133 [illegible] STYLE SWIVEL GOOSENECK B-0199-01 AER[illegible] OR CHICAGO #W8D[illegible]2AE35-317AB, 1.5 GPM AERATOR OR F[illegible] #90451 **DRAIN:** ELKAY LK[illegible] 17 GA C.P.C.B. [illegible]RAP W/ CLEANOUT **ANGLE STOPS**	1-1/2"	1/2"	1/2"	------	PLUMBER	- CABINET MOUNTED - MIXING VALVE: ZURN ZW3870XLT REFER TO DETAIL #6 DRAWING P-4.1
P-11	S - SINK	**MODEL:** ELKAY BCR-[illegible] SELF RIMMING - 12 x 10 x 6 S.S. SINK **FAUCET:** DECK MOUNT [illegible] W/ 12" RIGID GOOSENECK SPOUT 4" WRIST HANDLES, ANGLE STOPS W/ 1.0 GPM AERATOR - T&S BRASS B-892 OR CHICAGO #[illegible]-317ABCP OR FISHER #92290 **DRAIN:** ELKAY LK-36 PVC TRAP	1-1/2"	1/2"	1/2"	------	PLUMBER	- CABINET MOUNTED - MIXING VALVE: ZURN ZW3870XLT REFER TO DETAIL #6 DRAWING P-4.1
P-12	KS/FS - SINK	**MODEL:** MOBILE STAINLESS STEEL SINK, FURNISHED BY PUBLIX AND INSTALLED BY PLUMBER, FLEXIBLE VINYL HOSE ASSEMBLY W/ QUICK DISCONNECTS **FAUCET:** PRE-RINSE UNIT, BACKSPLASH MOUNT, 8" C/C W/ SPRING ACTION FLEXIBLE GOOSENECK, WALL BRACKET ADD-ON-FAUCET W/ 12" SWING SPOUT W/ 2.2 GPM AERATOR - T&S BRASS 002832-40 W/ B-156 ADF OR CHICAGO #540-LDL12ABCP OR FISHER #2200-CV WITH 2901-12 ADF **DRAIN:** FISHER DRAINKING WASTE VALVE #65676 W/ VR FLAT STRAINER THERE SHALL BE NO ALTERNATES TO FISHER DRAIN VALVE	1-1/2"	1/2"	1/2"	------	SINK BY PUBLIX HARDWARE (FAUCETS, DRAINS, ETC.) BY PLUMBER	- MOBILE
P-13	HWH - HOT WATER STORAGE TANK	**MODEL:** THERMA-STOR III-1, 119 GALLON, 6 KW AUX. ELEMENT 3" DEEP DRAIN PAN;____ MBH RECLAIM HEAT FROM REFRIGERATION UNIT #__, ____ MBH RECLAIM HEAT FROM REFRIGERATION UNIT #___	------	1-1/2"	1-1/2"	208 / 1	PUBLIX / HILLPHOENIX	- SEE WATER HEATER DETAIL FOR PIPNG
P-14	EWH - ELECTRIC WATER HEATER	**MODEL:** RHEEM / RUDD E120(A)-36-GS, 120 GALLON STORAGE 36 KW, 3 STAGES OF CAPACITY 149 GPH RECOVERY @ 100° ΔT, TPR VALVE, UL LISTED	------	1-1/2"	1-1/2"	208 / 1	PUBLIX / HILLPHOENIX	- SEE WATER HEATER DETAIL FOR PIPNG & EXPANSION TANK
	NOT USED							
P-15	HYD - HYDRANT	**MODEL:** SMITH #5519 SINGLE TAP NON-FREEZE RECESS HYDRANT W/ INTEGRAL VACUUM BREAKER (FOR STORES NORTH OF FLORIDA) **MODEL:** SMITH #5519-SAP SINGLE TAP RECESS HYDRANT W/ INTEGRAL VACUUM BREAKER (FORFLORIDA STORES ONLY)	------	3/4"	------	------	PLUMBER	- WALL RECESSED +18"
P-16	HYD - HYDRANT	**MODEL:** SMITH #5560QT HW-CW NON-FREEZE RECESS HYDRANT W/ VACUUM BREAKER (FOR STORES NORTH OF FLORIDA) **MODEL:** SMITH #5560QT-SAP HW-CW RECESS HYDRANT W/ INTEGRAL VACUUM BREAKER (FORFLORIDA STORES ONLY)	------	3/4"	3/4"	------	PLUMBER	- WALL RECESSED +18"
P-17	CP- CIRCULATING PUMP	**MODEL:** ARMSTRONG ASTRO 250 SS, IN LINE BOOSTER PUMP 10 GPM @ 11 FEET OF HEAD, 3/4" INLET AND OUTLET, 1/6 HP	------	------	3/4"	120 / 1	PUBLIX / HILLPHOENIX	- MOUNTED ON THE HWR IN MECH. CENTER - SEE WATER HEATER DETAIL
P-18	EDF - ELECTRIC DRINKING FOUNTAIN DUAL LEVEL	**MODEL:** ELKAY EZSTL8C OR OASIS PG8ACSL DUAL LEVEL, BARRIER FREE, 8.0 GPH, PVC TRAP, COPPER RISER STOPS	1-1/2"	1/2"	------	120 / 1	PLUMBER	- WALL MOUNTED
P-19	EDF - ELECTRIC DRINKING FOUNTAIN	**MODEL:** ELKAY EZS-8 OR OASIS PG8AC BARRIER FREE, 8.0 GPH, PVC TRAP, COPPER RISER STOPS	1-1/4"	1/2"	------	120 / 1	PLUMBER	- WALL MOUNTED
P-20	IM - ICE MACHINE	ICE MACHINE BY PUBLIX, ROUGH IN AND HOOK UP BY PLUMBER WITH STOP VALVE	------	1/2" FW	------	------	PUBLIX	- FLOOR & WALL MOUNTED
P-21	DW - DISHWASHER	**MODEL:** HOBART CL44E DISHWASHER, ELECTRIC, 15KW HEAT, SEE PLAN FOR ORIENTATION. PROVIDE W.H. ARRESTOR, STOP VALVE, INDIRECT WASTE TO FS,W/MANUFACTURER SUPPLIED DRAIN WATER TEMPERING KIT **PRE-RINSE FAUCET:** 8" C/C BACKSPLASH MOUNTED W/ SPRING ACTION FLEXIBLE GOOSENECK W/ SPRAY HEAD (1.15 GAL/MIN @ 60 PSI), WITH WALL BRACKET. T&S BRASS MODEL #B-133 OR CHICAGO #510-GCVB613AL12AB OR FISHER #13390 **DRAIN:** ELKAY LK18 GRID STRAINER FOR PRE-RINSE SINK	2"	1/2"	1/2" FW 1/2"	208 / 3	MACHINE BY PUBLIX CONNECTIONS, PRV & PRE-RINSE FAUCET BY PLUMBER	- FREE STANDING - H/C WATER FOR PRE-RINSE SINK - P-28c HW FILTER
P-22	CB - CATCH BASIN	ZURN FLOW THROUGH Z887-DGF-24-HD CATCH BASIN 24 x 24 x 24 WITH P817-DGF-24-HD GRATE AND 6" OUTLET 6" ABOVE BOTTOM	------	------	------	------	PLUMBER	- LOCATED IN TRUCK WELL
P-23	CW - CAN WASH	**FAUCET:** SERVICE SINK FAUCET, ECCENTRIC STOPS WITH LONG SPOUT AND VACUUM BREAKER, 1/2" INLET POLISHED CHROME W/ CONCEALED SINGLE CONTROL VALVE MODEL #13676 W/ CROSS HANDLE - T&S BRASS MODEL #B-665-BSTR WITH VALVE #B-1025-1 OR CHICAGO #897RCP OR FISHER #8261 **DRAIN:** SMITH #2690 OR ZURN #Z1982-31	3"	1/2"	1/2"	------	PLUMBER	- FLOOR AND WALL MOUNTED AT +60" SEE DETAIL - PERFORATED S.S. - BUCKET W/ S.S. - MESH LINER - VACUUM BREAKER: WATTS 288
P-25	SP - SUMP PUMP	GOULDS SERIES 3887 MODEL #WSO718BF 90 GPM AT 20.0 FEET TDH, 3/4 HP, AUTO CONTROL	2" DISCHARGE	------	------	208 / 1	PLUMBER	- MOUNTED IN SUMP (SEE S.P. DETAIL, ALL BY PLUMBER)
P-26	MS - MOP SINK	FLORESTONE MOLDED PLASTIC MOP SINK W/SS RIM GUARD #MSR-2424 **FAUCET:** T&S BRASS MODEL # B-665-BSTR SERVISE SINK FAUCET WITH VACUUM BREAKER, STAINLESS STEEL RIM GUARDS, 5' HOSE WITH CLAMP, MOP HANGER, FLAT STRAINER, AND BACKSPLASH PANELS.	3"	1/2"	1/2"	------	PLUMBER	- FLOOR AND WALL - MOUNTED AT 36" - D-1 IN BASIN
P-27	S - SINK (FLORAL)	WIN-HOLT WH-TOP-2632RT162/ME-PBX (4 HOLES) S.S. SINK, **FAUCET:** DECK MOUNT 8" SWING NOZZLE, 4" WRIST HANDLES, 4' VINYL HOSE, COPPER RISER STOPS, 1.0 GPM AERATOR T&S BRASS B-1172 OR CHICAGO B-WH-4, B-133X GOOSENECK **DRAIN:** LK-35	1-1/2"	1/2"	1/2"	------	SINK BY PUBLIX FAUCET, DRAIN, P-TRAP, COP. RISERS, SHUT OFF VALVES, MIXING VALVES BY PLUMBER	- CABINET MOUNTED - **MIXING VALVE:** ZURN ZW3870XLT (REFER TO DETAIL #6 DRAWING P-4.1)
P-28	WF - WATER FILTER	3M WATER FILTER SYSTEM (SEE DETAILS 1/P-5.1 & 3/P-5.1 FOR MODELS)	------	VARIES	------	------	PLUMBER THROUGH SOURCE REFRIGERATION	- WALL MOUNTED (REFER TO DETAILS #1 & 3 ON P-5.1)
P-29	NOT USED							
P-30	PAN WASHER	**MODEL:** LVO FL-10 FRONT LOAD PAN WASHER, 7.5 HP PUMP, 6.5 GAL/CYCLE, ELECTRIC - 9 KW HEATING ELEMENT, OEM EXHAUST FAN AND DRAIN LINE TEMPERING KIT	1-1/2"	1/2"	1/2"	208 / 3	MACHINE BY PUBLIX, CONNECTIONS BY PLUMBER	- FREE STANDING
P-31	NOT USED							
P-32	NOT USED							
P-33	NOT USED							
P-34	NOT USED							
P-35	POINT OF USE (HW HEATER)	EEMAX MODEL MT005240T TANKLESS WATER HEATER, 3.6 KW, 17A @ 208V, 1 GPM AT 25°F ΔT, HIGH TEMPERATURE LIMIT SWITCH, REPLACEABLE CARTRIDGE NICKEL CHROME ELEMENT, PROVIDE SPRING CHECK VALVE	------	------	1/2"	208 / 1	PLUMBER	- UNDERSINK MOUNTED - **MIXING VALVE:** ZURN ZW3870XLT (REFER TO DETAIL #6 DRAWING P-4.1)

Publix SUPER MARKETS

CORPORATE OFFICES, FACILITIES DESIGN
BOX 407, LAKELAND, FL 33802
(863) 680-5295
PHYSICAL ADDRESS:
3300 PUBLIX CORPORATE PARKWAY,
LAKELAND, FL 33811-3311

PUBLIX FACILITIES DESIGN DEPARTMENT
DAVID [illegible]BEE, AIA
ARCHITECT FL [illegible]
DAVID RUBIN
ARCHITECT FL REG. 9255[illegible] GA REG. 11[illegible] SC REG. 7477 AL REG. 6234 TN REG. 103497 [illegible] 12432 VA REG. 0401017097
JOHN W. KITCHENS, PE
CIVIL/STRUCTURAL FL REG. 45277 GA REG. 020251 SC REG. 16340 AL REG. 20382 TN REG. 101507
PAUL C. HARMAN, PE
STRUCTURAL FL REG. 51959 GA REG. 27740 SC REG. 21754 AL REG. 24905 TN REG. 107882 NC REG. 39673 VA REG. 0402055022
JOHN J. CARAMALIS, PE
MECHANICAL FL REG. 43889 GA REG. 021246 SC REG. 16521 AL REG. 20581 TN REG. 108507 VA REG. 0402055478
ANTHONY CLEMENTI, PE
MECHANICAL FL REG. 54781 GA REG. 31882 SC REG. 25591 AL REG. 28469 TN REG. 111382 NC REG. 039664 VA REG. 0402056137
RAYMOND J. SIRIANNI, PE
ELECTRICAL FL REG. 54085 GA REG. 025636 SC REG. 19743 AL REG. 23065 TN REG. 108038 NC REG. 039963 VA REG. 0402055379

© COPYRIGHT 2018
PUBLIX SUPER MARKETS, INC.

THESE CONSTRUCTION DOCUMENTS ARE THE PROPERTY OF PUBLIX SUPER MARKETS, INC. AND ARE NOT TO BE COPIED OR REUSED FOR ANY SPECIFIC BUILDING WITHOUT WRITTEN PERMISSION. THESE DRAWINGS SHALL NOT BE DUPLICATED WITHOUT PRIOR WRITTEN PERMISSION OF PUBLIX SUPER MARKETS, INC.

THE DESIGN INDICATED IN THESE CONSTRUCTION DOCUMENTS DOES; TO THE BEST OF MY KNOWLEDGE, INFORMATION, AND BELIEF; COMPLY WITH THE APPLICABLE MINIMUM BUILDING CODES

PLOT DATE:
August, 21 2018

No.	Description	Date

STORE NUMBER
1687
Tattersall Park

US 280 & Highway 19
Hoover
Shelby Co., AL

48.10
V0514-2018
SIENNA LITE

PLUMBING SCHEDULES AND DETAILS

As indicated

P4.1

PERMIT SET DATE 8/29/2018 11:31:51 AM

Order Plans @ www.LDLine.com