TOILET ACCESSORY LEGEND

Symbol	Description
* BCS	BABY CHANGING STATION
CH	COAT HOOK - SEE SPECIFICATIONS
MR1	MIRROR - 16" x 36" - WITH S.S. FRAME - SEE SPECIFICATIONS
MR2	MIRROR - 18" x 42" - SEE SPECIFICATIONS (MOUNT ON INSIDE OF RESTROOM DOOR OR WHERE INDICATED ON THE PLAN)
MR3	MIRROR - 48" x 36" - WITH S.S. FRAME - SEE SPECIFICATIONS
MR4	MIRROR - 55" x 36" - ILLUMINATED MIRROR - SEE SPECIFICATIONS
P-1	WATER CLOSET - SEE PLUMBING SCHEDULE
P-2	WATER CLOSET - ADA COMPLIANT, SEE PLUMBING SCHEDULE
P-3	URINAL - ADA COMPLIANT, SEE PLUMBING SCHEDULE
P-4	WALL HUNG LAVATORY - ADA COMPLIANT, SEE PLUMBING SCHEDULE
P-5	LAVATORY - GLACIER WHITE CORIAN MODEL 810 W/ INTEGRATED MATTERHORN VANITY TOP W/ BACK SPLASH SEE DETAILS FOR ADDITIONAL INFORMATION. REFER TO PLUMBING PLANS FOR ADDITIONAL PLUMBING FIXTURES.
P-18	WATER HI/LO COOLER - ADA COMPLIANT, SEE PLUMBING SCHEDULE
P-19	WATER SINGLE COOLER - ADA COMPLIANT, SEE PLUMBING SCHEDULE
* PTD	PAPER TOWEL DISPENSER - KIMBERLY CLARK
R18	GRAB BAR - 18" S.S., SEE SPECIFICATIONS TO BE USED ONLY WHERE ANSI A117.1 IS IMPLEMENTED
R36	GRAB BAR - 36" S.S., SEE SPECIFICATIONS
R42	GRAB BAR - 42" S.S., SEE SPECIFICATIONS
* SCD	SEAT COVER DISPENSER - KIMBERLY CLARK
* SD	SOAP DISPENSER - KIMBERLY CLARK
* SNR	SANITARY NAPKIN RECEPTACLE - RUBBERMAID MODEL 6140-00; IN WOMEN'S OR UNISEX RESTROOMS ONLY
* TTD	TOILET TISSUE DISPENSER - KIMBERLY CLARK
* TR1	TRASH RECEPTACLE - (CONTINENTAL MODEL #2818 PLASTIC WASTEBASKET)
* TR3	TRASH RECEPTACLE (CONTINENTAL MODEL #8322 WALL HUGGER RECEPTACLE WITH DROP SHOT LID WHEN APPLICABLE)
EHD	ELECTRIC HAND DRYER - ASI MODEL 0160 STD. WHITE (ALTERNATE FOR REMODELS ONLY)

* DENOTES ITEMS THAT WILL BE FURNISHED AND INSTALLED BY PUBLIX

NOTE: FOR FLUSH VALVE ASSEMBLY - SEE MECHANICAL SPECIFICATIONS

FINISHES & COLORS LEGEND (SIENNA & SIENNA LITE)

Code	Description
IP-	INTERIOR PAINT
IP-1	SHERWIN WILLIAMS SW 6102 PORTABELLO
IP-2	SHERWIN WILLIAMS SW 0042 RUSKIN ROOM GREEN
IP-3	(NOT USED)
IP-4	SHERWIN WILLIAMS SW 6119 ANTIQUE WHITE
IP-5	SHERWIN WILLIAMS SW 6674 JONQUIL
IP-6	SHERWIN WILLIAMS SW 6516 DOWN POUR
IP-7	SHERWIN WILLIAMS SW 6360 FOLKSY GOLD
IP-8	SHERWIN WILLIAMS SW 6431 LEAP FROG
IP-9	(NOT USED)
IP-10	SHERWIN WILLIAMS SW 6716 DANCING GREEN
IP-11	SHERWIN WILLIAMS SW 6228 REFUGE
IP-12	SHERWIN WILLIAMS SW 6206 OYSTER BAY
IP-13	SHERWIN WILLIAMS SW 6321 RED BAY
IP-14	SHERWIN WILLIAMS SW 7069 IRON ORE
IP-15	SHERWIN WILLIAMS SW 6116 TATAMI TAN
IP-16	(NOT USED)
IP-17	SHERWIN WILLIAMS SW 6307 FINE WINE
IP-18	SHERWIN WILLIAMS SW 6340 BAKED CLAY
IP-19	SHERWIN WILLIAMS SW 66R38 SAFETY RED
IP-20	SHERWIN WILLIAMS ALKYD PRIMER
IP-21	SHERWIN WILLIAMS SW 6254 LAZY GRAY
IP-22	SHERWIN WILLIAMS SW 7006 EXTRA WHITE
IP-23	(NOT USED)
IP-24	SHERWIN WILLIAMS SW 0011 CREWEL TAN
IP-25	(NOT USED)
IP-26	(NOT USED)
IP-27	SHERWIN WILLIAMS SW 6515 LEISURE BLUE
IP-28	SHERWIN WILLIAMS SW 6527 BLISSFUL BLUE
IP-MA	MATCH EXISTING ADJACENT COLOR
IP-EX	EXISTING PAINT COLOR TO REMAIN
PL-	PLASTIC LAMINATE
PL-1	(NOT USED)
PL-2	(NOT USED)
PL-3	WILSONART ALUMASTEEL 6277 TYPE 418
PL-4	WILSONART #7939K-18 "BLOND [illegible]"
PL-5	WILSONART #7951K-18 "ASIAN SUN"
PL-6	(NOT USED)
PL-7	WILSONART [illegible]K-78 "NE[illegible]EAK"
PL-8	WILSONART #4[illegible]0 "SAFFRON TI[illegible]IS"
PL-9	WILSONART #491[illegible] "GILDED ME[illegible]"
PL-10	WILSONART #4588-[illegible] "KALAHARI [illegible]"
PL-11	WILSONART #7962K-[illegible] "[illegible]OE"
PL-12	C[illegible]LAST #K09859 "BRUSHED ALUMINUM" E.B.
PL-13	WILSONART #7941K-18 "T[illegible]O"
[illegible]	ACROVYN CHAMELEON WALL PROTECTION - # 410 "BRUSHED SILVER"
PL-MA	NEW PLASTIC LAMINATE TO MATCH EXISTING
PL-EX	EXISTING PLASTIC LAMINATE TO REMAIN
FRP-	FIBERGLASS REINFORCED PLASTIC
FRP-1	SEQUENTIA "STRUCTOGLAS FRFR" - "ALMOND" MARLITE "STANDARD FRP" - "IVORY" GLASTEEL "GLASLINER FRP" - "IVORY" CRANE COMPOSITES (KEMLITE) "FIRE-X GLASBORD"- "COLONIAL WHITE"
FRP-2	SEQUENTIA "STRUCTOGLAS FRFR" - "WHITE" MARLITE "STANDARD FRP" - "WHITE" GLASTEEL "GLASLINER FRP" - "BRIGHT WHITE" CRANE COMPOSITES (KEMLITE) "FIRE-X GLASBORD"- "WHITE"
FRP-3	SEQUENTIA "STRUCTOGLAS FRFR" - "GRAY" MARLITE "STANDARD FRP" - "LIGHT GRAY" GLASTEEL "GLASLINER FRP" - "LIGHT GRAY" CRANE COMPOSITES (KEMLITE) "FIRE-X GLASBORD"- "PEARL GRAY"
FRP-EX	EXISTING FRP PANELS TO REMAIN
FRP-MA	NEW FRP PANELS TO MATCH EXISTING

NOTE:
ALL GAS PIPING TO BE PAINTED SAFETY YELLOW

Code	Description
CW-	COOLER WALL/FREEZER PANEL FINISH
CW-A	COOLER WALL/FREEZER PANEL - EMBOSSED ALUMINUM FINISH
CW-S	COOLER WALL/FREEZER PANEL - STAINLESS STEEL FINISH
CW-W	COOLER WALL/FREEZER PANEL - WHITE FINISH
CW-EX	COOLER WALL/FREEZER PANEL - EXISTING TO REMAIN
	METAL FINISHES
SS-1	STAINLESS STEEL
SS-EX	EXISTING STAINLESS STEEL FINISH TO REMAIN
GL-1	GALVANIZED STEEL
	CERAMIC TILE
TP- FT-	CERAMIC & FLOOR TILE PATTERN - SEE CORRESPONDING DETAIL IN PUBLIX TILE PATTERN MANUAL AT http://corporate.publix.com/business/design-and-construction
TP-EX	EXISTING CERAMIC TILE TO REMAIN
TP-MA	NEW CERAMIC TILE TO MATCH EXISTING
	WALL BASE
VB-1	VINYL BASE- 6" COVED "JOHNSONITE #49 BEIGE" OR EQUAL
VB-2	VINYL BASE- 4" COVED (MEDIUM GRAY)
VB-3	VINYL BASE- 6" COVED (MEDIUM GRAY)
WB-1	WOOD BASE- 4" (MEDIUM GRAY)
MB-1	NEW 6" MMA BASE
SS-B	STAINLESS STEEL BASE- 6" COVED
NB-MA	NEW BASE TO MATCH EXISTING ADJACENT
	MISCELLANEOUS
TLP-1	ALL TOILET PARTITIONS TO BE: SCRANTON "L[illegible]N" OR GLO[illegible] "CREAM" OR MILLS/BRADLEY "LINEN" OR AMPC[illegible] "MOCHA"
WD-1	TONGUE AND GROOVE PLANKING -1/2" THICK BY [illegible] WIDE, V-JOINT LONGLEAF SOUTHERN PINE, S4S FINISH - M[illegible]WAX WOOD FINISH "GOLDEN [illegible]CAN 245"
WD-2	(NOT USED)
WC-EX	EXISTING WALL COVERING TO REMAIN
QZ-1	QUARTZ RESIN [illegible] CAMBRIA, DESERT [illegible]ION, CHER[illegible] ([illegible] THICK - MITRED EDGE)
AM-1	ACCENT MATERIAL PROVIDED BY PUBLIX, SEE PUBLIX REPRESENTATIVE FOR MORE INFORMATION
[illegible]	FROSTED GLASS DECORATIVE FILM - 3M FASARA GLASS FINISHES - [illegible]
PP-1	PAINTED PLYWOOD - SHERWIN WILLIAMS SW 6254 LAZY GRAY
WV-	SERVICE DEPARTMENT WALL VINYL ACCENT BAND (OF/OI) - SEE PUBLIX REPRESENTATIVE FOR MORE INFORMATION.
	WV-[illegible] WV-SF WV-PR WV-BK WV-DL WV-VE
CT-1	ARMSTRONG IMPERIAL STRIATIONS TEA TIME T3616 HERRINGBONE PATTER 12 " X 24"
[illegible]	WINDOW FILM- SOLYX SX-C373 ACID ETCH STRIPED HORIZONTAL BANDS

NOTES:
1. NOT ALL COLORS OR FINISHES MAY BE USED ON THIS PROTOTYPE
2. FOR FLOOR FINISHES, SEE SHEET A-1A.
3. INTERIOR PAINTS FOR SALES AREA WALL SURFACES ABOVE 8' ARE TO BE "FLAT FINISH"; ALL OTHER SURFACES TO BE SEMI-GLOSS SATIN FINISH.
4. APPLY BLOCK FILLER TO ALL MASONRY TO RECEIVE PAINT.
5. ALL SURFACES BEHIND CASES, WALK-IN COOLER, OR FREEZERS SHALL JUST RECEIVE PRIMER OR BLOCK FILLER. ALL EXPOSED SURFACES ABOVE THE CASES, WALK-IN COOLER, OR FREEZERS SHALL ALSO RECEIVE THE FINISH COAT OF PAINT.
6. IN RECEIVING/STORAGE, A LINE 2" WIDE OF SW B-66R38 SAFETY RED SHALL BE PAINTED AT A HEIGHT OF 12'-0" (TOP OF LINE) ON WALLS WHERE STORAGE OCCURS. ABOVE THIS LINE WILL BE STENCILED, IN 3" CAPITAL LETTERS, "NO STORAGE ABOVE THIS LINE."
7. PAINT ALL EXPOSED UTILITY DROPS SUCH AS PLUMBING LINES, REFRIGERATION LINES, ELECTRICAL CONDUIT, DUCTS AND COLUMNS TO MATCH ADJACENT WALL SURFACE. WHEN MORE THAN ONE COLOR IS USED ON WALL, MATCH COLOR CHANGES AT EXACT SAME HEIGHTS.

NOTE: SEE SHEET A8.15 FOR LAYOUT ACCESSORIES & MOUNTING HEIGHTS.

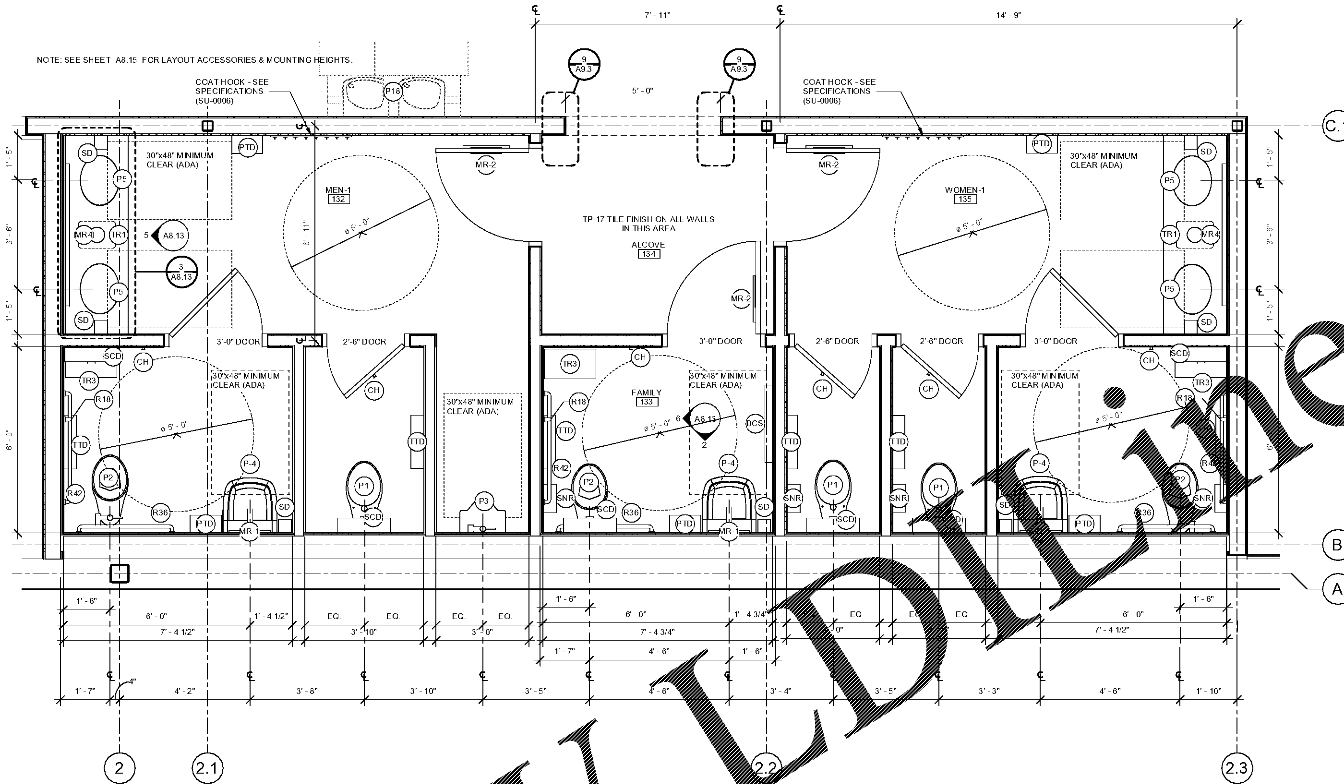

1 RESTROOMS ENLARGED PLAN
SCALE: 1/2" = 1'-0"

NOTE: SEE SHEET A8.15 FOR LAYOUT ACCESSORIES & MOUNTING HEIGHTS.

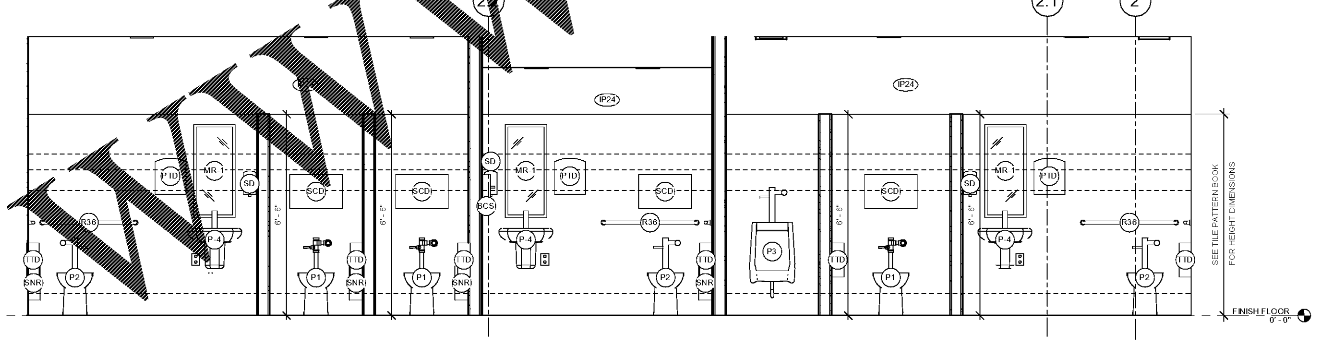

NOTE: SEE SHEET A8.15 FOR LAYOUT ACCESSORIES & MOUNTING HEIGHTS.

2 CUSTOMER RESTROOM - FRONT
SCALE: 1/2" = 1'-0"

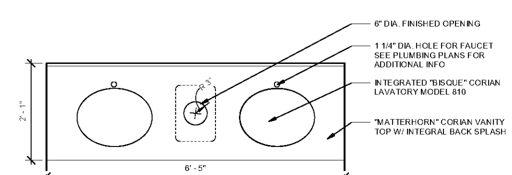

3 RESTROOMS - CUSTOMER VANITY - TOP
SCALE: 3/4" = 1'-0"

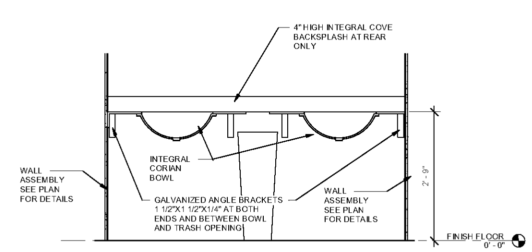

4 CUSTOMER VANITY - SECTION
SCALE: 3/4" = 1'-0"

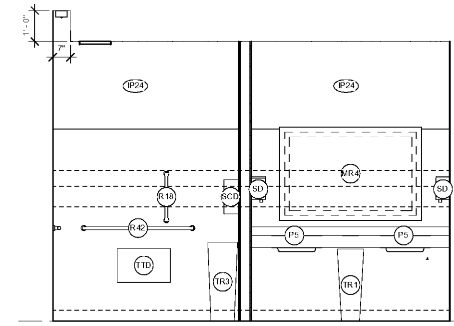

5 CUSTOMER RESTROOM - VANITY
SCALE: 1/2" = 1'-0"

NOTE: SEE SHEET A8.15 FOR LAYOUT ACCESSORIES & MOUNTING HEIGHTS.

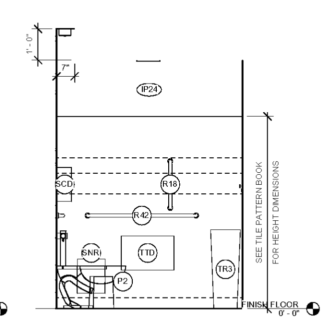

6 CUSTOMER RESTROOM - FAMILY
SCALE: 1/2" = 1'-0"

NOTE: SEE SHEET A8.15 FOR LAYOUT ACCESSORIES & MOUNTING HEIGHTS.

Publix SUPER MARKETS

CORPORATE OFFICES, FACILITIES DESIGN
BOX 407, LAKELAND, FL 33802
(863) 680-5295
PHYSICAL ADDRESS:
3300 PUBLIX CORPORATE PARKWAY,
LAKELAND, FL 33811-3311

PUBLIX FACILITIES DESIGN DEPARTMENT
DAVID [illegible]BEE, A[illegible]
ARCHITECT FL [illegible]
DAVID RUBIN
ARCHITECT FL REG. 9255[illegible] GA REG. 11[illegible]1 SC REG. 7477 AL REG. 6234 TN REG. 103497 [illegible] REG. 12432 VA REG. 0401017097
JOHN W. KITCHENS, PE
CIVIL/STRUCTURAL FL REG. 45277 GA REG. 020251 SC REG. 16340 AL REG. 20382 TN REG. 101507
PAUL C. HARMAN, PE
STRUCTURAL FL REG. 51959 GA REG. 27740 SC REG. 21754 AL REG. 24905 TN REG. 107882 NC REG. 39673 VA REG. 0402055022
JOHN J. CARAMALIS, PE
MECHANICAL FL REG. 43889 GA REG. 021246 SC REG. 16521 AL REG. 20581 TN REG. 108507 VA REG. 0402055478
ANTHONY CLEMENTI, PE
MECHANICAL FL REG. 54781 GA REG. 31882 SC REG. 25591 AL REG. 28469 TN REG. 111382 NC REG. 039664 VA REG. 0402056137
RAYMOND J. SIRIANNI, PE
ELECTRICAL FL REG. 54085 GA REG. 025636 SC REG. 19743 AL REG. 23065 TN REG. 108038 NC REG. 039963 VA REG. 0402055379

© COPYRIGHT 2018
PUBLIX SUPER MARKETS, INC.

THESE CONSTRUCTION DOCUMENTS ARE THE PROPERTY OF PUBLIX SUPER MARKETS, INC. AND ARE NOT TO BE COPIED OR REUSED FOR ANY SPECIFIC BUILDING WITHOUT WRITTEN PERMISSION. THESE DRAWINGS SHALL NOT BE DUPLICATED WITHOUT PRIOR WRITTEN PERMISSION OF PUBLIX SUPER MARKETS, INC.

THE DESIGN INDICATED IN THESE CONSTRUCTION DOCUMENTS DOES; TO THE BEST OF MY KNOWLEDGE, INFORMATION, AND BELIEF; COMPLY WITH THE APPLICABLE MINIMUM BUILDING CODES

PLOT DATE:
August, 21 2018

No.	Description	Date

STORE NUMBER
1687
Tattersall Park

US 280 & Highway 19
Hoover
Shelby Co., AL

48.10
V0514-2018
SIENNA LITE

RESTROOMS AND ADA DETAILS

As indicated

A8.13

PERMIT SET DATE 8/29/2018 11:13:54 AM

Order Plans @ WWW.LDILine.com