System No. HW-D-0489

February 11, 2008

Assembly Rating — 1 Hr

Nominal Joint Width — 2 in.

Class II Movement Capabilities — 100% Compression and Extension

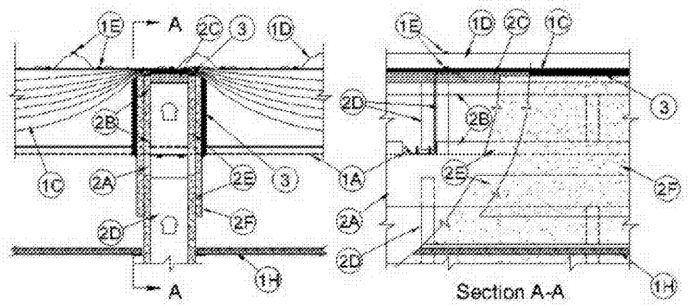

1. **Roof-Ceiling Assembly** — The fire rated roof-ceiling assembly shall be constructed of the materials and in the manner described in the individual P200 or P500 Series **Roof-Ceiling Designs** in the UL Fire Resistance Directory and shall include the following construction features:

A. **Purlin** — Min 16 ga coated steel. Max spacing as specified in the individual **Roof-Ceiling Design**.

B. **Lateral Bracing** — (Not Shown) - As required.

C. **Batts and Blankets* - Insulation** — Any faced compressible glass-fiber blanket insulation having a min 6 in. (152 mm) thickness before compression and a min density of 0.6 pcf (9.6

kg/m^3). Insulation draped over purlins prior to installation of panel clips (Item 1F) and/or metal roof deck panels (Item 1D). Side edges of the batts shall be butted or overlapped a max of 3 in. (76 mm).

See **Batts and Blankets** (BZJZ) category in the UL Fire Resistance Directory or **Batts and Blankets** (BKNV) category in the UL Building Materials Directory for names of manufacturers.

D. **Metal Roof Deck Panels*** — Min 26 ga coated steel. Panels continuous over two or more spans. Roof panel end laps, if required, centered over purlins with min 3 in. (76 mm) panel overlap as specified in the individual **Roof-Ceiling Design**. A line of tube sealant or tape sealant may be used at panel end and side laps.

See **Metal Roof Deck Panels** (TJPV) category in the UL Roofing Materials and Systems Directory for names of manufacturers.

E. **Fasteners** — Fasteners used for panel-to-purlin and panel-to-panel connections to be self-tapping, hex-head, plated steel or stainless steel screws with either an integral or a separate steel washer fitted with a compressible sealing washer. Fastener type, length, pilot hole diam and spacing to be as specified in the individual **Roof-Ceiling Design**.

F. **Roof Deck Fasteners* - Panel Clips** — (Not Shown) - Panel clips used for panel-to-purlin connections to be secured to purlin through insulation as specified in the individual **Roof-Ceiling Design**.

See **Roof Deck Fasteners** (TLSX) category in the UL Roofing Materials and Systems Directory for names of manufacturers.

G. **Thermal Spacer Blocks** — (Not Shown) - Expanded polystyrene strips cut to fit between panel clips (Item 1F) as specified in the individual **Roof-Ceiling Design**. Thermal spacer blocks, when used, are to be installed between insulation (Item 1C) and metal roof deck panels (Item 1D) over purlins.

H. **Ceiling Membrane — The Steel Framing Members*, Acoustical Material*, Gypsum Board*** and other ceiling membrane components shall be as specified in the individual **Roof-Ceiling Design.**

2. **Wall Assembly** — The 1 h fire-rated gypsum board/steel stud wall assembly shall be constructed of the materials and in the manner specified in the individual U400 or V400 Series **Wall and Partition Design** in the UL Fire Resistance Directory and shall include the following construction features:

A. **Ceiling Deflection Channel** — U-shaped channel formed from min 16 ga steel sized to accommodate steel studs (Item 2D) and provided with 5 in. (127 mm) flanges. Deflection channel installed perpendicular to purlins and secured to bottom flange of purlins with min No. 14 self-tapping, hex-head, plated steel or stainless steel screws.

B. **Steel Floor and Ceiling Runners** — Floor runner of the wall assembly and the floor and ceiling runners of the cripple wall above the wall assembly shall consist of min 1-1/4 in. (32 mm) deep min 25 ga galv steel channels sized to accommodate steel studs (Item 2D). Floor runner of cripple wall aligned with and screw-attached to top of ceiling deflection channel. Ceiling runner of cripple wall installed to compress insulation (Item 1C) to min thickness of 3/8 in. (10 mm) by wedging lengths of stud (Item 2D) between the runners. Steel studs of cripple wall attached to each side of purlin web and to floor and ceiling runners with steel screws.

C. **Batts and Blankets* - Packing Material** — Unfaced compressible mineral wool batt insulation having a nom 2 in. (51 mm) thickness before compression and a nom density of 4 pcf (64 kg/m^3). Strips of nom 2 in. (51 mm) thick batt cut to width of cripple wall ceiling runner and compressed min 50 percent in thickness between cripple wall ceiling runner and insulation (Item 1C). Compression of mineral wool batt packing material to result in compression of insulation (Item 1C) to nominal 3/8 in. (10 mm) thickness.

See **Batts and Blankets** (BZJZ) category in the UL Fire Resistance Directory or Batts and Blankets (BKNV)category in the UL Building Materials Directory for names of manufacturers.

D. **Studs** — Steel studs to be min 3-1/2 in. (89 mm) wide. Studs cut max 2 in. (51 mm) less in length than assembly height beneath purlins with bottom nesting in and resting on the floor runner and with top nesting in ceiling deflection channel without attachment. Stud spacing not to exceed 24 in. (610 mm) O.C. Studs of cripple wall cut to lengths as required to compress packing material (Item 2C) and insulation (Item 1C) to min thicknesses of 1 in. (25 mm) and 3/8 in. (10 mm), respectively. Studs spaced max 24 in. (610 mm) OC.

E. **Gypsum Board*** — Min 5/8 in. (16 mm) thick gypsum board sheets installed on each side of wall. Wall to be constructed as specified in the individual U400 or V400 Series Design in the UL Fire Resistance Directory except that a max 2 in. wide gap shall be maintained between the gypsum board of the wall assembly below the purlin and the gypsum board of the cripple wall. Top edge of gypsum board of wall assembly to be max 2 in. (51 mm) below top of ceiling deflection channel. Bottom edge of gypsum board of cripple wall to be flush with top of ceiling deflection channel. Screws securing gypsum board to steel studs of wall assembly to be located 2-1/4 in. to 2-1/2 in. (57 to 64 mm) below flange of ceiling deflection channel. Screws securing gypsum board of cripple wall to be driven into studs and runners of cripple wall. No screws are to be driven into flanges of ceiling deflection channel.

F. **Gypsum Board*** — Min 5/8 in. (16 mm) thick "rip strip" of gypsum board installed to cover first layer of gypsum board on cripple wall and to lap min 3 in. (76 mm) onto gypsum board of wall assembly on each side of wall. The "rip strip" of gypsum board is to be the same material

used for the wall assembly and is to be secured to the studs and runners of the cripple wall. No screws are to be driven into flanges of ceiling deflection channel. Joints of "rip strip" to be offset from joints of gypsum board on wall assembly.

Max separation between top of wall assembly gypsum board and bottom of cripple wall gypsum board (at time of installation of joint system) is 2 in. (51 mm). The joint system is designed to accommodate a max 100 percent compression or extension from its installed width.

3. **Fill, Void or Cavity Material* — Caulk** — Min 5/8 in. (16 mm) thickness of fill material installed to fill any gap between top of cripple wall gypsum board and insulation (Item 1C) on each side of the wall. Additional caulk installed to fill annular space between purlin and gypsum board "rip strip" (Item 2F) on both sides of wall. Additional nom 1/2 in. (13 mm) diam bead of caulk to be applied around perimeter of purlin at its interface with the "rip strip" on each side of the wall.

3M COMPANY 3M FIRE PROTECTION PRODUCTS — CP 25WB+ caulk

*** Indicates such products shall bear the UL or cUL Certification Mark for jurisdictions employing the UL or cUL Certification (such as Canada), respectively.**

System No. HW-D-0098
XHBN.HW-D-0098
Joint Systems

Page Bottom

Design/System/Construction/Assembly Usage Disclaimer

- Authorities Having Jurisdiction should be consulted in all cases as to the particular requirements covering the installation and use of UL Certified products, equipment, system, devices, and materials.
- Authorities Having Jurisdiction should be consulted before construction.
- Fire resistance assemblies and products are developed by the design submitter and have been investigated by UL for compliance with applicable requirements. The published information cannot always address every construction nuance encountered in the field.
- When field issues arise, it is recommended the first contact for assistance be the technical service staff provided by the product manufacturer noted for the design. Users of fire resistance assemblies are advised to consult the general Guide Information for each product category and each group of assemblies. The Guide Information includes specifics concerning alternate materials and alternate methods of construction.
- Only products which bear UL's Mark are considered Certified.

XHBN - Joint Systems

See General Information for Joint Systems

System No. HW-D-0098

June 04, 2010

Assembly Rating — 1 and 2 Hr (See Item 4)

Nominal Joint Width - 1 in.

L Rating At Ambient — Less Than 1 CFM/Lin Ft (See Item 4)

L Rating At 400°F — Less Than 1 CFM/Lin Ft (See Item 4)

Class II and III Movement Capabilities - 12.5% Compression or Extension

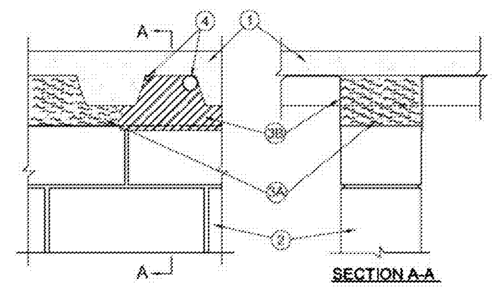

1. **Floor Assembly** — The fire rated fluted steel unit/concrete floor assembly shall be constructed of the materials and in a manner described in the individual D700 or D900 Floor-Ceiling Design in the UL Fire Resistance Directory and shall include the following construction features:

A. **Steel Floor and Form Units*** — Max 3 in. (76 mm) deep galv steel fluted floor units.

B. **Concrete** — Min 2-1/2 in. (64 mm) thick reinforced concrete as measured from top plane of the floor units.

C. **Spray-Applied Fire Resistive Materials*** — (Optional)--(Not Shown)--Prior to the installation of the forming material and fill, void or cavity material (Items 3A, 3B) the steel floor units may be sprayed with a min 5/16 in. (8 mm) to max 1-3/4 in. (44 mm) thickness of fire resistive material.

W R GRACE & CO - CONN — Type MK-6-HY

ISOLATEK INTERNATIONAL — Type 300

1A. **Roof Assembly** — (Not Shown) -- As an alternate to the floor assembly, a fire rated fluted steel deck roof assembly may be used. The roof assembly shall be constructed of the materials and in the manner described in the individual P900 Series Roof-Ceiling Design in the UL Fire Resistance Directory. The hourly rating of the roof assembly shall be equal to or greater than the hourly rating of the wall assembly. The roof assembly shall include the following construction features:

A. **Steel Roof Deck** — Max 3 in. (76 mm) deep galv steel fluted roof deck.

B. **Roof Insulation** — Min 2-1/4 in. (57 mm) thick poured insulating concrete as measured from the top plane of the floor units.

1B. **Roof Assembly** — As an alternate to Items 1 and 1A, a fire rated protected fluted steel deck roof assembly may be used. The roof assembly shall be constructed of the materials and in the manner described in the individual P700 Series Roof-Ceiling Design in the UL Fire Resistance Directory. The hourly rating of the roof assembly shall be equal to or greater than the hourly rating of the wall assembly. The roof assembly shall include the following construction features:

A. **Steel Roof Deck** — Max 3 in. (76 mm) deep galv steel fluted roof deck.

B. **Spray-Applied Fire Resistive Materials*** — (Not Shown)—Prior to the installation of the steel ceiling runners, Forming Material and Fill, Void or Cavity Material (Items 2A, 3A, 3B), the roof assembly shall be sprayed with the type and thickness of fire resistive material indicated in the individual P700 Series design.

2. **Wall Assembly** — Min 6 in. (152 mm) thick steel reinforced lightweight or normal weight (100-150 pcf or 1600-2400 kg/m^3) structural concrete. Wall may also be constructed of any UL Classified **Concrete Blocks***.

See Concrete Blocks (CAZT) category in the Fire Resistance Directory for names of manufacturers.

3. Joint System — Max separation between bottom of floor or roof and top of wall at time of installation of joint system is 1 in. (25 mm). The joint system is designed to accommodate a max 12.5 percent compression or extension from its installed width. The joint system shall consist of the following:

A. **Forming Material** — Nom 4 pcf (64 kg/m^3) mineral wool batt insulation compressed and firmly packed to completely fill the flutes and the gap between the top of the wall and bottom of the floor or roof as a permanent form. Batt insulation cut to the shape of the fluted steel deck, approx 33 percent larger than the flutes. Pieces compressed and installed vertically into the flutes above the top of the wall. Additional pieces of batt insulation, min 6 in. wide, installed edge-first into joint opening between bottom of fluted steel deck and top of wall, parallel with joint direction, such that batt sections are compressed min 33 percent in thickness. Compressed batt sections are flush with both surfaces of wall. Adjoining lengths of batt to be tightly butted with butted seams spaced min 48 in. (1.22 m) apart along the length of the joint.

ROCK WOOL MANUFACTURING CO — Delta Board

A1. **Forming Material*—Plugs** — (Optional-Not Shown) Performed mineral wool plugs, formed to the shape of the fluted floor units, friction fit to completely fill the flutes above the ceiling runner. The plugs shall be flush with both wall surfaces. Additional forming material, described in Item 3A, to be used in conjunction with the plugs to fill the gap between the top of the wall and the bottom of the steel floor units.

HILTI CONSTRUCTION CHEMICALS, DIV OF HILTI INC — CP777 Speed Plugs

B. **Fill, Void or Cavity Material*** — Min 1/8 in. (3.2 mm) wet thickness (min 1/16 in. or 1.6mm dry thickness) of fill material sprayed or troweled on each side of the wall to completely cover mineral wool forming material and to overlap a min of 1/2 in. (13 mm) onto wall and steel deck on both sides of wall. When spray-applied fire resistive material* is applied to the steel deck, the fill material is to overlap the wall a min of 1/2 in. (14 mm) and to overlap the spray-applied fire resistive material a min of 2 in. (51 mm) on both sides of wall. When through-penetrants (Item 4) are installed within flute, the fill material shall overlap a min 1/2 in. (13 mm) onto the periphery of each penetrant, on both sides of wall.

HILTI CONSTRUCTION CHEMICALS, DIV OF HILTI INC — CP672 Firestop Spray or CFS-SP WB Firestop Joint Spray

4. **Through-Penetrants** — Max of two penetrants may be installed parallel with and within the flutes of the steel floor or roof deck. The annular space between penetrants and steel deck or spray-applied fire resistive material on steel deck shall be min 0 in. (point contact) and the annular space between penetrants within the flute shall be min 2 in. (51 mm). Penetrants to be rigidly supported on both sides of the floor or wall assembly. The following types and sizes of penetrants may be used:

A. **Polyvinyl Chloride (PVC) Pipe** — Nom 1-1/2 in. (38 mm) diam (or smaller) Schedule 40 solid core PVC pipe for use in closed (process or supply) piping systems.

B. **Rigid Nonmetallic Conduit+** — Nom 1-1/2 in. (38 mm) diam (or smaller) Schedule 40 PVC conduit installed in accordance with the National Electrical Code (NFPA 70).

C. **Steel Conduit or Tubing** — Nom 1/2 in. (13 mm) diam rigid steel conduit or steel electrical metallic tubing (EMT) installed in accordance with the National Electrical Code (NFPA No. 70).

When Through-Penetrant(s) installed in flute of steel deck, the hourly rating of the joint system is 1 hr.

When Through-Penetrant(s) installed in flute of steel deck, L Ratings do not apply.

*** Indicates such products shall bear the UL or cUL Certification Mark for jurisdictions employing the UL or cUL Certification (such as Canada), respectively.**

Last Updated on 2010-06-04

Questions? Print this page Terms of Use Page Top

© 2015 UL LLC

The appearance of a company's name or product in this database does not in itself assure that products so identified have been manufactured under UL's Follow-Up Service. Only those products bearing the UL Mark should be considered to be Certified and covered under UL's Follow-Up Service. Always look for the Mark on the product.

UL permits the reproduction of the material contained in the Online Certification Directory subject to the following conditions: 1. The Guide Information, Assemblies, Constructions, Designs, Systems, and/or Certifications (files) must be presented in their entirety and in a non-misleading manner, without any manipulation of the data (or drawings). 2. The statement "Reprinted from the Online Certifications Directory with permission from UL" must appear adjacent to the extracted material. In addition, the reprinted material must include a copyright notice in the following format: "© 2015 UL LLC".

Design No. U905
BXUV.U905
Fire Resistance Ratings - ANSI/UL 263

Page Bottom

Design/System/Construction/Assembly Usage Disclaimer

- Authorities Having Jurisdiction should be consulted in all cases as to the particular requirements covering the installation and use of UL Certified products, equipment, system, devices, and materials.
- Authorities Having Jurisdiction should be consulted before construction.
- Fire resistance assemblies and products are developed by the design submitter and have been investigated by UL for compliance with applicable requirements. The published information cannot always address every construction nuance encountered in the field.
- When field issues arise, it is recommended the first contact for assistance be the technical service staff provided by the product manufacturer noted for the design. Users of fire resistance assemblies are advised to consult the general Guide Information for each product category and each group of assemblies. The Guide Information includes specifics concerning alternate materials and alternate methods of construction.
- Only products which bear UL's Mark are considered Certified.

BXUV - Fire Resistance Ratings - ANSI/UL 263

BXUV7 - Fire Resistance Ratings - CAN/ULC-S101 Certified for Canada

See General Information for Fire-resistance Ratings - ANSI/UL 263

See General Information for Fire Resistance Ratings - CAN/ULC-S101 Certified for Canada

Design No. U905

March 11, 2016

Bearing Wall Rating — 2 HR.

Nonbearing Wall Rating — 2 HR

This design was evaluated using a load design method other than the Limit States Design Method (e.g., Working Stress Design Method). For jurisdictions employing the Limit States Design Method, such as Canada, a load restriction factor shall be used — See Guide BXUV or BXUV7

*** Indicates such products shall bear the UL or cUL Certification Mark for jurisdictions employing the UL or cUL Certification (such as Canada), respectively.**

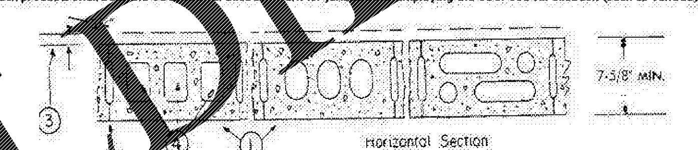

1. **Concrete Blocks*** — Various designs. Classification D-2 (2 hr).

See **Concrete Blocks** category for list of eligible manufacturers.

2. **Mortar** — Blocks laid in full bed of mortar, nom. 3/8 in. thick, of not less than 2-1/4 and not more than 3-1/2 parts of clean sharp sand to 1 part Portland cement (proportioned by volume) and not more than 50 percent hydrated lime (by cement volume). Vertical joints staggered.

3. **Portland Cement Stucco or Gypsum Plaster** — Add 1/2 hr to classification if used. Where combustible members are framed in wall, plaster or stucco must be applied on the face opposite framing to achieve a max. Classification of 1-1/2 hr. Attached to concrete blocks (Item 1).

4. **Loose Masonry Fill** — If all core spaces are filled with loose dry expanded slag, expanded clay or shale (Rotary Kiln Process), water repellant vermiculite masonry fill insulation, or silicone treated perlite loose fill insulation add 2 hr to classification.

5. **Foamed Plastic*** — (Optional-Not Shown) — 1-1/2 in. thick max, 4 ft wide sheathing attached to concrete blocks (Item 1).

ATLAS ROOFING CORP — "EnergyShield Pro Wall Insulation" and "EnergyShield Pro 2 Wall Insulation"

CARLISLE COATINGS & WATERPROOFING INC — Type R2+ Sheath

FIRESTONE BUILDING PRODUCTS CO L L C — "Enverge™ CI Foil Exterior Wall Insulation" and "Enverge™ CI Glass Exterior Wall Insulation"

HUNTER PANELS — Types Xci-Class A, Xci 286

RMAX OPERATING L L C — "TSX-8500", "TSX-8510", "Thermasheath-XP", "ECOMAXci", "Thermasheath-3", "Durasheath-3"

THE DOW CHEMICAL CO — Types Thermax Sheathing, Thermax Light Duty Insulation, Thermax Heavy Duty Insulation, Thermax Metal Building Board, Thermax White Finish Insulation, Thermax ci Exterior Insulation, Thermax XARMOR ci Exterior Insulation, Thermax IH Insulation, Thermax Plus Liner Panel, Thermax Heavy Duty Plus (HDP) and TUFF-R™ ci Insulation

5A. **Building Units** — As an alternate to Items 5, min. 1-in thick polyisocyanurate composite foamed plastic insulation boards, nom. 48 by 48 or 96 in.

RMAX OPERATING L L C — "Thermasheath-SI", "ECOBASEci", "ThermaBase-CI"

*** Indicates such products shall bear the UL or cUL Certification Mark for jurisdictions employing the UL or cUL Certification (such as Canada), respectively.**

Last Updated on 2016-03-11

Questions? Print this page Terms of Use Page Top

© 2017 UL LLC

The appearance of a company's name or product in this database does not in itself assure that products so identified have been manufactured under UL's Follow-Up Service. Only those products bearing the UL Mark should be considered to be Certified and covered under UL's Follow-Up Service. Always look for the Mark on the product.

UL permits the reproduction of the material contained in the Online Certification Directory subject to the following conditions: 1. The Guide Information, Assemblies, Constructions, Designs, Systems, and/or Certifications (files) must be presented in their entirety and in a non-misleading manner, without any manipulation of the data (or drawings). 2. The statement "Reprinted from the Online Certifications Directory with permission from UL" must appear adjacent to the extracted material. In addition, the reprinted material must include a copyright notice in the following format: "© 2017 UL LLC".

Breaux & Associates
ARCHITECTS
5935 Shiloh Road East, Suite 200
Alpharetta, GA 30005 | (678) 585-4508

STATE OF GEORGIA
DOUGLAS P. BREAUX
CERTIFICATE NO. 013205
REGISTERED ARCHITECT
08/16/2018

NO	DESCRIPTION	DATE

PAULDING COLLEGE & CAREER ACADEMY
4555 DALLAS ACWORTH HWY
DALLAS, GA 30132
(FACILITY CODE: 710-3052)

PAULDING COUNTY SCHOOLS

UL DETAILS

DATE 08/08/2018

PROJECT NO. 17129

G0.2

8/16/2018 9:53:48 AM

Order Plans @ www.LDILine.com