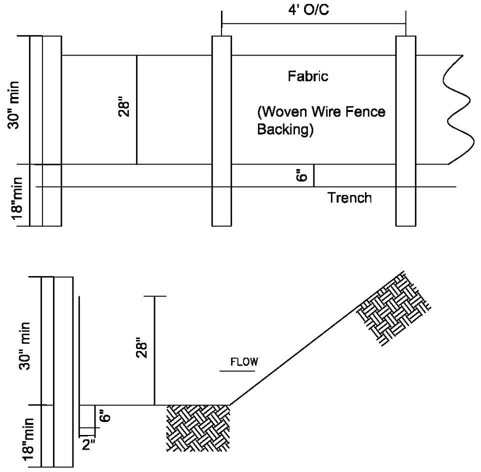

SILT FENCE

THE MANUFACTURER SHALL HAVE EITHER AN APPROVED COLOR MARK YARN IN THE FABRIC OR LABEL THE FABRICATED SILT FENCE WITH BOTH THE MANUFACTURER AND FABRIC NAME EVERY 100 FEET.

THE TEMPORARY SILT FENCE SHALL BE INSTALLED ACCORDING TO THIS SPECIFICATION, AS SHOWN ON THE PLANS OR AS DIRECTED BY THE ENGINEER. FOR INSTALLATION OF THE FABRIC, SEE DETAIL. POST INSTALLATION SHALL START AT THE CENTER OF THE LOW POINT (IF PPLICABLE) WITH THE REMAINING POSTS SPACED 4 FEET APART FOR TYPE C SILT FENCE. ONLY STEEL POST SHALL BE USED WITH TYPE C SILT FENCE. POSTS SHALL BE 4' IN LENGTH, 1.3 LBS/ FT.
ALONG STREAM BUFFERS AND OTHER SENSITIVE AREAS, TWO ROWS OF TYPE C SILT FENCE OR ONE ROW OF TYPE C SILT FENCE BACKED BY HAYBALES SHALL BE USED.

MAINTENANCE
SEDIMENT SHALL BE REMOVED ONCE IT HAS ACCUMULATED TO ONE-HALF THE ORIGINAL HEIGHT OF THE BARRIER. FILTER FABRIC SHALL BE REPLACED WHENEVER IT HAS DETERIORATED TO SUCH AN EXTENT THAT THE EFFECTIVENESS OF THE FABRIC IS REDUCED (APPROXIMATELY SIX MONTHS). TEMPORARY SEDIMENT BARRIERS SHALL REMAIN IN PLACE UNTIL DISTURBED AREAS HAVE BEEN PERMANENTLY STABILIZED. ALL SEDIMENT ACCUMULATED AT THE BARRIER SHALL BE REMOVED AND PROPERLY DISPOSED OF BEFORE THE BARRIER IS REMOVED.

Sd1-C TYPE C SILT FENCE

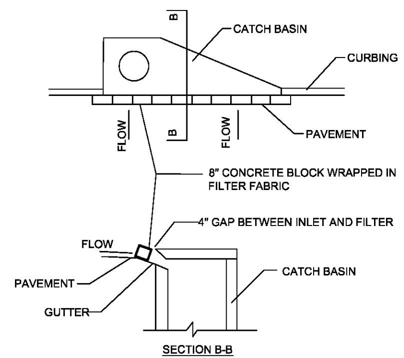

CURB INLET PROTECTION

ONCE PAVEMENT HAS BEEN INSTALLED, A CURB INLET FILTER SHALL BE INSTALLED ON INLETS RECEIVING RUNOFF FROM DISTURBED AREAS. THIS METHOD OF INLET PROTECTION SHALL BE REMOVED IF A SAFETY HAZARD IS CREATED.

ONE METHOD OF CURB INLET PROTECTION USES "PIGS-IN-A-BALNKET": 8-INCH CONCRETE BLOCKS WRAPPED IN FILTER FABRIC. SEE DETAIL. ANOTHER METHOD USES GRAVEL BAGS CONSTRUCTED BY WRAPING DOT #57 STONE WIHT FILTER FABRIC, WIRE, PLASTIC MESH, OR EQUIVALENT MATERIAL.
A GAP OF APPROXIMATELY 4 INCHES SHALL BE LEFT BETWEEN THE INLET FILTER AND THE INLET TO ALLOW FOR OVERFLOW AND PREVENT HAZARDOUS PONDING IN THE ROADWAY. PROPER INSTALLATION AND MAINTENANCE ARE CRUCIAL TO AVOID PONDING IN THE ROADWAY, RESULTING IN A HAZARDOUS CONDITION.

Sd2-P CURB INLET PROTECTION

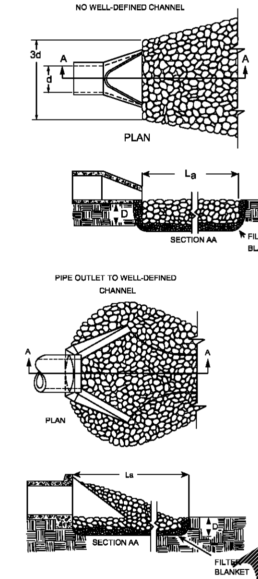

DETAILS MODIFIED FROM VA SWCC

NOTES ON DETAILS
1. L_a IS THE LENGTH OF THE RIPRAP APRON.
2. D = 1.5 TIMES THE MAXIMUM STONE DIAMETER BUT NOT LESS THAN 6".
3. IN A WELL-DEFINED CHANNEL EXTEND THE APRON UP THE CHANNEL BANKS TO AN ELEVATION OF 6" ABOVE THE MAXIMUM TAILWATER DEPTH OF TO THE TOP OF THE BANK, WHICHEVER IS LESS.
4. A FILTER BLANKET OR FILTER FABRIC SHOULD BE INSTALLED BETWEEN THE RIPRAP AND SOIL FOUNDATION.

APRON LENGTH AND THICKNESS
THE APRON LENGTH AND d_{50}, STONE MEDIAN SIZE, SHALL BE DETERMINED FROM THE CURVES ACCORDING TO THE TAILWATER CONDITIONS:
MINIMUM TAILWATER- USE FIG. 6-24.1
MAXIMUM TAILWATER- USE FIGURE 6-24.2
MAXIMUM STONE SIZE= 1.5 x d_{50}
APRON THICKNESS= 1.5 x dmax

CONSTRUCTION SPECIFICATIONS
1. ENSURE THAT THE SUBGRADE FOR THE FILTER AND RIPRAP FOLLOWS THE REQUIRED LINES AND GRADES SHOWN IN THE PLAN. COMPACT ANY FILL REQUIRED IN THE SUBGRADE TO THE DENSITY OF THE SURROUNDING UNDISTURBED MATERIAL. LOW AREAS IN THE SUBGRADE ON UNDISTURBED SOIL MAY ALSO BE FILLED BY INCREASING THE RIPRAP THICKNESS.
2. THE RIPRAP AND GRAVEL FILTER MUST CONFORM TO THE SPECIFIED GRADING LIMITS SHOWN ON THE PLANS.
3. GEOTEXTILE MUST MEET DESIGN REQUIREMENTS AND BE PROPERLY PROTECTED FROM PUNCHING OR TEARING DURING INSTALLATION. REPAIR ANY DAMAGE BY REMOVING THE RIPRAP AND PLACING ANOTHER PIECE OF FILTER FABRIC OVER THE DAMAGED AREA. ALL CONNECTING JOINTS SHOULD OVERLAP A MINIMUM OF 1 FT. IF THE DAMAGE IS EXTENSIVE, REPLACE THE ENTIRE FILTER FABRIC.
4. RIPRAP MAY BE PLACED BY EQUIPMENT, BUT TAKE CARE TO AVOID DAMAGING THE FILTER FABRIC.
5. THE MINIMUM THICKNESS OF THE RIPRAP SHOULD BE 1.5 TIMES THE MAXIMUM STONE DIAMETER.
6. CONSTRUCT THE APRON ON ZERO GRADE WITH NO OVERFALL AT THE END. MAKE THE TOP OF THE RIPRAP AT THE DOWNSTREAM END LEVEL WITH THE RECEIVING AREA OR SLIGHTLY BELOW IT.
7. ENSURE THAT THE APRON IS PROPERLY ALIGNED WITH THE RECEIVING STREAM AND PREFERABLY STRAIGHT THROUGHOUT ITS LENGTH. IF A CURVE IS NEEDED TO FIT SITE CONDITIONS, PLACE IT IN THE UPPER SECTION OF THE APRON.
8. IMMEDIATELY AFTER CONSTRUCTION, STABILIZE ALL DISTURBED AREAS WITH VEGETATION.
9. STONE QUALITY - SELECT STONE FOR RIPRAP FROM FIELD STONE OR QUARRY STONE. THE STONE SHOULD BE HARD, ANGULAR, AND HIGHLY WEATHER-RESISTANT. THE SPECIFIC GRAVITY OF THE INDIVIDUAL STONES SHOULD BE AT LEAST 2.5.
10. FILTER - INSTALL A FILTER TO PREVENT SOIL MOVEMENT THROUGH THE OPENINGS IN THE RIPRAP. THE FILTER SHOULD CONSIST OF A GRADED GRAVEL LAYER OR A SYNTHETIC FILTER CLOTH. SEE APPENDIX C; P. C-1.

MAINTENANCE
INSPECT RIPRAP OUTLET STRUCTURES AFTER HEAVY RAINS TO SEE IF ANY EROSION AROUND OR BELOW THE RIPRAP HAS TAKEN PLACE OR IF STONES HAVE BEEN DISLODGED. IMMEDIATELY MAKE ALL NEEDED REPAIRS TO PREVENT FURTHER DAMAGE.

TO BE SHOWN ON THE EROSION AND SEDIMENT CONTROL PLAN

1. THE FLOW CHARACTERISTICS OF THE PIPE AT FULL FLOW INCLUDING PIPE DIAMETER, FLOW RATE (CFS), VELOCITY (FPS), AND TAILWATER CONDITION.

2. THE DIMENSIONS OF THE APRON INCLUDING LENGTH (La), WIDTH AT THE HEADWALL (W_1), DOWNSTREAM WIDTH (W_2), AVERAGE STONE DIAMETER (d_{50}), MAX STONE SIZE (dmax) AND STONE DEPTH (D) DESIGNED IN ACCORDANCE WITH FIGURES 6-24.1 AND 6- 24.2 IN GREEN BOOK.

St STORM DRAIN OUTLET PROTECTION

St CALCULATION
Q100=5.90CFS
Q25= 4.96CFS
V50=3.21FPS
La=12'
W1=3',W2=12'
d50=0.50'
D=1.50'

Rev	Date	Description

CONCEPT FOR
NEW FIRE STATION #9
4171 OLD DIXIE HIGHWAY
ATLANTA, GEORGIA 30354

CLAYTON COUNTY
FIRE DEPARTMENT

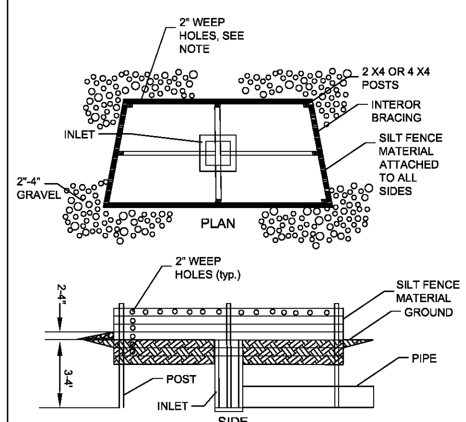

BAFFLE BOX

FOR INLETS RECEIVING RUNOFF WITH A HIGHER VOLUME OR VELOCITY, A BAFFLE BOX INLET SEDIMENT TRAP SHOULD BE USED. AS SHOWN IN FIGURE 6-21.2, THE BAFFLE BOX SHALL BE CONSTRUCTED OF 2" X 4" BOARDS SPACED A MAXIMUM OF 1 INCH APART OR OF PLYWOOD WITH WEEP HOLES 2 INCHES IN DIAMETER. THE WEEP HOLES SHALL BE PLACED APPROXIMATELY 6 INCHES ON CENTER VERTICALLY AND HORIZONTALLY. GRAVEL SHALL BE PLACED OUTSIDE THE BOX, ALL AROUND THE INLET, TO A DEPTH OF 2 TO 4 INCHES. THE ENTIRE BOX IS WRAPPED IN TYPE C FILTER FABRIC THAT SHALL BE ENTRENCHED 12 INCHES AND BACK FILLED.

Sd2-F BAFFLE BOX

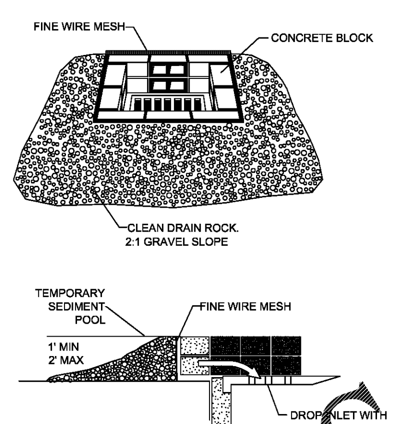

BLOCK AND GRAVEL DROP INLET PROTECTION

THIS METHOD OF INLET PROTECTION IS APPLICABLE WHERE HEAVY FLOWS ARE EXPECTED AND WHERE AN OVERFLOW CAPACITY IS NECESSARY TO PREVENT EXCESSIVE PONDING AROUND THE STRUCTURE. AS SHOWN IN DETAIL, ONE BLOCK IS PLACED ON EACH SIDE OF THE STRUCTURE ON ITS SIDE IN THE BOTTOM ROW TO ALLOW POOL DRAINAGE. THE FOUNDATION SHOULD BE EXCAVATED AT LEAST 2 INCHES BELOW THE CREST OF THE STORM DRAIN. THE BOTTOM ROW OF BLOCKS ARE PLACED AGAINST THE EDGE OF THE STORM DRAIN FOR LATER SUPPORT AND TO AVOID WASHOUTS WHEN OVERFLOW OCCURS. IF NEEDED, LATERAL SUPPORT MAY BE GIVEN TO SUBSEQUENT ROWS BY PLACING 2" X 4" WOOD STUDS THROUGH BLOCK OPENINGS. HARD WARE CLOTH OR COMPARABLE WIRE MESH WITH 1/2 INCH OPENINGS SHALL BE FITTED OVER ALL BLOCK OPENINGS TO HOLD GRAVEL IN PLACE. CLEAN GRAVEL SHOULD BE PLACED 2 INCHES BELOW THE TOP OF THE BLOCKS ON A 2:1 SLOPE OR FLATTER AND SMOOTHED TO AN EVEN GRADE. DOT #57 WASHED STONE IS RECOMMENDED.

Sd2-F BLOCK AND GRAVEL DROP INLET PROTECTION

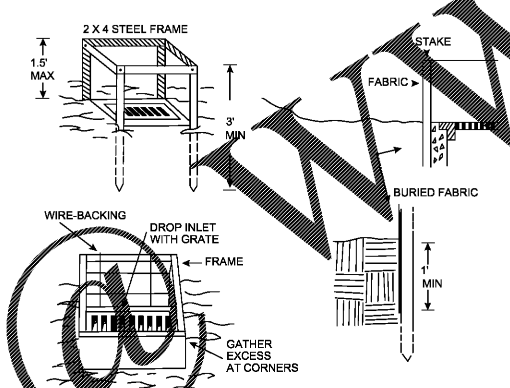

FILTER FABRIC WITH SUPPORTING FRAME

THIS METHOD OF INLET PROTECTION IS APPLICABLE WHERE THE INLET DRAINS A RELATIVELY FLAT AREA (SLOPE NO GREATER THAN 5 %) AND SHALL NOT APPLY TO INLETS RECEIVING CONCENTRATED FLOWS, SUCH AS IN STREET OR HIGHWAY MEDIANS. AS SHOWN IN DETAIL, TYPE C SILT FENCE SUPPORTED BY STEEL POSTS SHALL BE USED. THE STAKES SHALL BE SPACED EVENLY AROUND THE PERIMETER OF THE INLET A MAXIMUM OF 3 FEET APART, AND SECURELY DRIVEN IN TO THE GROUND, APPORIMATELY 18 INCHES DEEP. THE FABRIC SHALL BE ENTRENCHED 12 INCHES AND BACKFILLED WITH WITH CRUSHED STONE OR COMPACTED SOIL. FABRIC AND WIRE SHALL BE SECURELY FASTENED TO THE POSTS, AND FABRIC ENDS MUST BE OVERLAPPED A MINIMUN OF 18 INCHES OR WRAPPPED TOGETHER AROUND A POST TO PROVIDE A CONTINUOUS FABRIC BARRIER AROUND THE INLET.

Sd2-F FILTER FABRIC WITH SUPPORTING FRAME

DESIGN CRITERIA FOR ALL Sd2 APPLICATIONS

MANY SEDIMENT FILTERING DEVICES CAN BE DESIGNED TO SERVE AS TEMPORARY SEDIMENT TRAPS. SEDIMENT TRAPS MUST BE SELF-DRAINING UNLESS THEY ARE OTHERWISE PROTECTED IN AN APPROVED FASHION THAT WILL NOT PRESENT A SAFETY HAZARD. **THE AREA DRAINING TO THE INLET SEDIMENT TRAP SHALL BE NO GREATER THAN ONE ACRE.**

SCALE: 1" = 40'

IF RUNOFF MAY BYPASS THE PROTECTED INLET, A TEMPORARY DIKE SHOULD BE [redacted] STRUCTURE. ALSO A STONE FILTER RING MAY BE USED ON THE UP SLOPE SIDE OF THE INLET TO SLOW RUNOFF AND FILTER LARGER SOIL PARTICLES. REFER TO FR-STONE FILTER RING.

Sd2 INLET SEDIMENT BARRIER

MAINTENANCE FOR ALL Sd2 APPLICATIONS

ALL TRAPS SHALL BE INSPECTED DAILY AND AFTER EACH RAIN AND REPAIRS MADE AS NEEDED.
SEDIMENT SHALL BE REMOVED WHEN THE SEDIMENT HAS ACCUMULATED TO ONE-HALF THE HEIGHT OF THE TRAP. SEDIMENT SHALL BE REMOVED FROM CURB INLET PROTECTION IMMEDIATELY. FOR EXCAVATED INLET SEDIMENT TRAPS, SEDIMENT SHALL BE REMOVED WHEN ONE-HALF OF THE SEDIMENT STORAGE CAPACITY HAS BEEN LOST TO SEDIMENT ACCUMULATION. SOD INLET PROTECTION SHAL BE MAINTAINED AS SPECIFIED IN DS4-DISTURBED AREA STABLIZATION (WITH SODDING).

SEDIMENT SHALL NOT BE WASHED INTO THE INLET. IT SHALL BE REMOVED FROM THE SEDIMENT TRAP AND DISPOSED OF AND STABILIZED SO THAT IT WILL NOT ENTER THE INLET, AGAIN.
WHEN THE CONTRIBUTING DRAINAGE AREA HAS BEEN PERMANENTLY STABILIZED, ALL MATERIALS AND ANY SEDIMENT SHALL BE REMOVED, AND EITHER SALVAGED OR DISPOSED OF PROPERLY. THE DISTURBED AREA SHALL BE BROUGHT TO PROPER GRADE, THEN SMOOTHED AND COMPACTED. ALL DISTURBED AREAS AROUND THE INLET SHALL BE APPROPRIATELY STABILIZED.

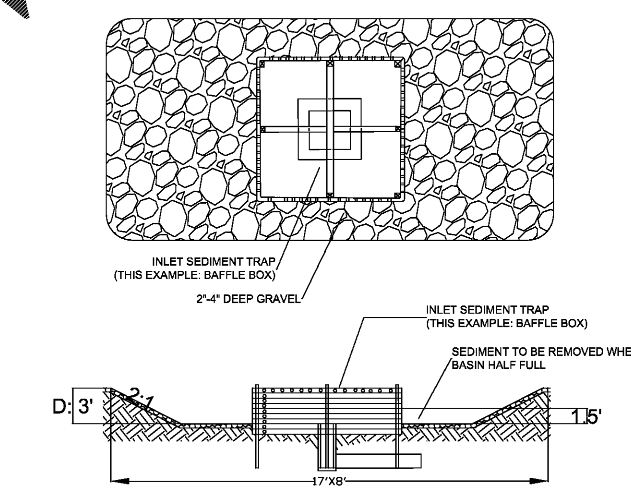

EXCAVATED INLET SEDIMENT TRAP

A BASIN MAY BE EXCAVATED AROUND THE INLET SEDIMENT TRAP TO PROVIDE ADDITIONAL SEDIMENT STORAGE. THE TRAP SHALL BE SIZED TO PROVIDE A MINIMUM STORAGE CAPACITY CALCULATED AT THE RATE OF 67 CUBIC YARDS PER ACRE OF DRAINAGE AREA. A MINIMUM DEPTH OF 1.5 FEET FOR SEDIMENT STORAGE SHOULD BE PROVIDED. SIDE SLOPES SHALL NOT BE STEEPER THAN 2:1.

THE AREA DRAINING TO THE INLET SEDIMENT TRAP SHALL BE NO GREATER THAN ONE ACRE.

TO BE SHOWN ON THE EROSION AND SEDIMENT CONTROL PLAN
FOR EXCAVATED INLET SEDIMENT TRAPS

1. **DRAINAGE AREA** = ____0.69___ AC
2. REQUIRED SEDIMENT STORAGE = 67 CY/AC * DRAINAGE AREA
REQUIRED SEDIMENT STORAGE = 67 CY/AC * __0.69___ AC
REQUIRED SEDIMENT STORAGE = __47.69____ CY = ___428____ CF
3. ASSUME EXCAVATION **DEPTH** (MINIMUM OF 1.5 FT.) = __3____ FT
4. ASSUME **SLOPE OF SIDES** (SHALL NOT BE STEEPER THAN 2:1) = _2_ :1
5. DETERMINE REQUIRED SURFACE AREA
SA_{MIN} = REQUIRED SEDIMENT STORAGE / EXCAVATION DEPTH
SA_{MIN} = __428____ CY / ___3___ FT
SA_{MIN} = __142.6____ SF
6. ASSUME SHAPE OF EXCAVATION AND DETERMINE DIMENSIONS.
(A RECTANGULAR SHAPE WITH 2:1 LENGTH TO WIDTH RATIO IS RECOMMENDED.)
SHAPE: ____RECTANGULAR___
DIMENSIONS: L = _17____ FT W = _8____ FT DIAMETER (IF APPLICABLE) = ______ FT
PROVIDE A DETAIL SHOWING THE DEPTH, LENGTH AND WIDTH, OR DIAMETER (IF APPLICABLE), AND SIDE SLOPES OF THE EXCAVATION.

ARCHITECTURE
INTERIOR DESIGN
LAND PLANNING

160 CLAIREMONT AVE., STE 120
DECATUR, GEORGIA
TEL: 470.355.8514
WWW.BOYEARCHITECTURE.COM

NOT RELEASED FOR CONSTRUCTION

DATE:	02-23-2018
PROJECT NO.:	2017-81
DRAWN BY:	EN
CHECKED BY:	MMU

EROSION
CONTROL
DETAILS 1

C-5D

Order Plans @ www.DILine.com