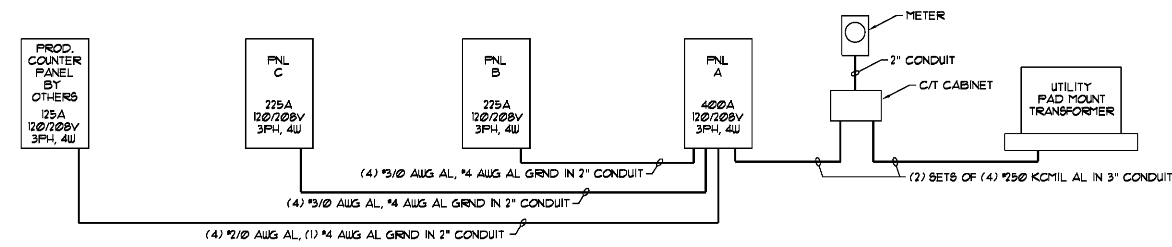

NOTES

1. ALL ISOLATED GROUND CONDUCTORS SHALL BE CONTINUED TO SERVICE ENTRANCE GROUND BAR.

(1) ELECTRICAL RISER DIAGRAM
SCALE: NOT TO SCALE

MANUFACTURER: SQUARE D | MLO OR MCB: MCB | PANEL: A
TYPE: NQ | FEED: BOTTOM | VOLTAGE: 120/208V, 3 PH, 4 WIRE
MOUNTING: SURFACE | CU / AL WIRE: CU | MAIN AMPS: 500 AMP
LOCATION: ELECTRICAL ROOM | AIC RATING: SEE RISER | FEEDER: 500 AMP | SPACES: 42

BREAKER OPTIONS:

NOTES: SEE RISER DIAGRAM FOR WIRE & CONDUIT SIZES

CKT NO.	LOAD	OPT	CODE	KVA	WIRE	BRKR	PHASE	BRKR	WIRE	KVA	CODE	OPT	LOAD	CKT NO.
1			H	6.70	4	3P	A	3P	6	5.40	H			2
3	RTU-1		H	6.70	4		B		6	5.40	H		RTU-2	4
5			H	6.70	4	70	C	60	6	5.40	H			6
7	EF-1		H	1.60	10	30	A	20			I		SPARE	8
9			E	7.60	1	3P	B	2P	12	1.20	E		BEV STATION ICE COND UNIT	10
11	46 - PROD CNTRL PANEL		E	7.60	1		C	20	12	1.20	E			12
13			E	7.60	1	125	A	2P	12	1.20	E		DRIVE THRU ICE COND UNIT	14
15	WALK IN FREEZER		E	1.20	12	2P	B	20	12	1.20	E			16
17			E	1.20	12	20	C	2P	12	1.50	H		UH-1 HEATER	18
19	WALK IN COOLER		E	0.40	12	20	A	20	12	1.50	H			20
21	SPACE						B	20	12	1.20	E		LOOP DETECTORS	22
23	SPACE						C	20	12	1.20	E		DRIVE THRU MENUBOARD	24
25	SPACE						A	20	12	1.20	E		DRIVE THRU SPEAKER CANOPY	26
27	SPACE						B						SPACE	28
29	SPACE						C						SPACE	30
31	SPACE						A						SPACE	32
33	SPARE		I			20	B						SPACE	34
35	SPARE		I			20	C						SPACE	36
37			S	8.05	RISER	3P	A	3P	RISER	7.90	S			38
39	PANEL 'B'		S	8.05	RISER		B		RISER	7.90	S		PANEL 'C'	40
41			S	8.05	RISER	150	C	150	RISER	7.90	S			42

KVA PER PHASE= BUS A: 41.55 / BUS B: 40.45 / BUS C: 40.75 / TOTAL KVA: 122.76

	KVA		DEMAND FACTOR		DEMAND KVA
(L) LIGHTING:	0.00	X	1.25	=	0.00
(R) RECEPTACLES:	0.00	X	1.00	=	0.00
(R) RECEPTACLES:	0.00	X	0.50	=	0.00
(H) HVAC:	40.90	X	1.00	=	40.90
(E) EQUIPMENT:	34.00	X	1.00	=	34.00
(K) KITCHEN EQUIP:	0.00	X	0.65	=	0.00
(S) SUBFEED:	47.86	X	1.00	=	47.86
LARGEST MOTOR:	0.00	X	0.25	=	0.00
TOTAL DEMAND KVA:					122.76

PANEL CALCULATIONS	
DEMAND KVA:	122.76
TIMES 1000	
DIVIDED BY 208	
DIVIDED BY 1.732	
DEMAND AMPS:	340.74

JOB NAME: Arby's - Port Orange
MPS #: 218083
DATE LAST MODIFIED 8/16/2018

MANUFACTURER: SQUARE D | MLO OR MCB: MCB | PANEL: B
TYPE: NQ | FEED: BOTTOM | VOLTAGE: 120/208V, 3 PH, 4 WIRE
MOUNTING: SURFACE | CU / AL WIRE: CU | MAIN AMPS: 100 AMP
LOCATION: ELECTRICAL ROOM | AIC RATING: SEE RISER | FEEDER: 100 AMP | SPACES: 42

BREAKER OPTIONS:
GFI PROVIDE GFI BREAKER

NOTES: SEE RISER DIAGRAM FOR WIRE & CONDUIT SIZES

CKT NO.	LOAD	OPT	CODE	KVA	WIRE	BRKR	PHASE	BRKR	WIRE	KVA	CODE	OPT	LOAD	CKT NO.
1	22 - DISHWASHER		K	2.10	10	2P	A	20	12	0.40	K		52 - SLICER	2
3			K	2.10	10	30	B	2P	10	2.40	K		12 - SHAKE MACHINE	4
5	39 - DRIVE THRU ORDER SYSTEM		E	0.20	12	20	C	30	10	2.40	K			6
7	32 - ICE MAKER		E	0.20	12	20	A	20	12	1.10	K		8 - 8 HEAD DRINK DISPENSER	8
9	75 - DRIVE THRU WIND. OPENER		E	0.10	12	20	B	2P	8	2.50	E		99 - FUTURE AIR CURTAIN	10
11	41 - FRY DUMP		K	1.60	12	2P	C	40	8	2.50	E			12
13			K	1.60	12	20	A	20	12	1.00	K		49 - COFFEE MAKER	14
15	16 - COOK & HOLD CABINET	GFI	K	0.60	12	20	B	20	12	0.70	I		EQ. POS SERVICE AREA	16
17	15 - SAFE		E	0.20	12	20	C	20			I		SPARE	18
19	CEILING RECEPTS		R	0.40	12	20	A	20	12	0.80	E	GFI	16 - COOK AND HOLD CABINET	20
21	CO2 MONITORING SYSTEM		E	0.10			B	20	12	1.20	K	ST	43 - 2 BANK FRYER	22
23	43 - 2 BANK FRYER	ST	K	1.20	12	20	C	ST			I	ST	SHUNT TRIP	24
25	SHUNT TRIP	ST	I			ST	A	20			I		SPARE	26
27	43 - 2 BANK FRYER	ST	K	1.20	12	20	B	20	12	1.40	K		80 - REACH-IN FREEZER	28
29	SHUNT TRIP	ST	I			ST	C	20	12	0.80	E		16 - COOK AND HOLD CABINET	30
31	HEAT TRACE		E	0.30	12	20	A	20			I		SPARE	32
33	SPARE		I			20	B	20	12	0.50	K		HOOD CONTROL/GAS SOLEN.	34
35	84 - BAG IN BOX		K	0.50	12	20	C	20	12	0.10	L		HOOD LIGHTING	36
37	96 - GREASE STORAGE		E	0.20	12	20	A	20	12	0.10	E		27 - WATER HEATER CTRL	38
39	RESTROOM AUTO SENSORS		E	0.40	12	20	B	20	12	0.20	E		92 - ICE MAKER	40
41	2 - 12 HEAD DRINK DISPENSER		K	0.60	12	20	C	20	12	0.80	E	GFI	47 - GRAB & GO	42

KVA PER PHASE= BUS A: 8.20 / BUS B: 13.40 / BUS C: 10.90 / TOTAL KVA: 32.50

	KVA		DEMAND FACTOR		DEMAND KVA
(L) LIGHTING:	0.10	X	1.25	=	0.13
(R) RECEPTACLES:	0.40	X	1.00	=	0.40
(R) RECEPTACLES:	0.00	X	0.50	=	0.00
(H) HVAC:	0.00	X	1.00	=	0.00
(E) EQUIPMENT:	9.40	X	1.00	=	9.40
(K) KITCHEN EQUIP:	21.90	X	0.65	=	14.24
(S) SUBFEED:	0.00	X	1.00	=	0.00
LARGEST MOTOR:	0.00	X	0.25	=	0.00
TOTAL DEMAND KVA:					24.16

PANEL CALCULATIONS	
DEMAND KVA:	24.16
TIMES 1000	
DIVIDED BY 208	
DIVIDED BY 1.732	
DEMAND AMPS:	67.06

JOB NAME: Arbys - Port Orange
MPS #: 218083
DATE LAST MODIFIED 8/16/2018

MANUFACTURER: SQUARE D | MLO OR MCB: MCB | PANEL: C
TYPE: NQ | FEED: BOTTOM | VOLTAGE: 120/208V, 3 PH, 4 WIRE
MOUNTING: SURFACE | CU / AL WIRE: CU | MAIN AMPS: 100 AMP
LOCATION: ELECTRICAL ROOM | AIC RATING: SEE RISER | FEEDER: [illegible] | SPACES: 42

BREAKER OPTIONS:
ST - SHUNT TRIP
GFI - GFI RATED BREAKER
BL - BREAKER WITH LOCK

NOTES: SEE RISER DIAGRAM FOR WIRE & CONDUIT SIZES

CKT NO.	LOAD	OPT	CODE	KVA	WIRE	BRKR	PHASE	BRKR	WIRE	KVA	CODE	OPT	LOAD	CKT NO.
1			E	0.50	12	3P	A	3P	8	1.20	E			2
3	33 - WALK IN COOLER COND. UNIT		E	0.50	12		B		8	1.20	E		32 - WALK-IN FRZR COND. UNIT	4
5			E	0.50	12	20	C	40	8	1.20	E			6
7	DRIVE-THRU TIMER SYSTEM	GFI	E	0.80	12	20	A	20	12	0.10	E	GFI	MICROPHONE SPEAKER	8
9	63 - MUSIC SYSTEM		E	0.60	12	20	B	20	[illegible]		R		RECEPT[illegible] DESK	10
11	EQ. SATELLITE RECEIVER		R	0.50	12	20	C	20	[illegible]	0.20	E		DATA TERMINAL BOARD	12
13	RESTROOM LIGHTING		L	0.40	12	20	A	20	12	0.50	E		POS/MONITOR (DRIVE-THRU)	14
15	EQ POS/MONITOR (FRY DUMP)	GFI	K	0.50	12	20	[illegible]	[illegible]	12	0.90	R		SHOW WINDOW RECEPTS	16
17	DINING TV		R	[illegible]	12	20	C	[illegible]	12	[illegible]	R		DINING RECEPTS	18
19	DINING TV		R	0.90	12	20	A						SPACE	20
21	DINING LIGHTING		L	0.60	[illegible]	20	B	20	12	[illegible]	L	BL	NIGHT LIGHTS	22
23	DINING LIGHTING		L	0.30	[illegible]	20	C	20	[illegible]	[illegible]	L		COOLER LTG	24
25	SERVICE LIGHTING		L	0.40	[illegible]	20	[illegible]	20	[illegible]	[illegible]	L		FRZR LTG	26
27	KITCHEN LIGHTING		L	[illegible]	[illegible]	20	[illegible]	20	[illegible]	0.30	R		ROOFTOP RECEPTS	28
29	SPARE		I			20	[illegible]	[illegible]	12	1.20	K		17 - CONVECTION OVEN	30
31	ARBYS SIGN		L	[illegible]	12	[illegible]	A	[illegible]	12	1.20	K			32
33	EXTERIOR LTG		[illegible]	[illegible]	12	[illegible]	B	20	12	0.30	R		DINING RECEPTS	34
35	EXTERIOR LTG		[illegible]	[illegible]	12	[illegible]	C	20	12	0.70	R		RECEPTS/WIFI	36
37	ARBYS SIGN		L	[illegible]	12	[illegible]	[illegible]	20	12	0.50	E	GFI	EQ POS - DRIVE THRU	38
39	EQ POS - DRIVE THRU	[illegible]	E	[illegible]	12	[illegible]	B	2P	12	1.20	K		17 - CONVECTION OVEN	40
41	SPARE		I			20	C	20	12	1.20	K			42

KVA PER PHASE= BUS A: 9.00 / BUS B: 7.60 / BUS C: 7.60 / TOTAL KVA: 24.20

	KVA		DEMAND FACTOR		DEMAND KVA
(L) LIGHTING:	[illegible]	X	[illegible]	=	6.75
(R) RECEPTACLES:	[illegible]	X	1.00	=	5.00
(R) RECEPTACLES:	[illegible]	X	[illegible]	=	0.00
(H) HVAC:	[illegible]	X	1.00	=	0.00
(E) EQUIPMENT:	[illegible]	X	1.00	=	8.50
(K) KITCHEN EQUIP:	[illegible]	X	0.65	=	3.45
(S) SUBFEED:	0.00	X	1.00	=	0.00
LARGEST MOTOR:	0.00	X	0.25	=	0.00
TOTAL DEMAND KVA:					23.70

PANEL CALCULATIONS	
DEMAND KVA:	23.70
TIMES 1000	
DIVIDED BY 208	
DIVIDED BY 1.732	
DEMAND AMPS:	65.77

JOB NAME: Arbys - Port Orange
MPS #: 218083
DATE LAST MODIFIED 8/15/2018

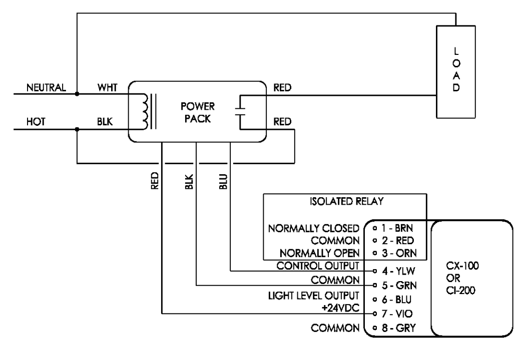

(1) TYPICAL OCCUPANCY SENSOR WIRING DIAGRAM
N.T.S.

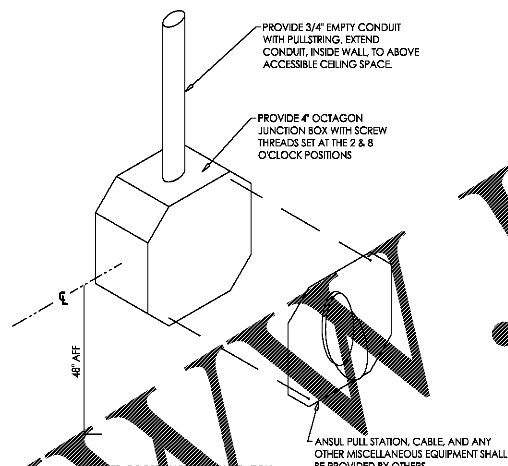

NOTE: COORDINATE EXACT LOCATION WITH AUTHORITY HAVING JURISDICTION, FIRE INSPECTOR AND ARCHITECT PRIOR TO ROUGH-IN.

(2) ANSUL PULL STATION
N.T.S.

LIGHTING CONTROL PANEL SCHEDULE

RELAY	CIRCUIT NUMBER	AREA CONTROLLED	CONTROL	VOLTS
1	C-21	DINING LIGHTING	LVS/TC	120
2	C-23	DINING LIGHTING	LVS/TC	120
3	C-25	SERVICE LIGHTING	LVS/TC	120
4	C-27	KITCHEN LIGHTING	LVS/TC	120
5	[illegible]	EXTERIOR LIGHTING	TC/PC	120
6	C-3[illegible]	EXTERIOR LIGHTING	TC/PC	120
7	C-31	SIGNAGE	TC/PC	120
8	C-37	SIGNAGE	TC/PC	120
9	B-38	WATER HEATER PUMP	TC	120
10	C-16	SHOW WINDOW	TC	120
11		SPARE		120
12		SPARE		120
13		SPARE		120
14		SPARE		120
15		SPARE		120
16		SPARE		120

TC = TIME CLOCK
PC = PHOTOCELL
LVS = LOW VOLTAGE SWITCH

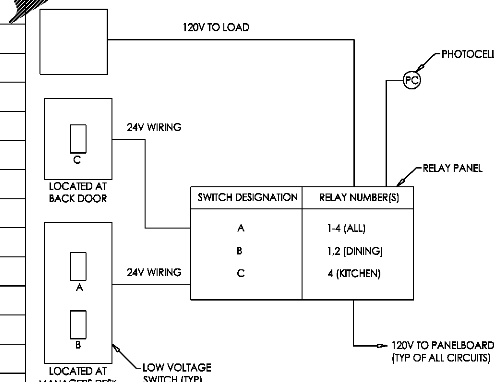

(3) LIGHTING CONTROL WIRING DIAGRAM
N.T.S.

GROUNDING ELECTRODE DETAIL GENERAL NOTES:

A. ALL GROUNDING ELECTRODES PRESENT SHALL BE BONDED TOGETHER.
B. ALL GROUNDING ELECTRODE CONDUCTORS SHALL BE SIZED PER NEC TABLE 250.66 UNLESS NOTED OTHERWISE.
C. GROUND RING SHALL BE #2 CU MINIMUM WITH FULL SIZE BONDING JUMPER.
D. ALL BONDING JUMPERS SHALL BE SIZED PER NEC TABLE 250.122 UNLESS NOTED OTHERWISE.
F. THIS DETAIL SHOWS ALL SUPPLEMENTAL GROUNDING METHODS. PER NEC 250.52(A)[1] ONE OF THE METHODS SHOWN MUST SUPPLEMENT BONDING TO WATER METER.

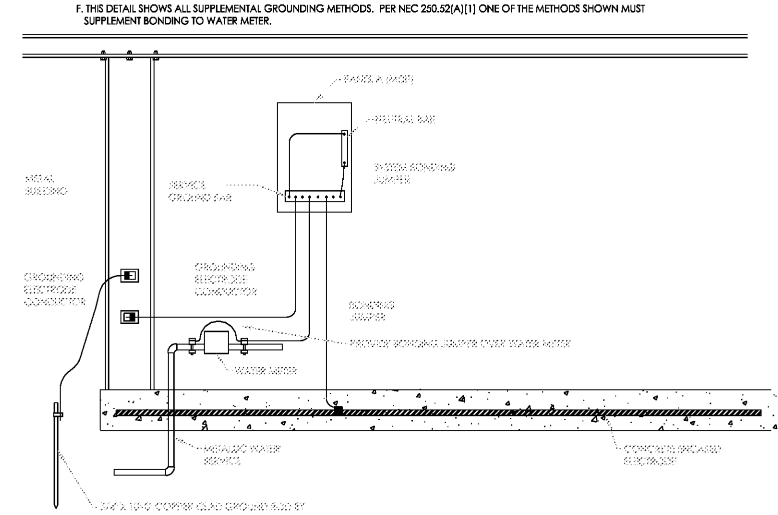

(4) GROUNDING ELECTRODE SYSTEM DETAIL
N.T.S.

(2) ELECTRICAL PANEL SCHEDULES
SCALE: NOT TO SCALE

8/16/2018 11:43:20 AM E:\2180\218083 - Arbys Port Orange\Drawings\E4.dgn

REVISIONS	BY

OLIVERI ARCHITECTS
AA-0002921
Member of the American Institute of Architects
32707 US Hwy. 19 • Palm Harbor, FL 34684
Phone 727 . 781 . 7525 • Fax 727 . 781 . 6623
• www.oliveriarchitects.com •

© 2018 OLIVERI ARCHITECTS ALL INFORMATION CONTAINED IN THIS DRAWING IS THE SOLE PROPERTY OF OLIVERI ARCHITECTS. ALL RIGHTS RESERVED.

Michael P. Spychala P.E.
Fla PE# 31533
Fla COA# 3967

New Building for
ARBY'S
Store #8149
1058 Dunlawton Ave.
Port Orange, Florida

Date: 08. 24. 18
Scale: AS NOTED
Project Mgr: MPS
Drawn: MPS
Job: 18-082
Sheet E4

Order Plans @ www.LDLine.com