STRUCTURAL NOTES

GENERAL:

A. THE FOLLOWING NOTES APPLY TO ALL STRUCTURAL DRAWINGS.

B. ALL DESIGN AND CONSTRUCTION SHALL BE IN ACCORDANCE WITH
THE INTERNATIONAL BUILDING CODE 2015 EDITION, GEORGIA AMENDMENTS.

C. THE GENERAL CONTRACTOR SHALL VERIFY ALL DIMENSIONS AND SITE CONDITIONS AND NOTIFY ARCHITECT OF ANY DISCREPANCIES PRIOR TO PROCEEDING WITH WORK FOR DIMENSIONS NOT SHOWN ON STRUCTURAL DRAWINGS, SEE ARCHITECTURAL DRAWINGS.

D. THE STRUCTURE SHOWN ON THESE DRAWINGS IS SELF-SUPPORTING ONLY IN ITS COMPLETED FORM. THE CONTRACTOR SHALL BE RESPONSIBLE FOR PROVIDING THE DESIGN, ADEQUACY, SAFETY, AND STABILITY OF ALL TEMPORARY ERECTION BRACING AND SHORING.

E. THE GENERAL CONTRACTOR SHALL COORDINATE ALL SIZES AND LOCATIONS OF ROOF PENETRATIONS WITH MECHANICAL AND ARCHITECTURAL DRAWINGS. ALL PENETRATIONS THROUGH ROOF DECK GREATER THAN 12" SQUARE SHALL BE FRAMED AS PER INDUSTRY STANDARDS AND WILL BE SHOWN FOR VERIFICATION IN SHOP DRAWINGS.

F. UNLESS NOTED, ELEVATIONS SHOWN ARE TO BE VERIFIED WITH ELEVATION MARKS OF ARCHITECTURAL DRAWINGS.

G. THE CONTRACTOR SHALL BE RESPONSIBLE FOR MEANS, METHODS, TECHNIQUES, SEQUENCES, AND PROCEDURES OF CONSTRUCTION IN ORDER TO COMPLY WITH THE CONTRACT DRAWINGS.

SHOP DRAWINGS:

A. THE CONTRACTOR SHALL SUBMIT, AS REQUIRED, PRINTS OF SHOP DRAWINGS FOR ALL FABRICATED MATERIALS TO ARCHITECT FOR REVIEW.

B. REVIEW OF SHOP DRAWINGS BY THE ARCHITECT\ENGINEER DOES NOT RELIEVE THE CONTRACTOR OF THE SOLE RESPONSIBILITY FOR ERRORS AND OMISSIONS ASSOCIATED WITH THE PREPARATION OF THOSE SHOP DRAWINGS.

C. SHOP DRAWINGS REQUIRING A SPECIAL ENGINEERING DESIGN BY THE FABRICATOR SHALL BE STAMPED BY A REGISTERED ENGINEER OF RECORD IN THE STATE WHICH CONSTRUCTION WILL OCCUR BEFORE SUBMITTING FOR REVIEW BY THE ARCHITECT\ENGINEER

SHALLOW FOUNDATIONS:

A. DESIGN SOIL BEARING PRESSURE IS 1500 PSF.

B. THE SITE SHALL BE PREPARED UNIFORM IN ACCORDANCE WITH CIVIL DRAWINGS & SPECIFICATIONS, A QUALIFIED GEOTECHNICAL ENGINEER SHALL VERIFY ALL COMPACTION AND BEARING CONDITIONS AND REPORT TO THE ARCHITECT\ENGINEER ANY VARIATIONS.

C. ALL EXCAVATIONS AND BUILDING PADS SHALL BE INSPECTED BY A QUALIFIED GEOTECHNICAL ENGINEER TO VERIFY THE DESIGN ASSUMPTIONS AND REPORT ADVERSE CONDITIONS.

D. WHERE FILL IS REQUIRED, IT SHALL BE PLACED IN ACCORDANCE WITH INSTRUCTIONS OF A QUALIFIED GEOTECHNICAL ENGINEER TO MAINTAIN DESIGN BEARING PRESSURE.

E. FOOTING ELEVATIONS GIVEN ARE FOR THE PURPOSE OF DESIGN. SOIL BELOW FOOTING NOT MEETING DESIGN BEARING PRESSURE SHALL BE EXCAVATED TO A DEPTH OF VERIFIABLE DESIGN PRESSURE AND BACKFILLED WITH 57 STONE TO A LEVEL OF FOUNDATION BEARING. THIS SHALL BE UNDER SUPERVISION OF A QUALIFIED GEOTECHNICAL ENGINEER.

F. F/S DENOTES STEP IN FOOTING. SEE "TYPICAL STEPPED FOOTING" DETAIL.

CONCRETE:

A. ALL CONCRETE DESIGN AND CONSTRUCTION SHALL BE IN ACCORDANCE WITH ACI 318-95 AND ACI 301-96.

B. CEMENT SHALL BE TYPE I OR III CONFORMING TO ASTM C 150 AND CONCRETE SHALL DEVELOP A MINIMUM 28 DAY COMPRESSIVE STRENGTH AS FOLLOWS:
FOOTINGS 3000 PSI
INTERIOR SLAB-ON- GRADE 3000 PSI

C. TEST CYLINDERS SHALL BE TAKEN AS A REPRESENTATIVE SAMPLE OF CONCRETE PLACED IN THE AMOUNT 75 CUBIC YARD OR EVERY 24-HOUR PERIOD. RESULTS SHALL BE AVAILABLE AT JOB SITE.

D . TEST RESULTS SHALL BE FORWARDED TO THE ARCHITECT\ENGINEER UNLESS OTHERWISE NOTED, NORMAL WEIGHT CONCRETE (145 PCF) SHALL BE USED WITH 3/4 " MAX. COARSE AGGREGATE CONFORMING TO ASTM C 33.
(ROOF DECK TO BE LIGHT WEIGHT 115 PCF MAX.)

E. CONCRETE SLUMP SHALL BE 3" - 5" (MAX) FOR REGULAR MIX WITH SUPERPLASTICIZER ADMIXTURES INCREASING SLUMP TO 8" (MAX) CONCRETE AIR-ENTRAINMENT SHALL BE 4.5% TO 7.5% FOR EXTERIOR SLABS AND 0% TO 3% FOR INTERIOR SLABS.

F. UNLESS OTHERWISE NOTED, CONCRETE COVER FOR REINFORCING STEEL SHALL BE AS FOLLOWS:

CONCRETE CAST AGAINST EARTH 3"
FORMED CONCRETE EXPOSED TO EARTH OR WEATHER 2"
INTERIOR SLABS 1"
EXPOSED WALLS 1 1/2"

G. NO ADDITIONAL WATER SHALL BE ADDED TO THE CONCRETE AT THE JOB SITE.

DESIGN LOADS:

A. DESIGN ROOF DEAD LOAD:
1. 20 PSF

B. DESIGN ROOF LIVE LOAD:
1. 20 PSF
2. 30 PSF AT HVAC UNIT SUPPORT.
3. REDUCTIONS APPLIED PER TRIBUTARY
4. AREA AS PERMITTED BY CODE,

C. OMITTED

D. DESIGN FLOOR LIVE LOAD:
1. 125 PSF SLAB-ON-GRADE

E. DESIGN SNOW LOAD:
1. GROUND SNOW LOAD, PG = 5 PSF

F. DESIGN WIND LOAD:
1. BASIC WIND SPEED (3 SECONDS GUST): 90 MPH
2. WIND IMPORTANCE FACTOR, 1w = 1.0
3. BUILDING CATEGORY: 1
4. WIND EXPOSURE CATEGORY: B
5. COMPONENTS AND CLADDING WIND PRESSURE:
EDGE ZONE: -25, +20 PSF, INTERIOR ZONE: -21, +20 PSF

G. DESIGN SEISMIC INFORMATION
1. SEISMIC USE GROUP: 1.
2. SPECTRAL RESPONSE COEFFICIENT, SD = 0.40
3. SPECTRAL RESPONSE COEFFICIENT, SD1 = 0.19
4. SITE CLASS: D
5. BASE SEISMIC- FORCE RESISTING SYSTEM:
SHEER WALL
6. DESIGN BASE SHEAR:
7. ANALYSIS PROCEDURE: EQUIVALENT LATERAL FORCE (1617.4)
8. DESIGN CATEGORY = C
9. SOIL TYPE S = 2.0
10. REPONSE FACTOR R = 3.5
11. APLIFICATION FACTOR Cd = 2.25

GROUT AND MORTAR:

A. GROUT UNDER BEARING PLATES SHALL BE NON-SHRINK SIKAGROUT 212 (OR APPROVED EQUAL), MIXING AND PLACEMENT SHALL BE IN ACCORDANCE WITH MANUFACTURERS INSTRUCTIONS.

SLABS:

A. C.J. DENOTES CONCRETE SLAB "CONTROL JOINT" WHICH SHALL BE CUT INTO THE SLABS AT A DEPTH OF 1/4 TIMES THE THICKNESS OF THE SLAB WITHIN 12 HOURS OF PLACING THE CONCRETE. MAXIMUM SPACING OF INTERIOR SLAB CONTROL JOINTS, UNLESS OTHERWISE NOTED, SHALL BE 20'-0" (MAX) IN EACH DIRECTION.

B. SLAB CONSTRUCTION JOINTS SHALL BE USED IN PLACE OF CONTROL JOINTS WHERE NEEDED TO INTERRUPT A CONTINUOUS POUR. SLAB CONSTRUCTION JOINTS SHALL BE KEYED. JOINT LOCATIONS SHALL BE REVIEWED BY ARCHITECT.

C. PLACEMENT OF WELDED WIRE MESH IN SLAB, WHERE SPECIFIED, SHALL BE AT A CONSISTENT DEPTH OF 1"-2" FORM T\SLAB OVERLAP EACH REINFORCING SHEET TWO FULL PANELS AND TIE CROSS WIRES ON EACH SIDE.

D. REFER TO ARCHITECTURAL\MECHANICAL FOR SLAB FINISHES, SLAB DEPRESSIONS, ELEVATIONS, AND ENCASED OR EMBEDDED ITEMS.

E. PLUMBING AND ELECTRICAL CONDUITS SHALL BE PLACED BELOW THE SLAB AND NOT WITHIN THE SLAB. VERTICAL PENETRATIONS ARE ALLOWED.

F. COLUMN BOX-OUTS SHALL BE USED TO ISOLATE AN ADEQUATE AREA AROUND COLUMN BASE PLATES TO PROVIDE FOR COLUMN PLACEMENT AND LEVELING. BOX-OUTS ARE TO BE CLEAN AND FREE OF DEBRIS TO TOP OF FOOTING PRIOR TO FILLING WITH CONCRETE.

REINFORCING STEEL:

A. REINFORCING STEEL AND ACCESSORIES SHALL BE DETAILED IN ACCORDANCE WITH ACI (MANUAL OF STANDARD PRACTICE FOR DETAILING REINFORCED CONCRETE STRUCTURES AND CRSI (MANUAL OF STANDARD PRACTICE) LATEST EDITIONS.

B. REINFORCING STEEL SHALL CONFORM TO ASTM A 615, GRADE 60 (UNLESS NOTED)

C. ALL TENSION SPLICES , INCLUDING SPLICES FROM BARS LABELED CONTINUOUS , SHALL BE CLASS "B" AND COFORM TO ACI 318-95.

D. WELDED WIRE FABRIC SHALL CONFORM TO ASTM A 185 AND BE LAPPED TWO FULL PANELS AND TIED ON EACH OTHER.

E. LONGITUDINAL REINFORCING BARS IN FOOTINGS SHALL BE PLACED CONTINUOUS AT CORNERS AND INTERSECTIONS.

F. FOR EVERY VERTICAL OR HORIZONTAL BAR DISCONTINUED BY AN OPENING, ONE BAR (MIN. OF 2 BARS) SHALL BE ADDED AT SIDE OF OPENING (HALF TO EACH SIDE - TYPICAL) .

G. SUBMIT REINFORCING STEEL SHOP DRAWINGS.

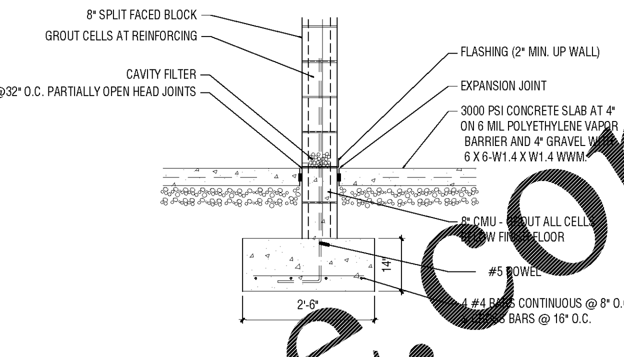

9 EXTERIOR WALL
3/4" = 1'-0"

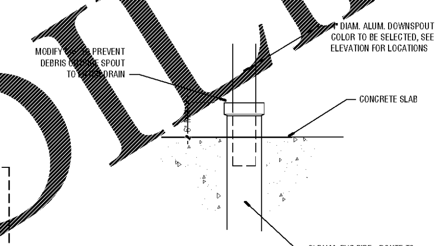

6 DOWNSPOUT @ SLAB
3/4" = 1'-0"

GENERAL STRUCTURAL NOTE:

1. STRUCTURAL WORK TO INCLUDE ALL WORK SHOWN ON STRUCTURAL DRAWINGS AND ANY AND ALL STRUCTURAL WORK SHOWN ON ANY OTHER DRAWINGS IN THE SET. BIDS SHALL BE INCLUSIVE OF ALL STRUCTURAL WORK SHOWN ON ALL DRAWINGS AND SHALL INCLUDE ALL ACCESSORIES AND RELATED ITEMS REQUIRED FOR COMPLETE AND OPERABLE SYSTEMS AND ALL WORK AND ITEMS AS REQUIRED BY THE LATEST VERSION OF ALL APPLICABLE CODES.

2. COORDINATE WORK WITH ALL EXISTING CONDITIONS. REPORT ANY DISCREPANCIES OR CONFLICTS TO THE ARCHITECT PRIOR TO PROCEEDING WITH THE AFFECTED PORTION OF THE WORK.

4. REQUEST CLARIFICATIONS OF ANY CONFLICTS BETWEEN STRUCTURAL AND ARCHITECTURAL DRAWINGS PRIOR TO BIDDING.

5. ALL SLOPED FLOORS TO BE ⅛" PER FOOT.

NOTE: PROVIDE 3000 PSI AT 4" THICK CONCRETE SLAB FOR TRANSFORMER WITH 8" X 8" THICKENED EDGES ON 4" GRAVEL. VERIFY SIZE AND PLACEMENT WITH UTILITY COMPANY.

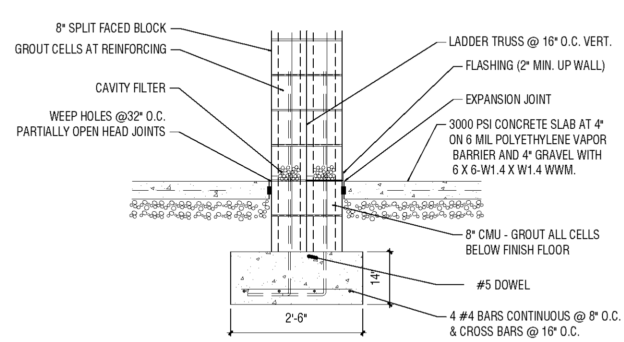

10 FOUNDATION AT COULMN
3/4" = 1'-0"

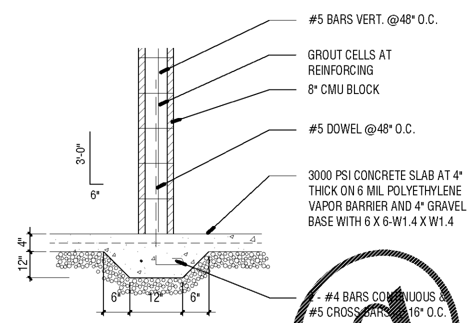

7 FOUNDATION @ INTERIOR WALL
3/4" = 1'-0"

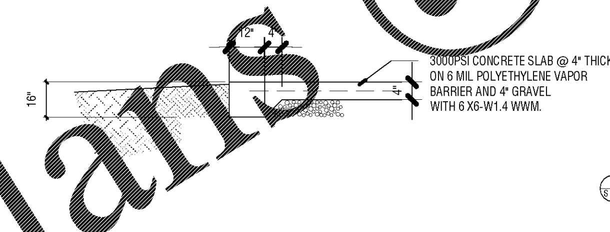

EDGE OF SLAB
3/4" = 1'-0"

NOTE:
1. EXPANSION JOINT TO BE FORMED FROM THE POURING OF TWO DIFFERENT CONCRETE POURS.
2. APPLY BLOCK FILLER AND PRIME AND PAINT TO ALL INTERIOR CONCRETE BLOCK. COLORS TO BE SELECTED.
3. CONTROL JOINTS ARE TO BE CUT THE FOLLOWING DAY.
4. ALL INTERIOR BLOCK EXPOSED OUTSIDE CORNERS TO BE ½ RADIUS ROUNDED.

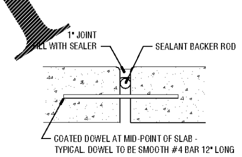

3 EXPANSION JOINT
1/4" = 1'-0"

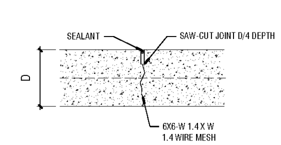

4 CONTROL JOINT
1/4" = 1'-0"

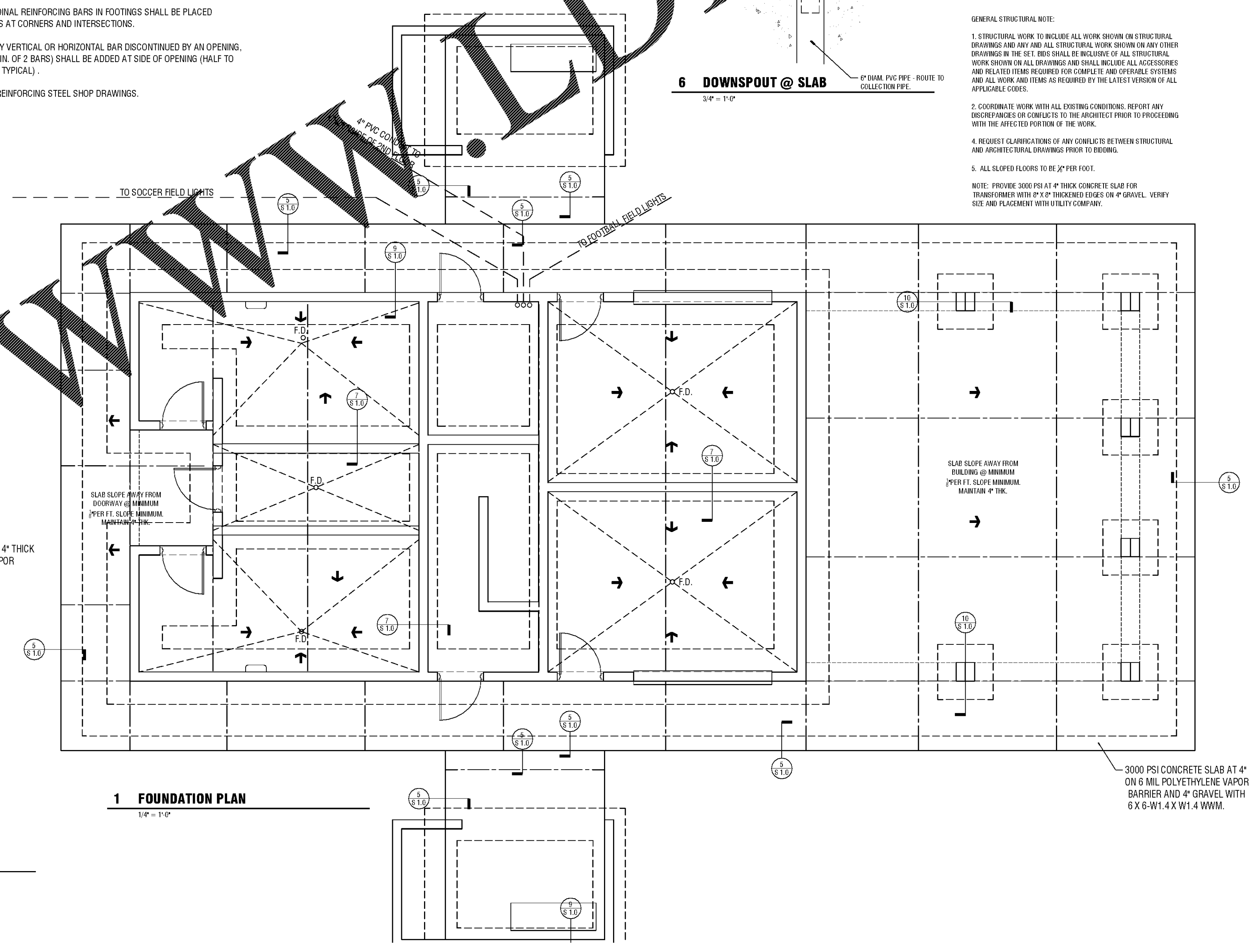

1 FOUNDATION PLAN
1/4" = 1'-0"

REVISIONS					
Number	Date:	Remarks:	Number	Date:	Remarks:
X	00-00-00	N/A			

CONSULTANTS

CARTER WATKINS ASSOCIATES ARCHITECTS, INC.
POST OFFICE BOX 1004
137 EAST WASHINGTON STREET
MONROE, GEORGIA 30655
Fax: 770/267-1064
email@carterwatkins.com www.carterwatkins.com

SEAL
STATE OF GEORGIA
BENJAMIN MERCER CARTER
REGISTERED ARCHITECT

DOUGLAS COUNTY BOUNDARY WATERS PARK CONCESSION STAND

DOUGLASVILLE, GEORGIA

SHEET TITLE:
FOUNDATION PLAN & DETAILS

PRINTED:

NUMBER:
S 1.0

DATE: 06/19/18

PRINTED

This Document is the property of Carter Watkins Associates.
Reproduction of any kind is prohibited under Federal Copyright Laws.

Jun 19 2018 | Z:\SHARED CAD\P...\Douglas County Concession\Douglas County Concession\Sheets\S 1.0 FOUNDATION PLAN & DETAILS.dwg

Order Plans @ www.LDILine.com