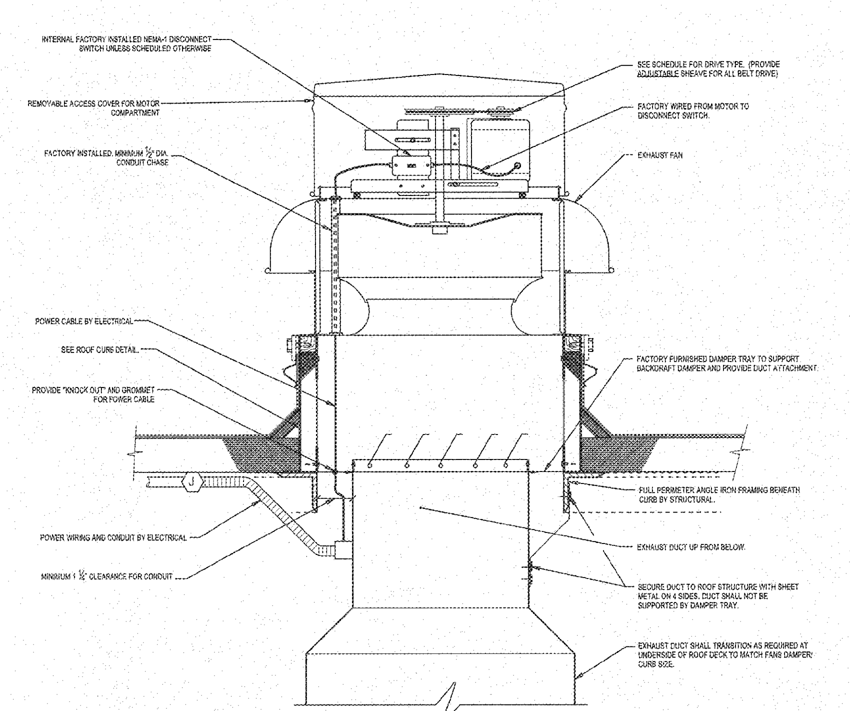

CENTRIFUGAL ROOF EXHAUST FAN DETAIL
SCALE: NONE

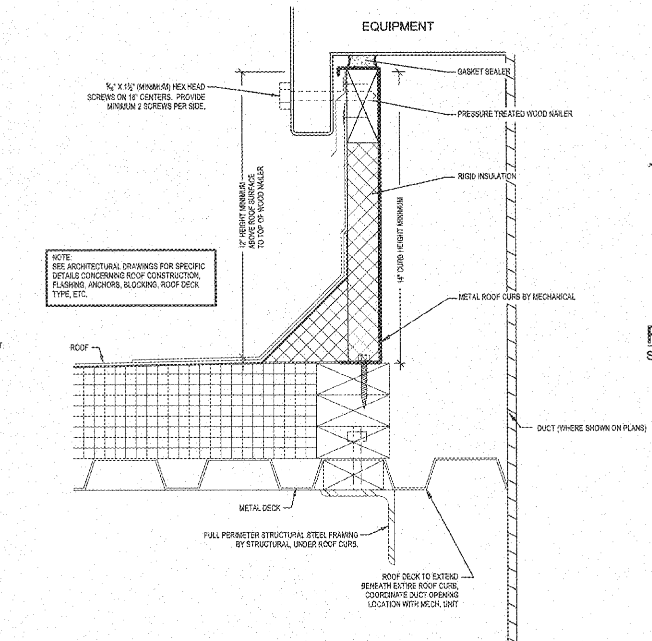

ROOF CURB DETAIL
SCALE: NONE

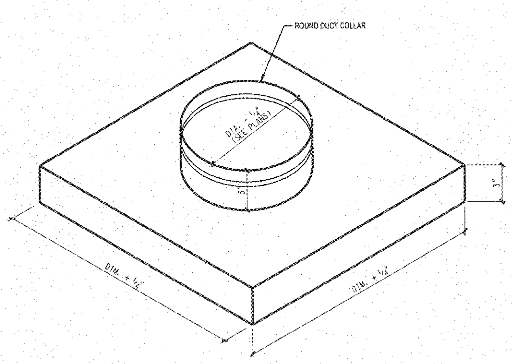

RECTANGULAR TO ROUND FLAT ADAPTER
SCALE: NONE

NOTES: (THIS DETAIL ONLY)

1. PAINT INTERIOR OF BOX MATTE BLACK.
2. MINIMUM 26 GAUGE GALV. SHEET METAL.
3. PROVIDE ½" DUCT LINER ON RETURN DUCT APPLICATIONS AND NO LINER ON EXHAUST APPLICATION.
4. ADAPTER MAY BE FABRICATED BY CONTRACTOR OR PROVIDED BY CROWN PRODUCTS MODEL #666 ADAPTER OR EQUAL.

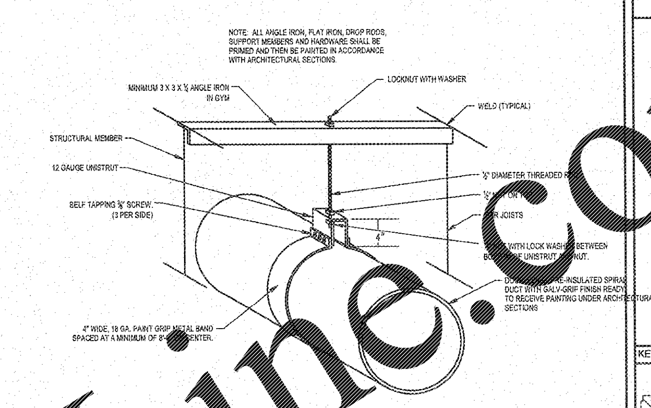

EXPOSED ROUND DUCT SUPPORT DETAIL
SCALE: NONE

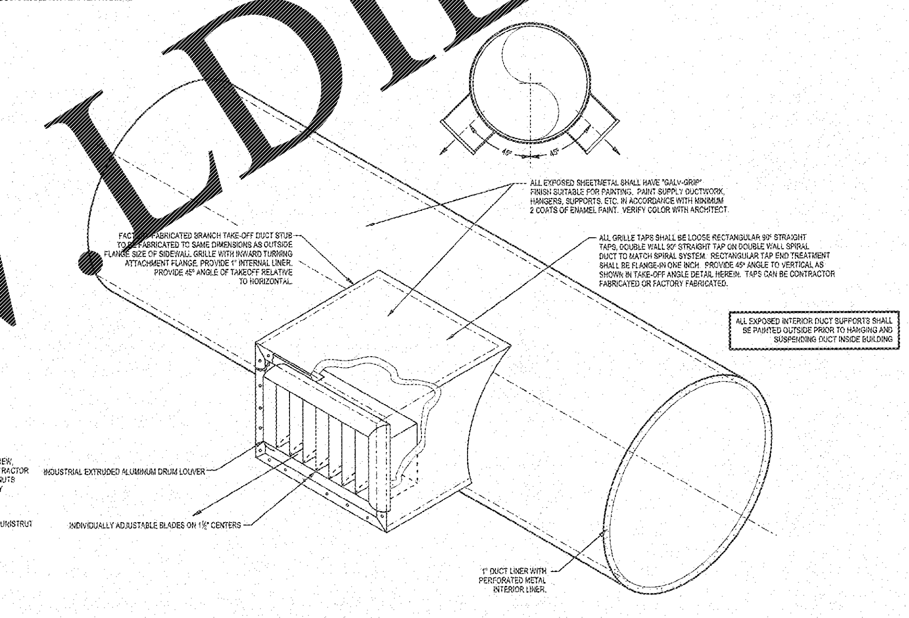

DRUM LOUVER INSTALLATION DETAIL
SCALE: NONE

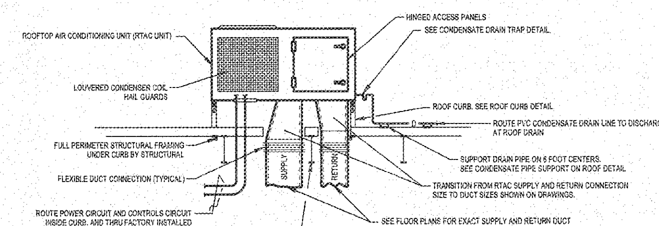

GENERAL NOTES:

1. MAINTAIN MANUFACTURERS RECOMMENDED SERVICE CLEARANCE AROUND UNIT.
2. MAINTAIN MINIMUM 10 FEET FROM ROOFTOP UNITS OUTDOOR AIR INTAKE TO EXHAUST FANS, VTR'S, ETC.
3. MAINTAIN MINIMUM 10 FEET TO ROOF EDGE.

ROOFTOP AIR CONDITIONING UNIT DETAIL
SCALE: NONE

NOTE: VERTICAL SUPPLY AND RETURN SHOWN. INSTALLATION SIMILAR FOR HORIZONTAL SUPPLY AND RETURN.

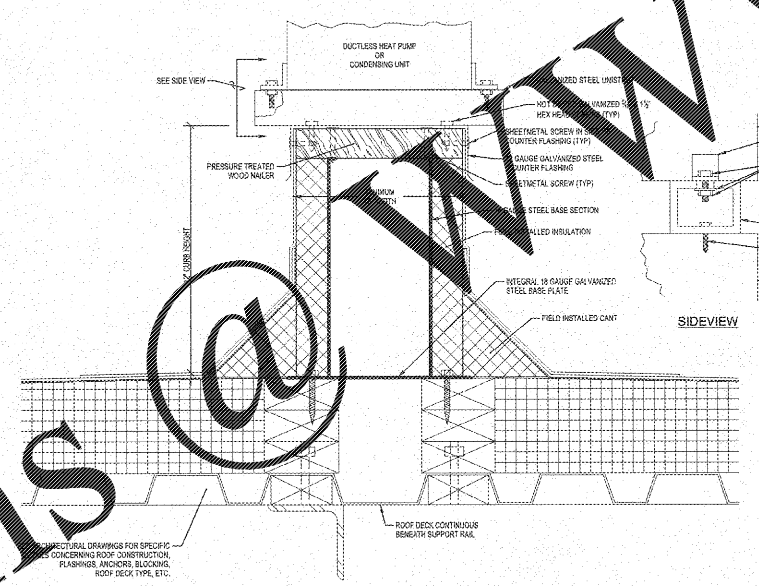

DUCTLESS HP/CU SUPPORT RAIL DETAIL
SCALE: NONE

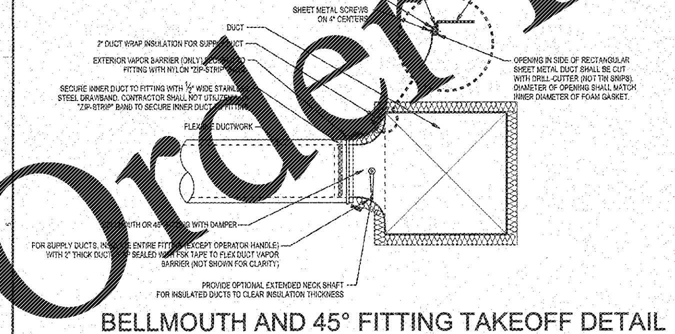

BELLMOUTH AND 45° FITTING TAKEOFF DETAIL
SCALE: NONE

NOTE: DETAIL IS TYPICAL FOR ALL FLEX DUCT RUNOUTS TO DIFFUSERS.

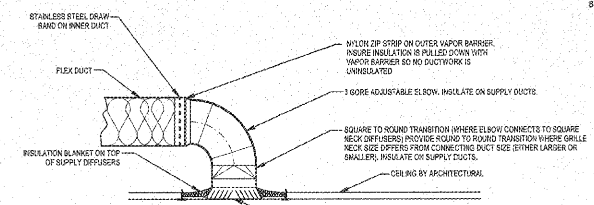

CEILING GRILLE DUCT CONNECTION DETAIL
SCALE: NONE

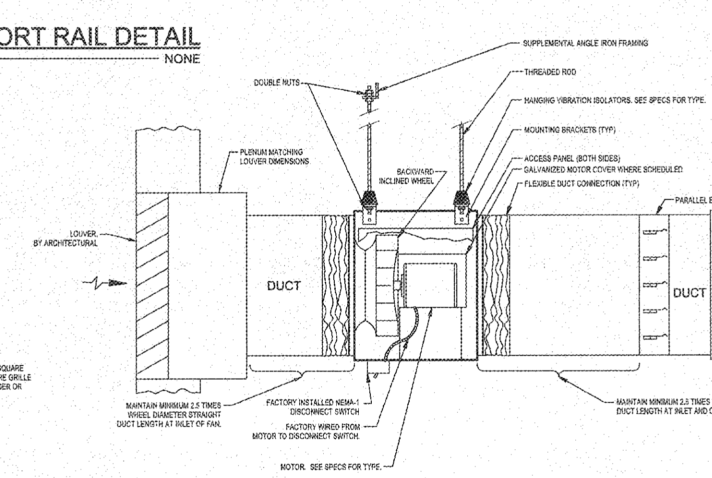

CENTRIFUGAL INLINE FAN DETAIL
SCALE: NONE

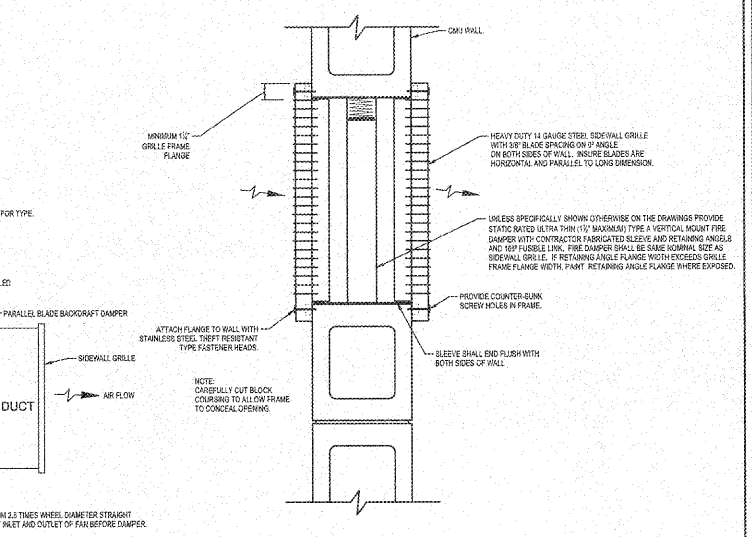

TRANSFER GRILLE DETAIL
SCALE: NONE

Order Plans @ WWW.LDILine.com

REVISIONS/ISSUANCES		
NO.	DATE	DESCRIPTION

KEYPLAN

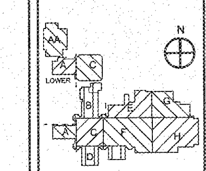

AH&P CONSULTING ENGINEERS
ANDREWS, HAMMOCK & POWELL, INC.
250 Charter Lane
Suite 100
MACON, GEORGIA 31210
MACON (478) 405-8301
FAX (478) 405-8210
WWW.AHPENGR.COM

GEORGIA REGISTERED No. 17829 PROFESSIONAL ENGINEER JAMES A. ANDREWS, JR.

STATE OF GEORGIA W. VAUGHN SMITH JR. REGISTERED ARCHITECT

Manley Spangler Smith Architects
A Professional Corporation

525 East Taylor St.
P.O. Box 880
Griffin, Georgia 30224

Office 770.227.5473
Fax 770.228.3442

PROJECT:
RENOVATIONS, MODIFICATIONS, & ADDITIONS TO HENRY COUNTY SCHOOLS - GROUP 10 WOODLAND HIGH SCHOOL (ITEM C)

CLIENT:
HENRY COUNTY BOARD OF EDUCATION

SHEET TITLE:
MECHANICAL DETAILS

I.U. : 88
F.T.E. : 1,687
FACILITY CODE: 675-0408

© 2018 Manley Spangler Smith Architects, PC

PROJECT NUMBER:	201731C
DATE:	06.07.18
SCALE:	NONE
DRAWN BY:	WDD
CHECKED BY:	JDR

SHEET NO.: M401