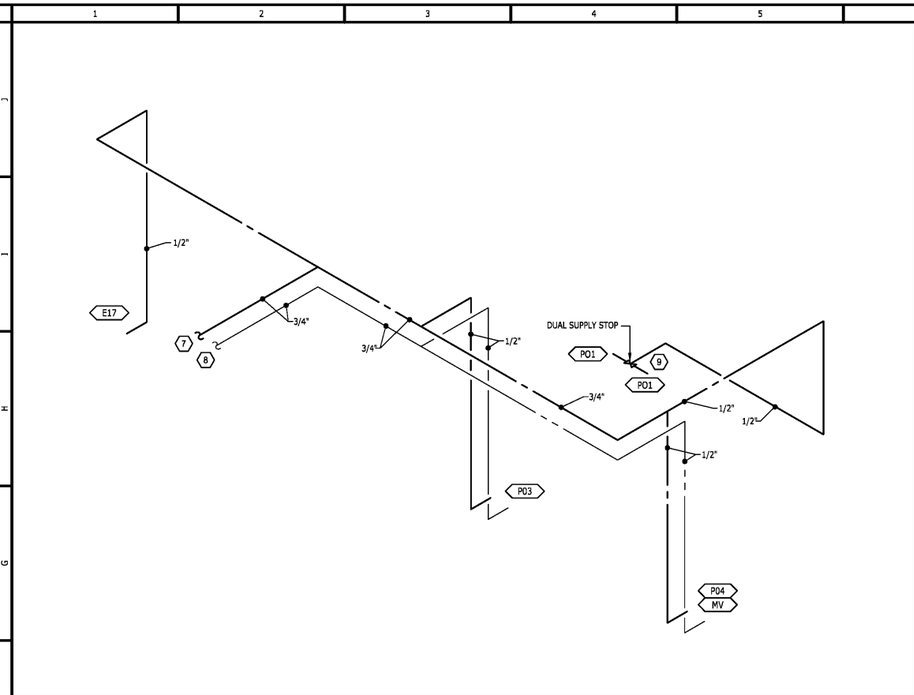

2	WATER RISER DIAGRAM
N.T.S.	

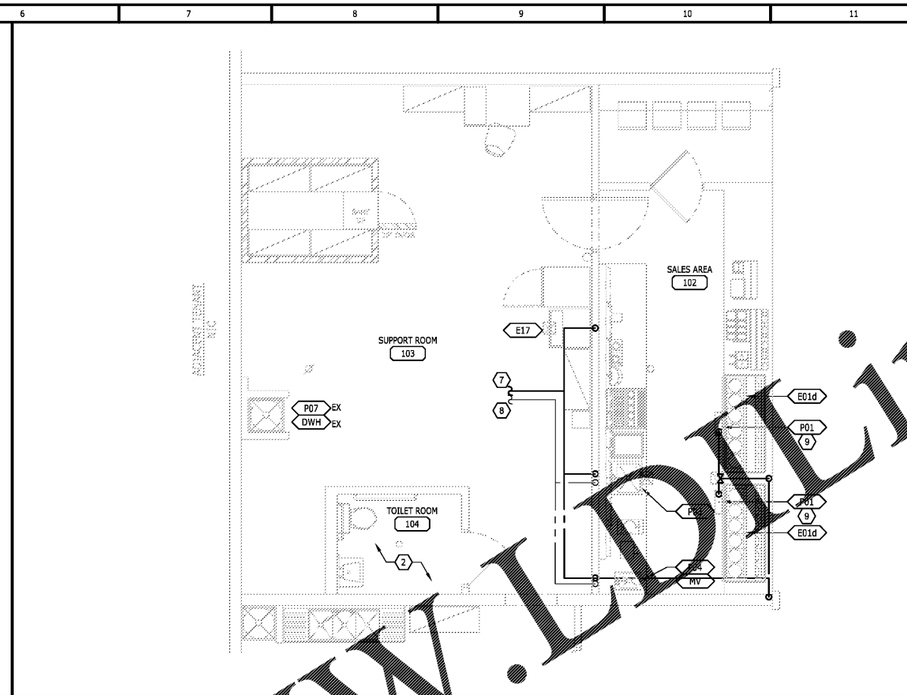

1	DOMESTIC WATER PLUMBING FLOOR PLAN
1/4" = 1'-0"	

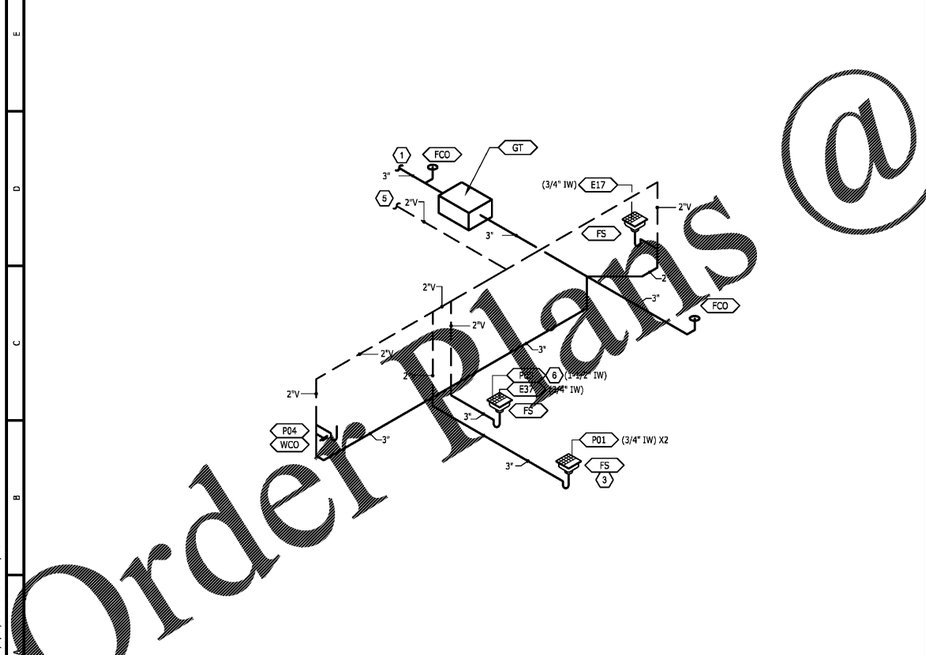

4	WASTE AND VENT DIAGRAM
N.T.S.	

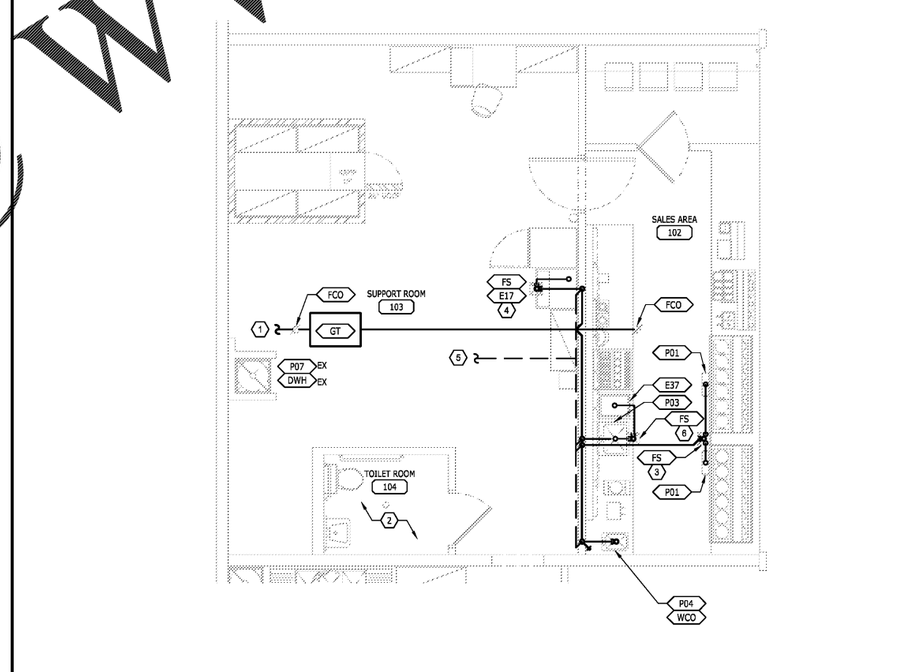

3	SANITARY PLUMBING FLOOR PLAN
1/4" = 1'-0"	

KEYED NOTES

1. CONNECT NEW SANITARY LINE TO EXISTING SANITARY LINE. VERIFY EXISTING SANITARY LINE LOCATION, DIRECTION OF FLOW, & ELEVATION PRIOR TO INSTALLATION OF ANY PIPING.
2. EXISTING TOILET ROOM TO REMAIN.
3. PROVIDE 1" INDIRECT DRAIN PIPE FROM DIPPERWELL TO FLOOR SINK WITH AIR GAP.
4. PROVIDE 3/4" INDIRECT DRAIN & 3/4" CONDENSATE DRAIN PIPING FROM ICE MACHINE AND BIN TO FLOOR SINK WITH AIR GAP.
5. CONNECT NEW 3" VENT TO EXISTING VENT PIPE AS REQUIRED. VERIFY EXACT LOCATION OF VENT PIPE PRIOR TO INSTALLATION OF ANY PIPING.
6. PROVIDE 2" INDIRECT WASTE FROM DUMP SINK TO FLOOR SINK WITH AIR GAP AS REQUIRED. FLOOR SINK SHALL BE LOCATED IN AN ACCESSIBLE LOCATION.
7. CONNECT TO EXISTING COLD WATER LINE. VERIFY EXISTING COLD WATER LINE LOCATION, SIZE AND CAPACITY PRIOR TO INSTALLATION OF ANY PIPING. VERIFY CROSS CONNECTION CONTROL AND/OR SUB-METERING AS REQUIRED BY LANDLORD AND LOCAL CODES IN FIELD.
8. CONNECT TO EXISTING HOT WATER LINE. VERIFY EXISTING HOT WATER LINE LOCATION, SIZE AND CAPACITY PRIOR TO INSTALLATION OF ANY PIPING.
9. ROUTE 1/2" COLD WATER IN CASEWORK TO DIPPERWELL AS REQUIRED. CONNECT TO DIPPEWELL WITH 1/4" FITTING ROUTED FROM SHUT-OFF VALVE TO DIPPERWELL.

XX REFERENCE SHEET A1.1 FOR KITCHEN EQUIPMENT SCHEDULE

Häagen-Dazs

SHOP# 1306
SPACE #1164
WEST TOWN MALL
7600 KINGSTON PIKE
KNOXVILLE, TN
37919

No.	Revisions	Date

pdmsdesign.com
pdms design group
2225 East Randol Mill Road, Suite #300
Arlington, Texas 76011
817.633.4200 p • 817.633.4153 f

This document contains information proprietary to PDMS Design Group and is furnished in confidence for the limited purpose of evaluation, bidding, review, or construction. This document or the contents may not be used for any other purpose and may not be reproduced or disclosed to others without the prior written consent of PDMS Design Group

DR
DANIEL A. REEVES, P.E.
2225 E. Randol Mill Rd, Suite 300
Arlington, TX 76011
(817)701-4808
FAX (817)633-4153
Tennessee License #116073

DANIEL A. REEVES REGISTERED ENGINEER AGRICULTURE COMMERCE No. 116073 STATE OF TENNESSEE 6/29/18

Project No.	180165
Scale	AS NOTED
Drawn	AH
Checked	DAR
Date	06/29/2018

Drawing Title

PLUMBING PLAN AND DIAGRAMS

Drawing No. **P1.0**

V:\180165\180165_P1.0, 6/29/2018 9:31:08 AM, CLIVINGSTON

Order Plans @ www.LDILine.com