DocuSign Envelope ID: 36EA189D-DC46-48E8-8330-D0C3ED93A0CB

2 3 4 5 6

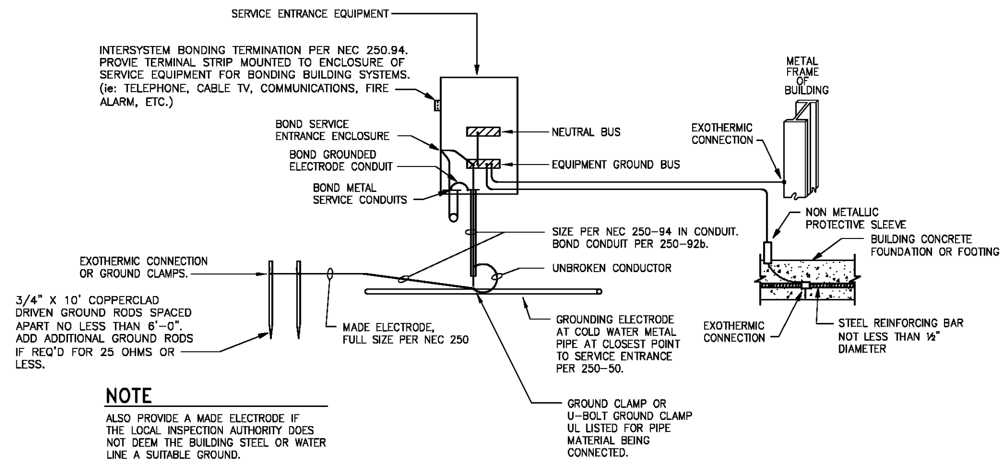

NOTE

ALSO PROVIDE A MADE ELECTRODE IF THE LOCAL INSPECTION AUTHORITY DOES NOT DEEM THE BUILDING STEEL OR WATER LINE A SUITABLE GROUND.

4 SERVICE GROUND DETAIL
NOT TO SCALE

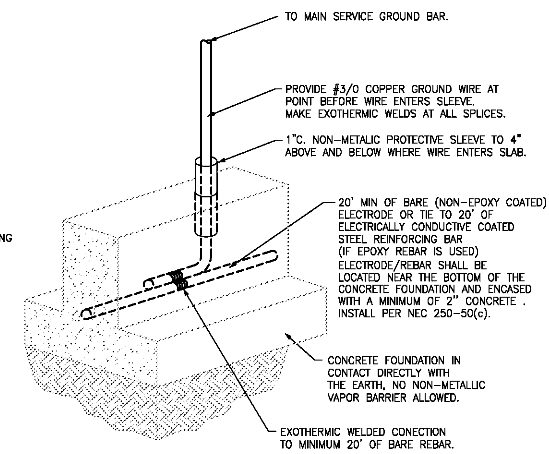

5 GROUNDING DETAIL
NOT TO SCALE

PANEL MDP

SUPPLY: 208/120V, 3-PH, 4W
MAINS: 800A MCB
INTERRUPT RATING: 42K A.I.C
MOUNTING: SURFACE

TYPE: BRANCH CIRCUIT
BUS MATERIAL: COPPER
MANUFACTURER: SQUARE-D, CUTLER HAMMER, OR EQUAL

NOTE	DESCRIPTION	TRIP	POLE	WIRE	CCT	PHASE A		PHASE B		PHASE C		CCT	WIRE	POLE	TRIP	DESCRIPTION	NOTE
.	PANEL 'OP'	200	3	3/0	1	13.7	26.1					2	2	3	400	PANEL 'SP'	.
.	.	.	.	.	3			16.1	28.0			4	SETS	.	.	.	.
.	.	.	.	.	5					13.4	28.9	6	3/0	.	.	.	.
.	PANEL 'TP'	125	3	1	7	3.1	4.4					8	6	3	60	RTU-2	.
.	.	.	.	.	9			5.2	4.4			10	.	.	.	.	.
.	.	.	.	.	11					5.4	4.4	12	.	.	.	.	.
.	RTU-1	50	3	6	13	4.0	4.4					14	6	3	60	RTU-3	.
.	.	.	.	.	15			4.0	4.4			16	.	.	.	.	.
.	.	.	.	.	17					4.0	4.4	18	.	.	.	.	.
.	RTU-4	50	3	6	19	4.0	4.0					20	6	3	50	RTU-5	.
.	.	.	.	.	21			4.0	4.0			22	.	.	.	.	.
.	.	.	.	.	23					4.0	4.0	24	.	.	.	.	.
.	EF-10	20	3	12	25	1.3	0.0					26	.	1	20	SPARE	.
.	.	.	.	.	27			1.3	0.0			28	.	1	20	SPARE	.
.	.	.	.	.	29					1.3	0.0	30	.	1	20	SPARE	.
.	FLAG POLE LIGHTING	20	1	12	31	0.2	0.0					32	.	1	20	SPARE	.
.	SPARE	20	1	.	33			0.0	0.8			34	8	1	20	SITE LIGHTING	.
.	SPARE	20	1	.	35					0.0	0.4	36	8	1	20	MONUMENT SIGN	.
.	SPARE	20	1	.	37	0.0	0.0					38	10	3	30	TVSS	.
.	SPARE	20	1	.	39			0.0	0.0			40	.	.	.	.	.
.	SPARE	20	1	.	41					0.0	0.0	42	.	.	.	.	.

	PHASE A	PHASE B	PHASE C
TOTAL KVA PER PHASE	65.3	72.4	70.4
DIVERSIFIED KVA PER PHASE	59.9	64.9	[illegible]
DIVERSIFIED TOTAL KVA	189.1 KVA		
MAXIMUM AMPS HEAVIEST PHASE (DIVERSIFIED)	540.[illegible] AMPS		

REQUIREMENTS:
1. WITH EQUIPMENT GROUND BUS
2. PROVIDE A TYPEWRITTEN DIRECTORY.

PANEL KEY NOTES:
A. PROVIDE A GFCI BREAKER.
B. PROVIDE A SHUNT TRIP BREAKER.

NEC 220 LOAD JUSTIFICATION		
LIGHTING	125%	16.5
HEATING	100%	1.7
AIR HANDLERS	100%	69.8
AIR CONDITIONING	100%	0.0
RECEPTACLES	1st 10kVA = 100% +50% OF REMAINING	32.3
WATER HEATER	100%	0.0
KITCHEN EQUIPMENT	MINUS NEC DEMAND 100%	0.0
PROCESS	100%	0.0
MISCELLANEOUS	100%	68.8

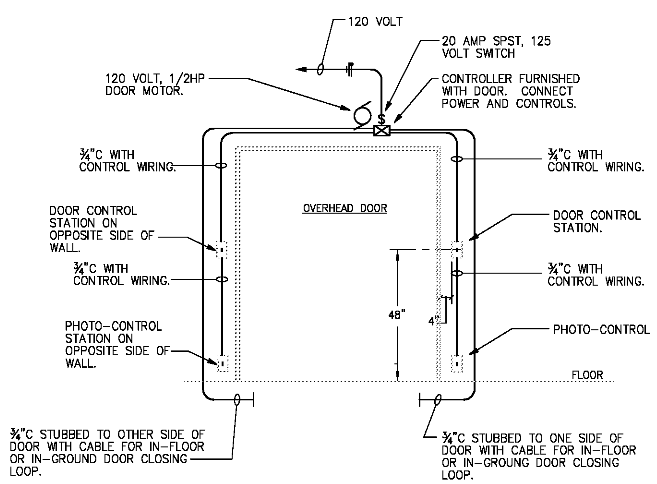

2 OVERHEAD DOOR SCHEMATIC
NOT TO SCALE

NOTES:
1. COORDINATE ALL CONDUIT ROUTING AND DEVICES WITH DOOR SUPPLIER. SEE FLOOR PLAN FOR CIRCUIT SIZE AND NUMBER
2. ALL DEVICES AND EQUIPMENT SUPPLIED BY DOOR SUPPLIER AND INSTALLED BY THIS CONTRACTOR.
3. THE DOOR CLOSING LOOP SHALL BE A PERFORMED LOOP PLACED UNDER THE ASPHALT OR IMBEDDED IN THE CONCRETE (AS APPLICABLE). SAW CUTTING FOR INSTALLATION OF THE CLOSING LOOPS IS NOT ACCEPTABLE.
4. PROVIDE AN OPTION FOR A MANUAL OVERRIDE SWITCH TO ALLOW DOORS TO REMAIN OPEN.

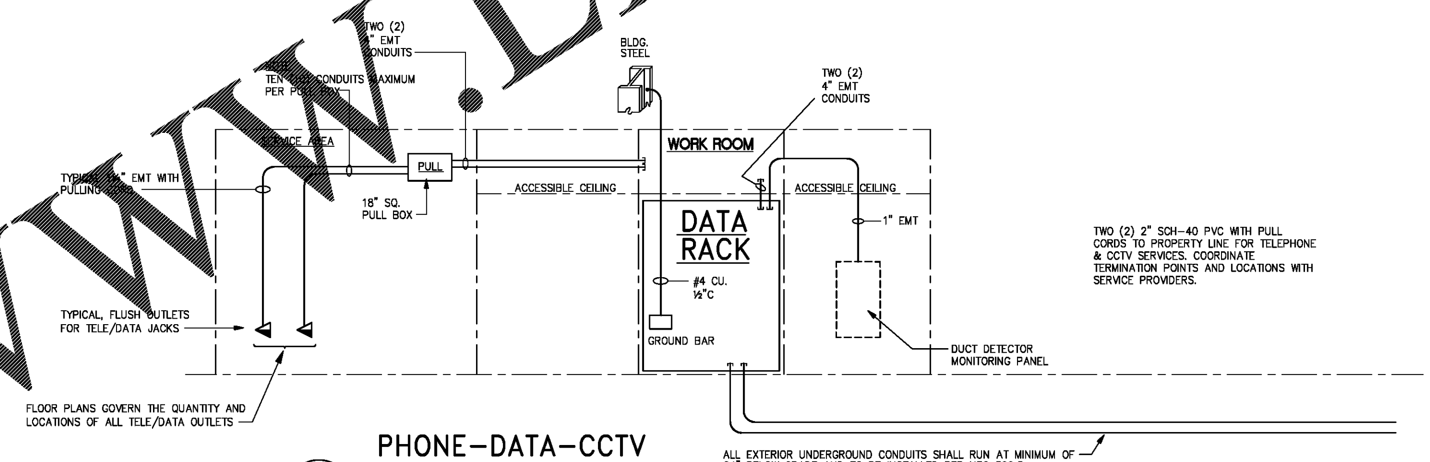

TWO (2) 2" SCH-40 PVC WITH PULL CORDS TO PROPERTY LINE FOR TELEPHONE & CCTV SERVICES. COORDINATE TERMINATION POINTS AND LOCATIONS WITH SERVICE PROVIDERS.

3 PHONE-DATA-CCTV RACEWAY RISER
DIAGRAMMATIC

TVSS SPECIFICATION

1. PROVIDE TRANSIENT VOLTAGE SURGE SUPPRESSION (TVSS) AT THE SERVICE PANEL "MDP", PANEL "SP", PANEL "OP" AND PANEL "TP".
2. TVSS UNITS SHALL BE EQUAL TO THE SQUARE "D" "SURGELOGIC" (EBA) SERIES.
3. ACTIVE RESPONSE NETWORK SHALL PROVIDE EMI AND RFI NOISE FILTERING.
4. UNITS SHALL HAVE FORM-C DRY CONTACTS FOR REMOTE STATUS MONITORING.
5. METAL OXIDE VARISTORS SHALL BE "LARGE DIAMETER" TYPE.
6. THE SURGE SUPPRESSOR AT THE SERVICE SWITCH "MDP" SHALL BE 200 KA PER PHASE, FOR A 120/208 VOLT, 3-PHASE, 4-WIRE SYSTEM, EQUAL TO SQUARE "D" #SSP02EBA20 SERIES, NEMA-3R.
7. THE SURGE SUPPRESSOR AT PANEL "SP" SHALL BE 100KA PER PHASE, FOR A 120/208 VOLT, 3-PHASE, 4-WIRE SYSTEM, EQUAL TO SQUARE "D" #SSP02EBA10 SERIES, NEMA-1.
8. THE SURGE SUPPRESSOR AT PANEL "OP" SHALL BE '100KA PER PHASE, FOR A 120/208 VOLT, 3-PHASE, 4-WIRE SYSTEM, EQUAL TO SQUARE "D" #SSP02EBA10 SERIES, NEMA-1.
9. TVSS SHALL HAVE A TEN (10) YEAR REPLACEMENT WARRANTY.

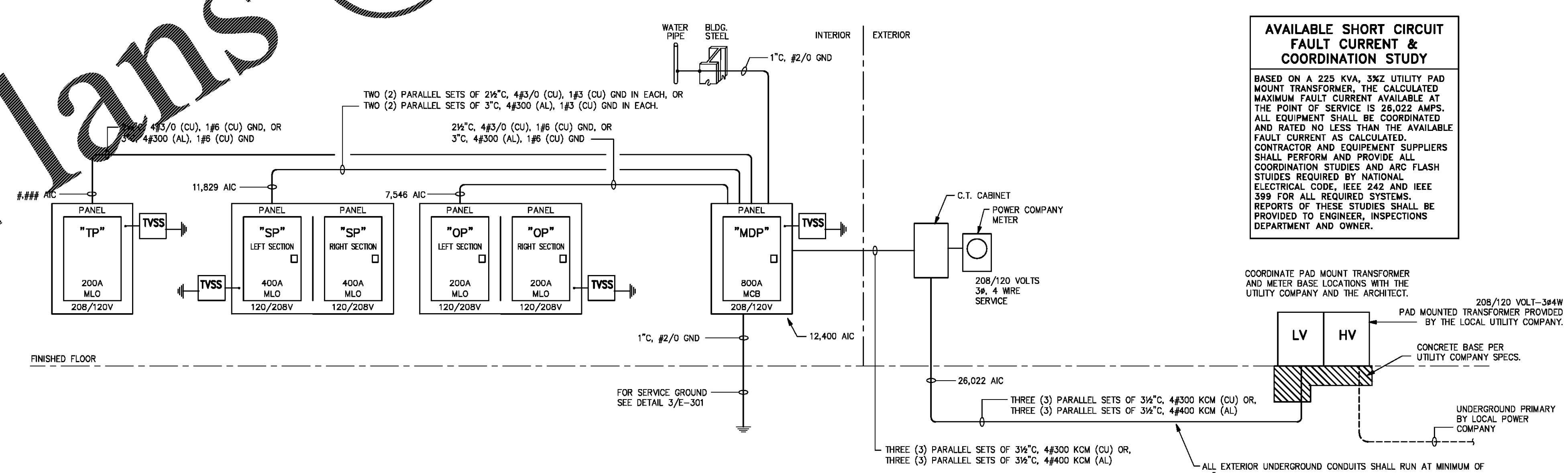

AVAILABLE SHORT CIRCUIT FAULT CURRENT & COORDINATION STUDY

BASED ON A 225 KVA, 3%Z UTILITY PAD MOUNT TRANSFORMER, THE CALCULATED MAXIMUM FAULT CURRENT AVAILABLE AT THE POINT OF SERVICE IS 26,022 AMPS. ALL EQUIPMENT SHALL BE COORDINATED AND RATED NO LESS THAN THE AVAILABLE FAULT CURRENT AS CALCULATED. CONTRACTOR AND EQUIPEMENT SUPPLIERS SHALL PERFORM AND PROVIDE ALL COORDINATION STUDIES AND ARC FLASH STUIDES REQUIRED BY NATIONAL ELECTRICAL CODE, IEEE 242 AND IEEE 399 FOR ALL REQUIRED SYSTEMS. REPORTS OF THESE STUDIES SHALL BE PROVIDED TO ENGINEER, INSPECTIONS DEPARTMENT AND OWNER.

NOTE:
AT THE CONTRACTORS OPTION THE USE OF ALUMINUM FEEDERS, SIZED PER NEC, ARE ALLOWED FOR THE SERVICE FEEDER AND FEEDERS TO SECONDARY PANELS. GROUND WIRE SHALL REMAIN COPPER.

1 POWER RISER DIAGRAM
NOT TO SCALE

TEETER ENGINEERING GROUP, P.A.
RELIABILITY • COLLABORATION • DEDICATION • EXCELLENCE
5500 77 CENTER DRIVE • SUITE 140 • CHARLOTTE, NC 28217
704.376.2999 • WWW.TEGPA.COM • INFO@TEGPA.COM

TEETER ENGINEERING GROUP, PA HEREBY RESERVES ITS COMMON LAW COPYRIGHT AND ALL OTHER PROPERTY RIGHTS TO THESE DOCUMENTS, ANY ASSOCIATED SPECIFICATIONS, DESIGN CONCEPTS, DETAILS, AND IDEAS. THESE DOCUMENTS, SPECS, DESIGN CONCEPTS, DETAILS AND IDEAS SHALL NOT BE REPRODUCED, REVISED, OR COPIED IN WHOLE OR IN PART, NOR SHALL THEY BE DISTRIBUTED TO ANY OTHER PARTIES WITHOUT WRITTEN PERMISSION FROM TEETER ENGINEERING GROUP, PA. ANY ELECTRONIC AND COMPUTER FILES OF THESE DOCUMENTS ARE THE SOLE PROPERTY OF TEETER ENGINEERING GROUP, PA. AND ARE INTENDED FOR ARCHIVE AND RECORD PURPOSES ONLY. COMPUTER FILES SHALL NOT BE COPIED IN WHOLE OR IN PART WITHOUT WRITTEN PERMISSION FROM TEETER ENGINEERING GROUP, PA.

TEETER ENGINEERING GROUP, P.A.
FLORIDA COA # 26380

progressive ae
PROGRESSIVE ARCHITECTURE ENGINEERING, PC
330 South Tryon St. Suite 500 | Charlotte, NC 28202 704.731.8080 www.progressiveae.com

THE AUTO CLUB GROUP
AAA - CAR CARE CENTER
TAMPA, FL 33607
1701 NORTH WESTSHORE BLVD.

This item has been digitally signed and sealed by William Lee Teeter, PE on 06-22-2018 using a Digital Signature.
Printed copies of this document are not considered signed and sealed and the SHA authentication code must be verified on any electronic copies.

If this document is sealed and signed in a digital or electronic format and is received from someone other than the sealing professional identified in the document, you must contact the sealing professional in writing to validate authenticity of the document. The sealing professional disclaims the seal and signature and shall not be liable for any liability associated with it where the authenticity of any digital or electronic seal or signature has not been validated in this manner.

ISSUANCE

REVISIONS
NO. DATE DESCRIPTION

FILE NUMBER	18030
PROJECT MANAGER	
PROFESSIONAL	
DRAWN BY	CLE
CHECKED BY	WLT

SCHEDULES & RISERS

E-301

Order Plans @ WWW.LDIILine.com