DocuSign Envelope ID: 3CDD7E5A-66CF-4876-A06C-042C862DB5F4

PLUMBING FIXTURE SCHEDULE

TAG	FIXTURE TYPE	DESCRIPTION	SERVICE CONNECTIONS SAN	VENT	HW	CW	REMARKS
W-1	WATER CLOSET TANK-TYPE	WATER CLOSET SHALL BE EQUAL TO AMERICAN STANDARD "CADET SUITE" MODEL #270CA.001.020, WHITE, VITREOUS CHINA, ELONGATED BOWL, TANK TYPE, 1.6 GPF, FLOOR MOUNTED, BOTTOM OUTLET, 12" ROUGH-IN. SEAT SHALL BE EQUAL TO CHURCH MODEL #9500SSCT, ELONGATED WHITE OPEN FRONT SEAT LESS COVER. WATER CLOSET SHALL BE PROVIDED WITH CHROME PLATED SUPPLY WITH LOOSE KEY STOP EQUAL TO McGUIRE #172.	3"	2"	–	1/2"	FIXTURE RIM TO FINISHED FLOOR MOUNTING HEIGHT SHALL BE 15".
W-1a	BARRIER-FREE WATER CLOSET TANK-TYPE	WATER CLOSET SHALL BE EQUAL TO AMERICAN STANDARD "CADET PRO" MODEL #215AA.104.020, WHITE, VITREOUS CHINA, ELONGATED BOWL, TANK TYPE, 1.6 GPF, FLOOR MOUNTED, BOTTOM OUTLET, 12" ROUGH-IN. SEAT SHALL BE EQUAL TO CHURCH MODEL #9500SSCT, ELONGATED WHITE OPEN FRONT SEAT LESS COVER. WATER CLOSET SHALL BE PROVIDED WITH CHROME PLATED SUPPLY WITH LOOSE KEY STOP EQUAL TO McGUIRE #172.	3"	2"	–	1/2"	FIXTURE RIM TO FINISHED FLOOR MOUNTING HEIGHT SHALL BE 17". LOCATE FLUSH LEVER ON WIDE SIDE OF STALL.
U-1	BARRIER-FREE URINAL FLUSH VALVE	URINAL SHALL BE EQUAL TO AMERICAN STANDARD "ALLBROOK" MODEL #6541.132, WHITE, VITREOUS CHINA, 1.0 GPF, WALL MOUNTED. URINAL SHALL BE MOUNTED USING A HANGER PLATE CARRIER. FLUSH VALVE SHALL BE EQUAL TO SLOAN REGAL #186-1.0.	2"	1 1/2"	–	3/4"	FIXTURE RIM TO FINISHED FLOOR MOUNTING HEIGHT SHALL BE 17".
L-1	BARRIER-FREE LAVATORY COUNTER TOP	LAVATORY SHALL BE EQUAL TO AMERICAN STANDARD "AQUALYN" MODEL #0475.020.020, VITREOUS CHINA, COUNTER TOP. PROVIDE FAUCET EQUAL TO DELTA MODEL #21C134 CENTERSET FAUCET WITH LEVER HANDLES & MIX-60-A MIXING VALVE. PROVIDE LAVATORY COMPLETE WITH GRID DRAIN, PREWRAPPED INSULATED, SEMI-CAST BRASS, OFFSET TAILPIECE AND P-TRAP WITH CLEANOUT (EQUAL TO McGUIRE #PW2150WC) AND CHROME PLATED SUPPLIES (EQUAL TO McGUIRE #175).	2"	1 1/2"	1/2"	1/2"	PROVIDE LAVATORY WITH ASEE 1070 MIXING VALVE WITH DELIVERY TEMPERATURE SET TO 110°F.
L-2	BARRIER-FREE LAVATORY WALL HUNG	LAVATORY SHALL BE EQUAL TO AMERICAN STANDARD "LUCERNE" MODEL #0355.012.020, VITREOUS CHINA, WALL HUNG. PROVIDE FAUCET EQUAL TO DELTA MODEL #2523-HDF CENTERSET FAUCET WITH LEVER HANDLES & #MIX-60-A MIXING VALVE. PROVIDE LAVATORY COMPLETE WITH GRID DRAIN, PREWRAPPED INSULATED, CAST BRASS, OFFSET TAILPIECE AND P-TRAP WITH CLEANOUT (EQUAL TO McGUIRE #PW2150WC) AND CHROME PLATED SUPPLIES (EQUAL TO McGUIRE #175).	2"	1 1/2"	1/2"	1/2"	FIXTURE RIM TO FINISHED FLOOR MOUNTING HEIGHT SHALL BE 34". PROVIDE LAVATORY WITH ASEE 1070 MIXING VALVE WITH DELIVERY TEMPERATURE SET TO 110°F.
BS-1	BARRIER-FREE BREAK ROOM DOUBLE-BOWL SINK	SINK SHALL BE EQUAL TO ELKAY MODEL #D-22519, DOUBLE BOWL, FOUR HOLE PUNCHING, 18 GAUGE TYPE 304 STAINLESS STEEL. PROVIDE FAUCET EQUAL TO DELTA MODEL #400LF-HDF, 8" CENTERS, SINGLE LEVER HANDLE, VANDAL RESISTANT AERATOR, AND SPRAY ASSEMBLY. PROVIDE SINK COMPLETE WITH TWO STAINLESS STEEL BASKET STRAINERS (EQUAL TO MCGUIRE #151A), OFFSET TAILPIECE AND SEMI-CAST BRASS P-TRAP WITH CLEANOUT (EQUAL TO McGUIRE #8902C) AND CHROME PLATED SUPPLIES WITH LOOSE KEY STOPS (EQUAL TO McGUIRE #175LK).	2"	1 1/2"	1/2"	1/2"	
HS-1	LARGE HAND SINK	LARGE HAND SINK SHALL BE EQUAL TO ELKAY MODEL #ESSW2520C, STAINLESS STEEL, WALL HUNG. PROVIDE FLOOR MOUNTED FOOT PEDAL VALVE EQUAL TO ELKAY MODEL #LK399A AND BACK MOUNT CHROME SPOUT EQUAL TO ELKAY MODEL #LK395A. PROVIDE SINK COMPLETE WITH CHROME PLATED SEMI-CAST BRASS P-TRAP (EQUAL TO McGUIRE #8902) AND CHROME PLATED SUPPLIES WITH LOOSE KEY STOPS (EQUAL TO McGUIRE #175LK).	2"	1 1/2"	1/2"	1/2"	
MS-1	MOP SINK	SINK SHALL BE EQUAL TO FLORESTONE MODEL #90, 24"x24"x10", PRECAST TERRAZZO WITH 6" DROP FRONT. PROVIDE FAUCET EQUAL TO DELTA MODEL #28T9, INTEGRAL STOPS, VACUUM BREAKER, PAIL HOOK, THREADED SPOUT, AND LEVER HANDLES. PROVIDE SINK COMPLETE WITH MOP HANGER, HOSE WITH BRACKET, AND P-TRAP.	3"	1 1/2"	3/4"	3/4"	PROVIDE CHECK VALVE STOPS ON HW & CW SUPPLIES WITH ACCESS DOOR ABOVE FAUCET.
C-1	BARRIER-FREE BI-LEVEL ELECTRIC WATER COOLER	ELECTRIC WATER COOLER SHALL BE EQUAL TO ELKAY MODEL #LZSTL8C, BI-LEVEL, STAINLESS STEEL. PROVIDE WATER COOLER COMPLETE WITH ANGLE SUPPLY LOOSE KEY STOP (EQUAL TO McGUIRE #175LK), P-TRAP (EQUAL TO McGUIRE #8902), AND CARRIER.	2"	1 1/2"	–	1/2"	
ES-1	EMERGENCY SHOWER/ EYE WASH	EMERGENCY SHOWER/EYE WASH SHALL BE EQUAL TO BRADLEY MODEL #S19-310DC, FLOOR MOUNT. ROUTE 1¼" TEMPERED WATER FROM MIXING VALVE TO EYEWASH/SHOWER.	2"	1 1/2"	1 1/4"	1 1/4"	SEE MIXING VALVE SCHEDULE
IMB	ICE MACHINE BOX	ICE MACHINE BOX SHALL BE EQUAL TO GUY GRAY MODEL #BIM-875.	–	–	–	1/2"	W/ VACCUM BREAKER
SB	SUPPLY BOX	SUPPLY BOX SHALL BE EQUAL TO GUY GRAY MODEL #MIB1AB, WHITE POWDER COAT W/ VACUUM BREAKER..	–	–	–	1/2"	PROVIDED W/ WATTS SD-3 BACKFLOW PREVENTER
FPH	WALL HYDRANT	FREEZE PROOF HYDRANT SHALL BE EQUAL TO WOODFORD MODEL #65.	–	–	–	1/2"	W/VACUUM BREAKER W/GATE VALVE
HB	HOSE BIBB	HOSE BIBB SHALL BE EQUAL TO WOODFORD MODEL #24.	–	–	–	1/2"	PROVIDE WITH METAL HANDLE
AAV	AIR ADMITTANCE VALVE	AIR ADMITTANCE VALVE SHALL BE EQUAL TO STUDOR VENT MODEL #MAXI-VENT OR EQUAL.	SEE DWGS.	–	–	–	
HD	HUB DRAIN	HUB DRAIN SHALL BE EQUAL TO ZURN MODEL #ZN-415 WITH TYPE "I" STRAINER, P-TRAP W/TRAP PRIMER	SEE DWGS.	–	–	–	/W TRAP PRIMER
FD	FLOOR DRAIN	FLOOR DRAIN SHALL BE EQUAL TO ZURN MODEL #ZN-415 TYPE S STRAINER, DEEP SEAL P-TRAP & ZURN MODLE #Z1022 AUTOMATIC TRAP PRIMER	SEE DWGS.	–	–	–	PROVIDE TRAP PRIMER CONNECTION AS REQUIRED.
RD/ORD	COMBO ROOF DRAIN/ OVERFLOW DRAIN	ROOF/OVERFLOW DRAIN SHALL BE EQUAL TO ZURN MODEL #RD2130, CAST IRON BODY, FLASHING CLAMP, GRAVEL, STOP, TOP-SET DECK PLATE, UNDERDECK CLAMP, DECK EXTENSION AS REQUIRED AND CAST IRON DOME.	SEE DWGS.	–	–	–	FIELD VERIFY EXTENSION HEIGHT
DC	DOWNSPOUT COVER	DOWNSPOUT COVER SHALL BE EQUAL TO ZURN MODEL #Z-199.	SEE DWGS.	–	–	–	CHROME PLATED
CB-1	CATCH BASIN	CATCH BASIN DRAIN SHALL BE ACO SERIES KS1-0303, 5"x20"x11"'D, WITH CLASS C #465Q PERFORATED STAINLESS STEEL GRATE. PROVIDE WITH BOTTOM OUTLET, END CAPS & DEEP SEAL P-TRAP.	SEE DWGS.	–	–	–	PROVIDE WITH FOUL AIR TRAP
FCO	FLOOR CLEANOUT	FLOOR CLEANOUT SHALL BE EQUAL TO ZURN MODEL #ZN-1400. CLEANOUT.	SEE DWGS.	–	–	–	GAS/WATER TIGHT ABS PLUG
WCO	WALL CLEANOUT	WALL CLEANOUT SHALL BE EQUAL TO ZURN MODEL #ZN-1468, ACCESS COVER AND PLUG.	SEE DWGS.	–	–	–	GAS/WATER TIGHT ABS PLUG
GCO	CLEANOUT TO GRADE	CLEANOUT TO GRADE SHALL BE EQUAL TO ZURN MODEL #Z-1400. PROVIDE CLEANOUT IN 18"x18"x6" CONCRETE PAD.	SEE DWGS.	–	–	–	GAS/WATER TIGHT ABS PLUG

GAS WATER HEATER SCHEDULE

TAG	DESCRIPTION	GAS BURNER DATA: GAS TYPE N	P	INLET PRESSURE	GALLONS STORAGE	MBH INPUT	RECOVERY GPH/RISE	UNIT TOTAL	RECOVERY GPH TOTAL	FLUE SIZE TYPE	SELECTION BASED ON: MANUFACTURER	MODEL NUMBER	REMARKS/OPTIONS
WH-1	KITCHEN	X		7" WC	75	100	129/90°	1	129	3"PVC	STATE	GP6-75	NOTE 1, A,B,D

OPTIONS (ALL UNITS)
- CODE APPROVED VACUUM BREAKER, TEMPERATURE/PRESSURE RELIEF VALVE AND INTERGAL OR FIELD SUPPLIED HEAT TRAPS.
- THERMAL EXPANSION TANK ON CW MAKE-UP. SEE TANK SCHEDULE.
- SERVICE BALL VALVES ON HW/CW MAINS

ADDITIONAL OPTIONS (UNITS AS NOTED)
A: CONCENTRIC VENT KIT FOR EACH HEATER. INSTALL PER MANUFACTURER'S REQUIREMENTS.
B: PROVIDE CONDENSATE NEUTRALIZATION KIT ON CONDENSATE DISCHARGE LINE.
C: ELECTRONIC IGNITION CONTROLS (120/1ø/60). COORDINATE WITH E.C
D: POWERED EXHAUST/ELECTRONIC IGNITION (120V/1ø/60) COORDINATE WITH E.C.

NOTES:
1. INSTALL WATER HEATER PER MANUFACTURERS REQUIREMENTS. COORDINATE ALL CONNECTION POINTS IN THE FIELD.

EXPANSION TANK SCHEDULE

TAG	DESCRIPTION	VOLUME (GALLONS)	DIAMETER (INCHES)	HEIGHT (INCHES)	SELECTION BASED ON: MANUFACTURER	MODEL NUMBER	REMARKS
ET-1	BLADDER TYPE	2.0	8"	12 1/2"	AMTROL	ST-5	NOTE 1

NOTES:
1. INSTALL EXPANSION TANK ON IN-COMING COLD WATER PER MANUFACTURERS REQUIREMENTS.

MIXING VALVE SCHEDULE

TAG	DESCRIPTION	MAXIMUM GPM	MINIMUM GPM	PRESSURE LOSS	SELECTION BASED ON: MANUFACTURER	MODEL NUMBER	REMARKS/OPTIONS
MV-1	THERMOSTATIC MIXING VALVE	21	5	15	BRADLEY	TMV-45	NOTE 1, B

OPTIONS (ALL UNITS)
- LEAD FREE NSF APPROVED
- PROVIDE T'STAT ON TEMPERED LINE

ADDITIONAL OPTIONS (UNITS AS NOTED)
A: ASSE 1017 APPROVED, HW HEAT TRAP, RECIRCULATION BY-PASS, BALANCING VALVE
B: ASSE 1071 APPROVED, SET @ 70° F. 1¼" INLETS/OUTLETS, MOUNT 8'0" AFF

NOTES:
1. INSTALL MIXING VALVE PER MANUFACTURERS REQUIREMENTS. PROVIDE ALL PIPING AND VALVES PER O&M MANUAL.

PUMP SCHEDULE

TAG	DESCRIPTION	TYPE	CAPACITY: GPM	HEAD (ft.)	ELECTRICAL DATA: HP	V	PH	HZ	SELECTION BASED ON: MANUFACTURER	MODEL NUMBER	REMARKS/OPTIONS
RCP-1	HOT WATER RECIRC. PUMP	IN-LINE	2.5	9	1/12	120	1	60	BELL & GOSSETT	PL-30-B	NOTE 1,2

OPTIONS (ALL RCP UNITS)
- AQUA-STAT & NIGHT TIMER
- FLANGED PUMP
- BALANCING VALVE & CHECK VALVE
- MAINTENANCE BALL VALVES ON BOTH SIDES OF PUMP

ADDITIONAL OPTIONS (UNITS AS NOTED)

NOTES:
1. SET AQUA-STAT WITH SET POINT 10 DEGREES BELOW SYSTEM SUPPLY TEMP.
2. INSTALL RECIRCULATION PUMP PER MANUFACTURERS REQUIREMENTS.

INTERCEPTOR SCHEDULE

TAG	DESCRIPTION	INLET/ OUTLET SIZE (INCHES)	FLOW RATE (GPM)	CAPACITY: WATER (GAL)	GREASE (LBS)	SOLIDS (CU/FT)	OIL (GAL)	SELECTION BASED ON: MANUFACTURER	MODEL NUMBER	REMARKS/OPTIONS
OWS-1	OIL WATER INTERCEPTOR	4	33	1000	–	125	782	PROCEPTOR	OMC 1000 UPC	NOTE 1,2, A,B,C

OPTIONS (ALL UNITS)
- DISCHARGE BACKWATER VALVE IN SEPARATE VALVE BOX
-

ADDITIONAL OPTIONS (UNITS AS NOTED)
A: NEMA 4X ALARM PANEL, SEE NOTE #2, SINGLE POINT ELECTRICAL CONNECTION
B: PROVIDE A.A.S.H.T.I. H-20 TRAFFIC RATED RELIEVING SLAB PER MANUFACTURERS REQUIREMENTS.
C: SHALL BE IAMPO/UPC 1000 UPC PER PUBLIC UTILITIES REQUIREMENTS.

NOTES:
1. INSTALL PUMP PACKAGE PER MANUFACTURERS REQUIREMENTS. COORDINATE ALL CONNECTION POINTS IN THE FIELD.
2. PROVIDE AUDIBLE AND VISUAL ALARM SYSTEM EQUAL TO STRIEM SINGLE LEVEL "AVA-3" THAT INDICATES HIGH WATER LEVEL (VISUAL ONLY) AND HIGH-HIGH WATER LEVEL (AUDIBLE AND VISUAL) OF WATER LEVEL IN BASIN. A SILENCE CONTROL SHALL BE PROVIDED FOR THE AUDIBLE ALARMS. LEVEL SENSOR(S) TO BE INTRINSICALLY SAFE. LEVEL SENSOR FLOATS TO BE MADE OF STAINLESS STEEL. THE CONTROL PANEL SHALL BE NEMA 4. POWER TO THE CONTROL PANEL IS TO BE [120] VOLT, [1] PHASE BY E.C. CONTROL/POWER WIRING FROM PANEL TO PUMP PROVIDED BY P.C. AND INSTALLED BY E.C.

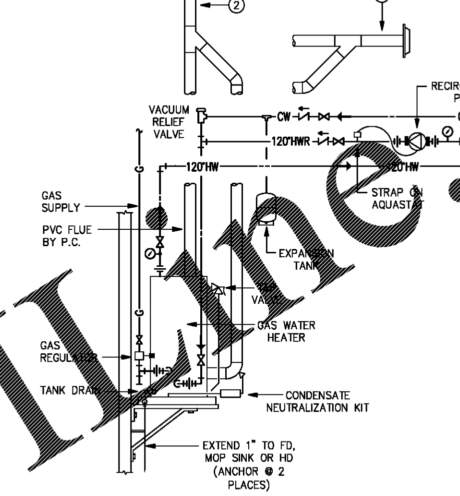

1 GAS WATER HEATER
SCALE: NONE

NOTES:
1. DRAWINGS FOR SCHEMATIC PURPOSES ONLY. ALL VALVES & EQUIPMENT MUST BE INSTALLED PER MANUFACTURERS INSTRUCTIONS.
2. SEE PLANS FOR CONCENTRIC VENT LOCATION.

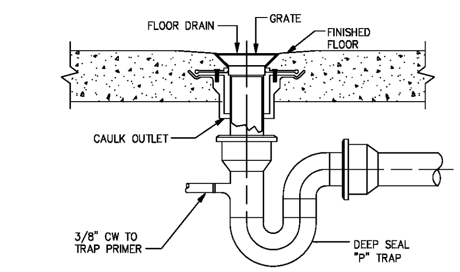

2 TYPICAL FLOOR DRAIN DETAIL
SCALE: NONE

NOTE:
P.C. SHALL PROVIDE 3/8" TRAP PRIMER AT ALL FLOOR DRAINS. PRIMER = ZURN MODEL #Z1022 OR APPROVED EQUAL.

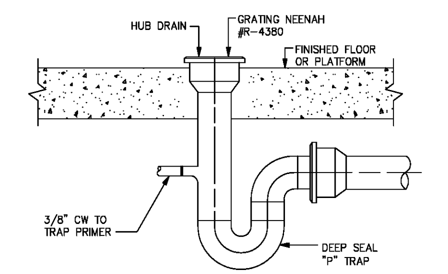

3 TYPICAL HUB DRAIN DETAIL
SCALE: NONE

NOTE:
P.C. SHALL PROVIDE 3/8" TRAP PRIMERS AT DRAINS NOT WASHED BY A HOSE BIBB. TRAP PRIMER = ZURN MODEL Z-1022 OR APPROVED EQUAL.

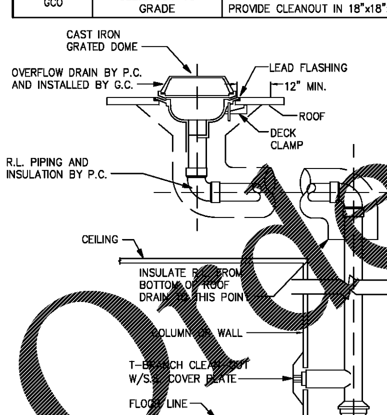

2 ROOF DRAIN DETAIL
SCALE: NONE

NOTE:
FIELD VERIFY EXTENSION HEIGHT REQUIRED PRIOR TO ORDERING AND INSTALLING ROOF DRAIN(S).

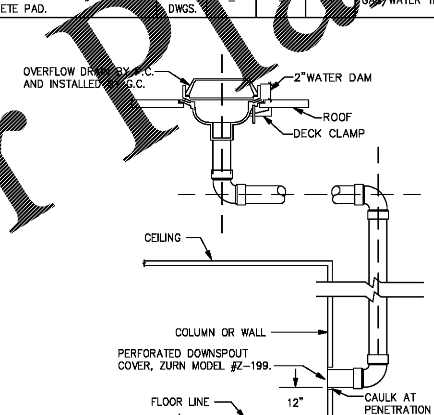

3 OVERFLOW DRAIN DETAIL
SCALE: NONE

NOTE:
FIELD VERIFY EXTENSION HEIGHT REQUIRED PRIOR TO ORDERING AND INSTALLING ROOF DRAIN(S).

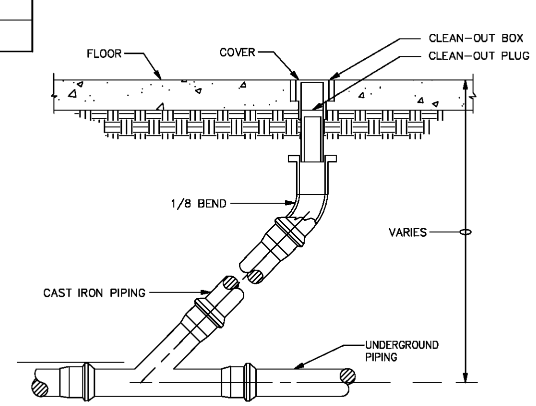

6 FLOOR CLEAN-OUT DETAIL
SCALE: NONE

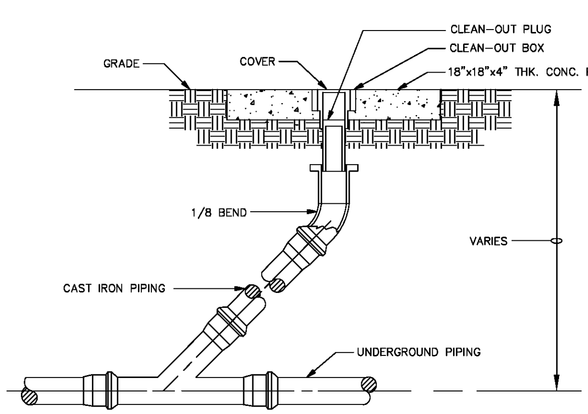

5 GRADE CLEAN-OUT DETAIL
SCALE: NONE

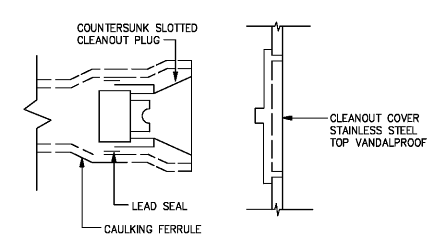

4 WALL CLEAN-OUT DETAIL
SCALE: NONE

NOTE:
GENERAL CONTRACTOR SHALL COORDINATE WALL CLEANOUT INSTALLATION REQUIREMENTS WITH MILLWORK CONTRACTOR PRIOR TO ROUGH-IN.

TEETER ENGINEERING GROUP, P.A.
RELIABILITY • COLLABORATION • DEDICATION • EXCELLENCE
5500 77 CENTER DRIVE • SUITE 140 • CHARLOTTE, NC 28217
704.376.2999 • WWW.TEGPA.COM • INFO@TEGPA.COM

TEETER ENGINEERING GROUP, PA HEREBY RESERVES ITS COMMON LAW COPYRIGHT AND ALL OTHER PROPERTY RIGHTS TO THESE DOCUMENTS, ANY ASSOCIATED SPECIFICATIONS, DESIGN CONCEPTS, DETAILS, AND IDEAS. THESE DOCUMENTS, SPECS, DESIGN CONCEPTS, DETAILS, AND IDEAS SHALL NOT BE REPRODUCED, REVISED, OR COPIED IN WHOLE OR IN PART, NOR SHALL THEY BE DISTRIBUTED TO ANY OTHER PARTIES WITHOUT WRITTEN PERMISSION FROM TEETER ENGINEERING GROUP, PA. ANY ELECTRONIC AND COMPUTER FILES OF THESE DOCUMENTS ARE SOLE PROPERTY OF TEETER ENGINEERING GROUP, PA. AND ARE INTENDED FOR ARCHIVE AND RECORD PURPOSES ONLY. COMPUTER FILES SHALL NOT BE COPIED IN WHOLE OR IN PART WITHOUT WRITTEN PERMISSION FROM TEETER ENGINEERING GROUP, P.A.

TEETER ENGINEERING GROUP, P.A.
FLORIDA COA # 26380

progressive ae
PROGRESSIVE ARCHITECTURE ENGINEERING, PC
330 South Tyron St. Suite 500| Charlotte, NC 28202 704.731.8080 www.progressiveae.com

THE AUTO CLUB GROUP
AAA - CAR CARE CENTER
TAMPA, FL 33607
1701 NORTH WESTSHORE BLVD.

This item has been digitally signed and sealed by M. Michael Schon, PE on 06-22-2018 using a Digital Signature.
Printed copies of this document are not considered signed and sealed and the SHA authentication code must be verified on any electronic copies.

If this document is sealed and signed in a digital or electronic format and is received from someone other than the sealing professional identified in the document, you must contact the sealing professional in writing to validate authenticity of the document. The sealing professional disclaims the seal and signature and shall not be liable for any liability associated with it where the authenticity of any digital or electronic seal or signature has not been validated in this manner.

ISSUANCE

REVISIONS
NO. DATE DESCRIPTION

FILE NUMBER	18030
PROJECT MANAGER	
PROFESSIONAL	
DRAWN BY	CLS
CHECKED BY	MMS

SCHEDULES & DETAILS

P-002

Order Plans @ www.LDILine.com