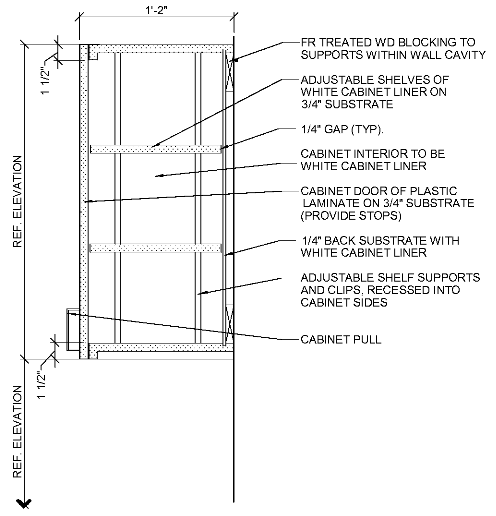

C1 DETAIL @ OVERHEAD CABINET, TYP.
SCALE: 1 1/2" = 1'-0"

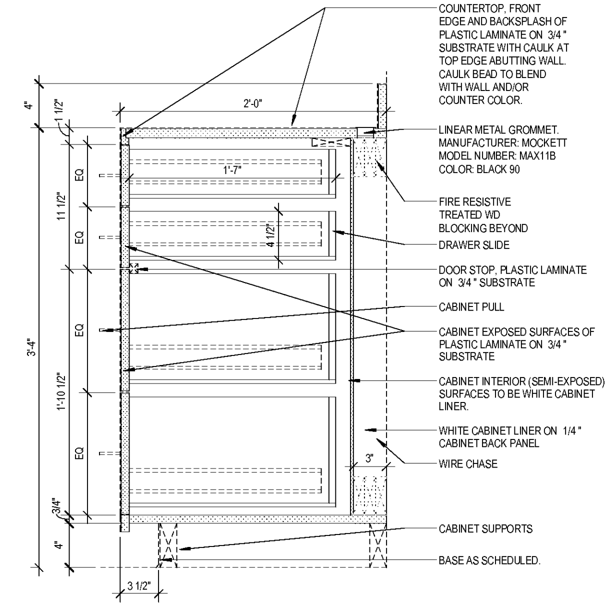

C2 DETAIL @ BASE CABINET, WIRE CHASE
SCALE: 1 1/2" = 1'-0"

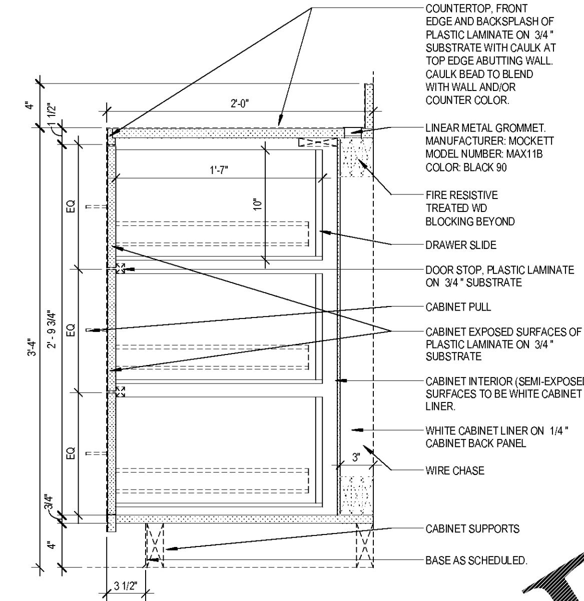

C3 DETAIL @ BASE CABINET W/ DRAWERS, WIRE CHASE
SCALE: 1 1/2" = 1'-0"

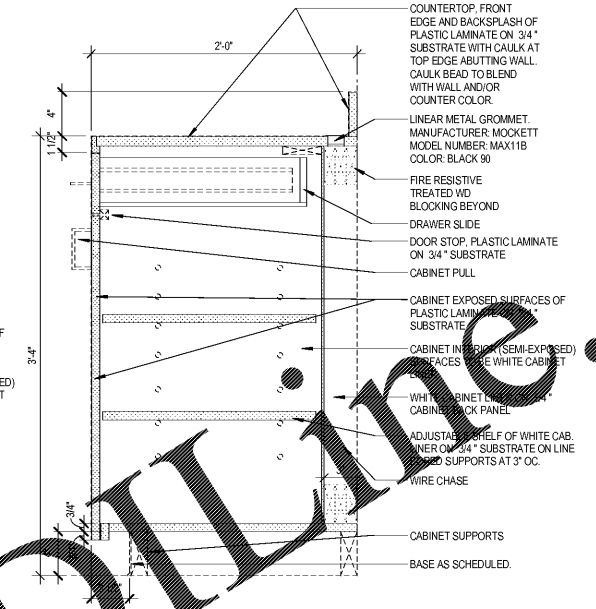

C4 DETAIL @ BASE CABINET, W/ DRAWER, WIRE CHASE
SCALE: 1 1/2" = 1'-0"

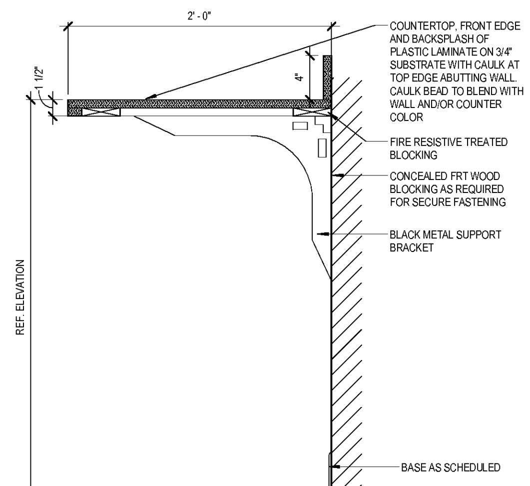

B1 DETAIL @ COUNTER ONLY
SCALE: 1 1/2" = 1'-0"

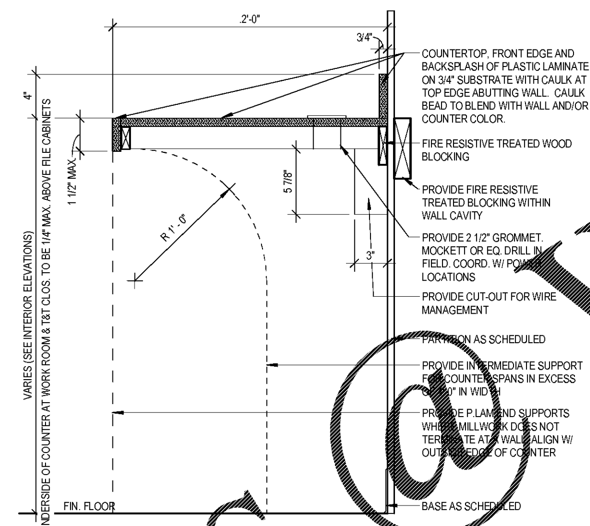

B2 DETAIL @ COUNTER ONLY
SCALE: 1 1/2" = 1'-0"

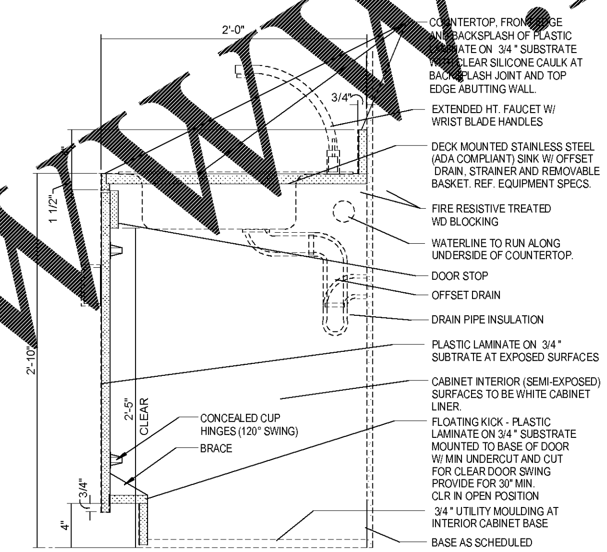

B3 DETAIL @ BASE CABINET, SINK
SCALE: 1 1/2" = 1'-0"

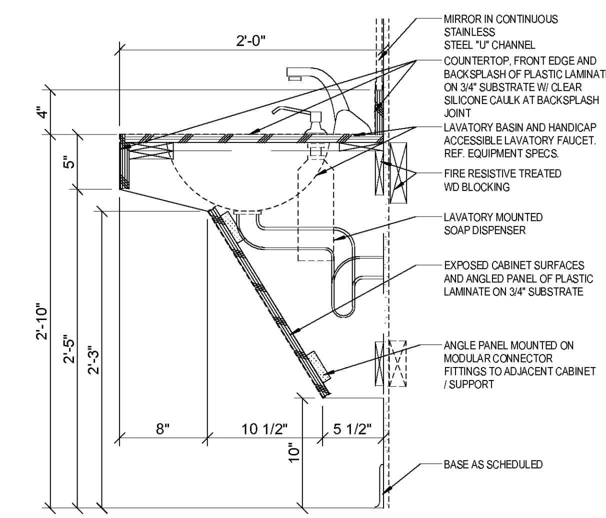

B5 SECTION @ LAVATORY CABINET
SCALE: 1 1/2" = 1'-0"

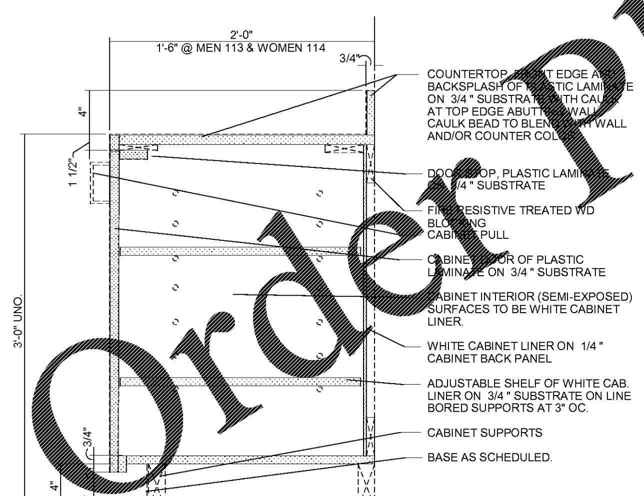

A1 DETAIL @ BASE CABINET, NO DRAWER
SCALE: 1 1/2" = 1'-0"

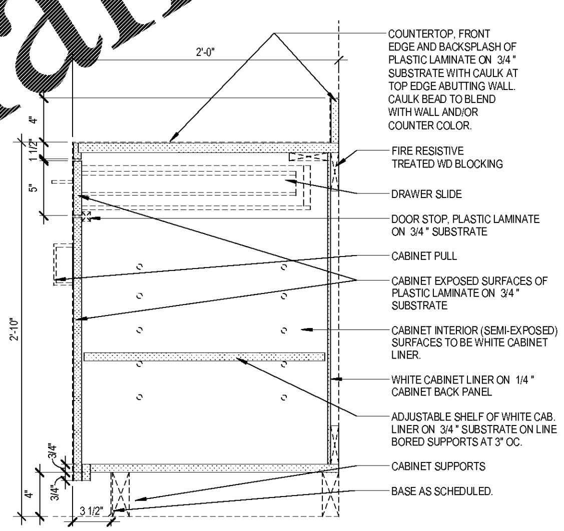

A2 DETAIL @ BASE CABINET, W/ DRAWER
SCALE: 1 1/2" = 1'-0"

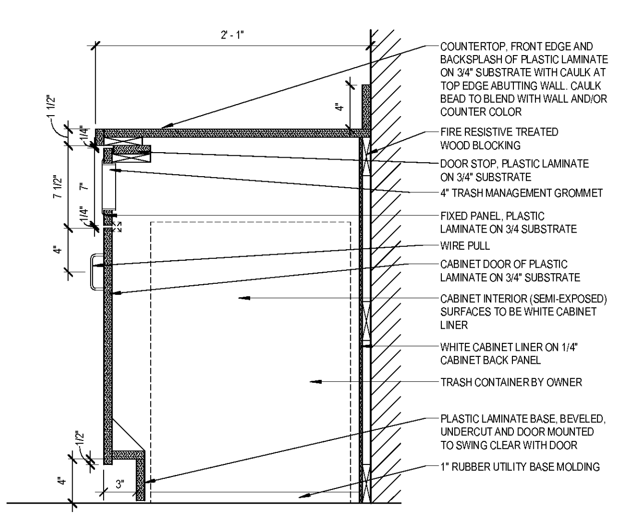

A3 DETAIL @ BASE CABINET, TRASH RECEPTACLE
SCALE: 1 1/2" = 1'-0"

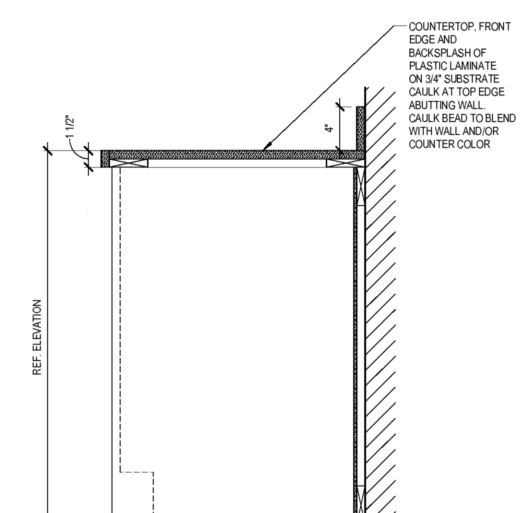

A5 DETAIL @ BASE CABINET, EQUIP.
SCALE: 1 1/2" = 1'-0"

Order Plans @ www.LDILine.com

THIS DOCUMENT HAS BEEN PREPARED BY PAEP PC AS AN INSTRUMENT OF SERVICE, AND PAEP PC SHALL RETAIN ALL COMMON LAW, STATUTORY AND OTHER RESERVED RIGHTS, INCLUDING THE COPYRIGHT THERETO.

6/22/2018 10:31:52 AM
D:\Revit Local Files\2016\79890009.0 - Westshore - CENTRAL 2016_crookr.rvt

progressive | ae
PROGRESSIVE ARCHITECTURE ENGINEERING, PC
330 South Tryon St. Suite 500 | Charlotte, NC 28202 | 704 731 8080 | www.progressiveae.com

THE AUTO CLUB GROUP
AAA - CAR CARE CENTER
TAMPA, FL 33607
1701 NORTH WESTSHORE BLVD.

ISSUANCE

REVISIONS
NO. DATE DESCRIPTION

FILE NUMBER	79890009
PROJECT MANAGER	
PROFESSIONAL	
DRAWN BY	Author
CHECKED BY	Checker

MILLWORK DETAILS

A-251