NOTES:
1. METAL POST TO BE GALVANIZED. ALL BOLTS, NUTS, WASHERS AND SCREWS MUST BE RUSTPROOF.
2. CONCRETE FOR FOOTING SHALL BE PORTLAND CEMENT AND HAVE A MINIMUM COMPRESSIVE STRENGTH OF 3,000 P.S.I.
3. SIGNS WILL BE FABRICATED BY USING REFLECTING COATING IN THE SYMBOL, MESSAGE AND BORDER APPLIED TO A SHEET ALUMINUM BACKING (.080) IN THICKNESS.
4. MESSAGE LETTERING SHALL BE UPPER CASE (BLACK)(SERIES C) 1.5" HIGH IN ACCORDANCE WITH MANUAL ON UNIFORM TRAFFIC CONTROL DEVICES, EXCEPT AS NOTED ON SHEET 2 OF 2.
5. THE SYMBOL IS COMPOSED OF TWO ELEMENTS, A WHITE WHEELCHAIR FIGURE (WHICH SHOULD ALWAYS FACE RIGHT) ON A SQUARE BACKGROUND, INTERNATIONAL BLUE IN COLOR (FED. STD. 595c, COLOR #15180).
6. SIGN POST SHALL BE MIN. 2'-0" CLEAR FROM BACK OF CURB.
7. THE USE OF PROPERLY LOCATED BOLLARDS IN ACCESSIBLE PARKING SPACES ARE ACCEPTABLE SUBSTITUTES FOR REGULAR BUMPER GUARD.
8. MINIMUM NUMBER OF ACCESSIBLE PARKING SPACES SHALL BE PER FLORIDA ACCESSIBILITY BUILDING CODE SECTION 4.6.3.

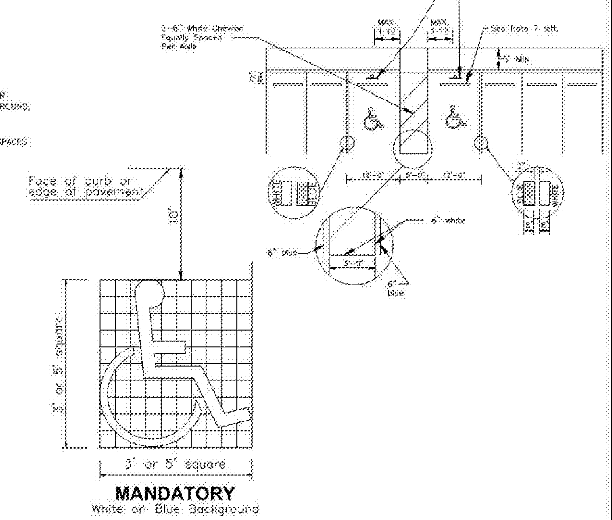

REVISION DATE: 12/08	TRANSPORTATION TECHNICAL MANUAL	Hillsborough County Florida	DISABLED PARKING / PAVEMENT MARKING TYPICAL DETAILS	DRAWING NO. TD-1 / SHEET NO. 1 OF 2

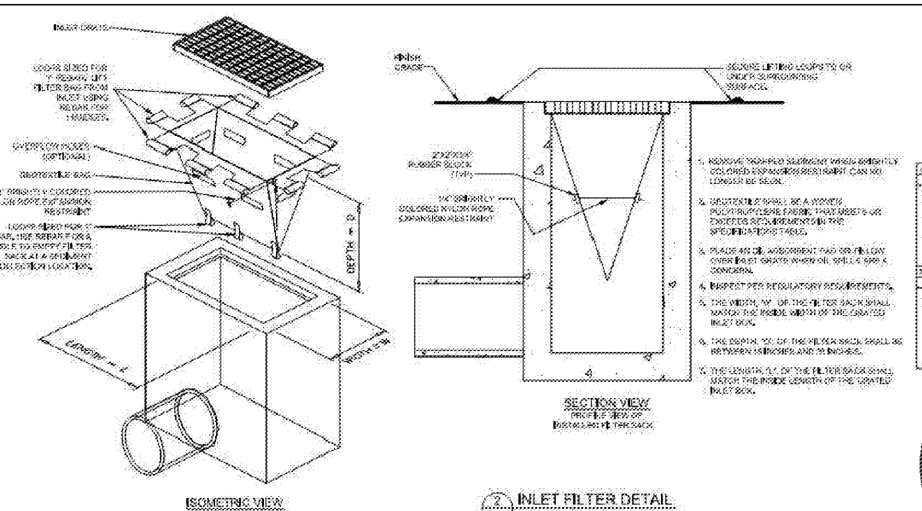

2 INLET FILTER DETAIL
NOT TO SCALE

1. REMOVE TRAPPED SEDIMENT WHEN BRIGHTLY COLORED EXPANSION RESTRAINT CAN NO LONGER BE SEEN.
2. GEOTEXTILE SHALL BE A WOVEN POLYPROPYLENE FABRIC THAT MEETS OR EXCEEDS REQUIREMENTS IN THE SPECIFICATIONS TABLE.
3. PLACE AN OIL ABSORBENT PAD OR PILLOW OVER INLET GRATE WHEN OIL SPILLS ARE A CONCERN.
4. INSPECT PER REGULATORY REQUIREMENTS.
5. THE WIDTH, "W" OF THE FILTER SACK SHALL MATCH THE INSIDE WIDTH OF THE GRATED INLET BOX.
6. THE DEPTH, "D" OF THE FILTER SACK SHALL BE BETWEEN 18 INCHES AND 36 INCHES.
7. THE LENGTH, "L" OF THE FILTER SACK SHALL MATCH THE INSIDE LENGTH OF THE GRATED INLET BOX.

LOW TO MODERATE FLOW GEOTEXTILE FABRIC SPECIFICATION TABLE		
PROPERTIES	TEST METHOD	UNITS
[illegible]	[illegible]	[illegible]

MODERATE TO HIGH FLOW GEOTEXTILE FABRIC SPECIFICATION TABLE		
PROPERTIES	TEST METHOD	UNITS
[illegible]	[illegible]	[illegible]

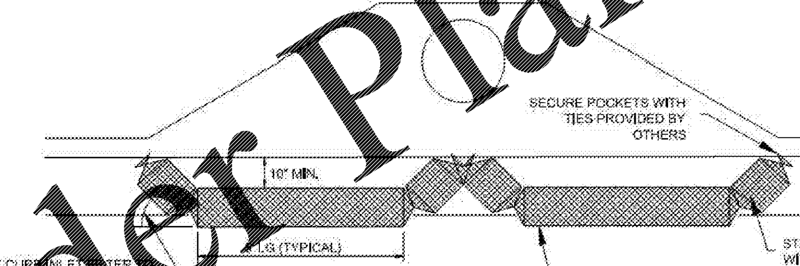

NOTE: ILLUSTRATED APPLICATION REQUIRED TWO (2) SS-300 CURB INLET FILTERS

INSTALLATION PROCEDURE:
1. IDENTIFY OPENING DIMENSIONS TO DETERMINE THE NUMBER OF SS-300 CURB INLET FILTERS THAT WILL BE REQUIRED.
2. COMPLETELY FILL THE STABILIZATION CHAMBER ON EACH END OF EACH SS-300 CURB INLET FILTER WITH #57 CRUSHED STONE.
3. SECURE ENDS OF THE STAVILIZATION POCKETS WITH TIES TO BE PROVIDED BY OTHERS.
4. PLACE THE SS-300 CURB INLET FILTER(S) IN FRONT OF THE CURB INLET OR OPENING TO PREVENT THE MIGRATION OF SILT INTO THE STORM DRAIN SYSTEM.

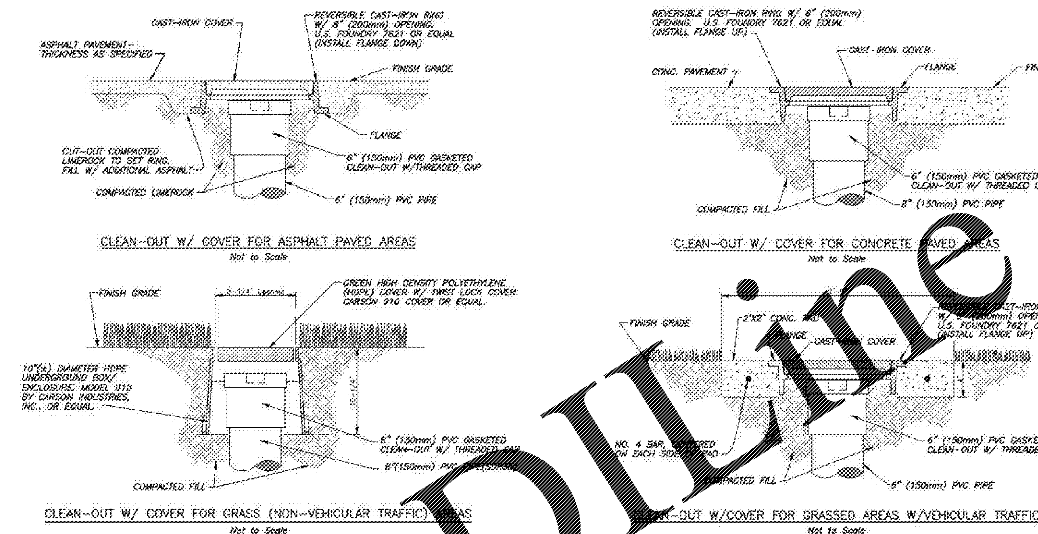

NOTES:
1. Contractor shall adjust the clean-out and cast iron ring and cover or HDPE box and cover so that the cover is seated securely and the top of the cover is flush with the finish grade. The PVC cap of the clean-out shall be no more than 4 inches deeper than the finish grade.
2. PVC cap may be provided with recessed nut.
3. Cast iron cover shall be provided with an embossed letter "S" for identification. HDPE cover shall be marked "SEWER" for identification.
4. Cast iron ring and cover, or HDPE box and cover, as well as the four (4 sf) square feet of material (concrete or asphalt around the clean-out), are part of the clean out installation and cost shall be included within the unit price for clean-out with no additional payment.
5. All clean-outs on this project shall be one of the four types shown on this sheet. Field conditions will determine which type.

● *FOR SANITARY SEWER CLEANOUTS*

CLEANOUT COVER DETAILS
Not to Scale

JACINTO CARLOS FERRAS, P.E. #49454 DESIGN DIVISION HEAD WASTEWATER DEPARTMENT	No.	DATE	REVISIONS	DES: DR / DRN: BL / CKD: / DATE:	CITY of TAMPA WASTEWATER DEPARTMENT	STANDARD DETAILS CLEANOUT COVER DETAILS	W.O. ---- SHEET 8 OF 15
	3						
	2						
	1						

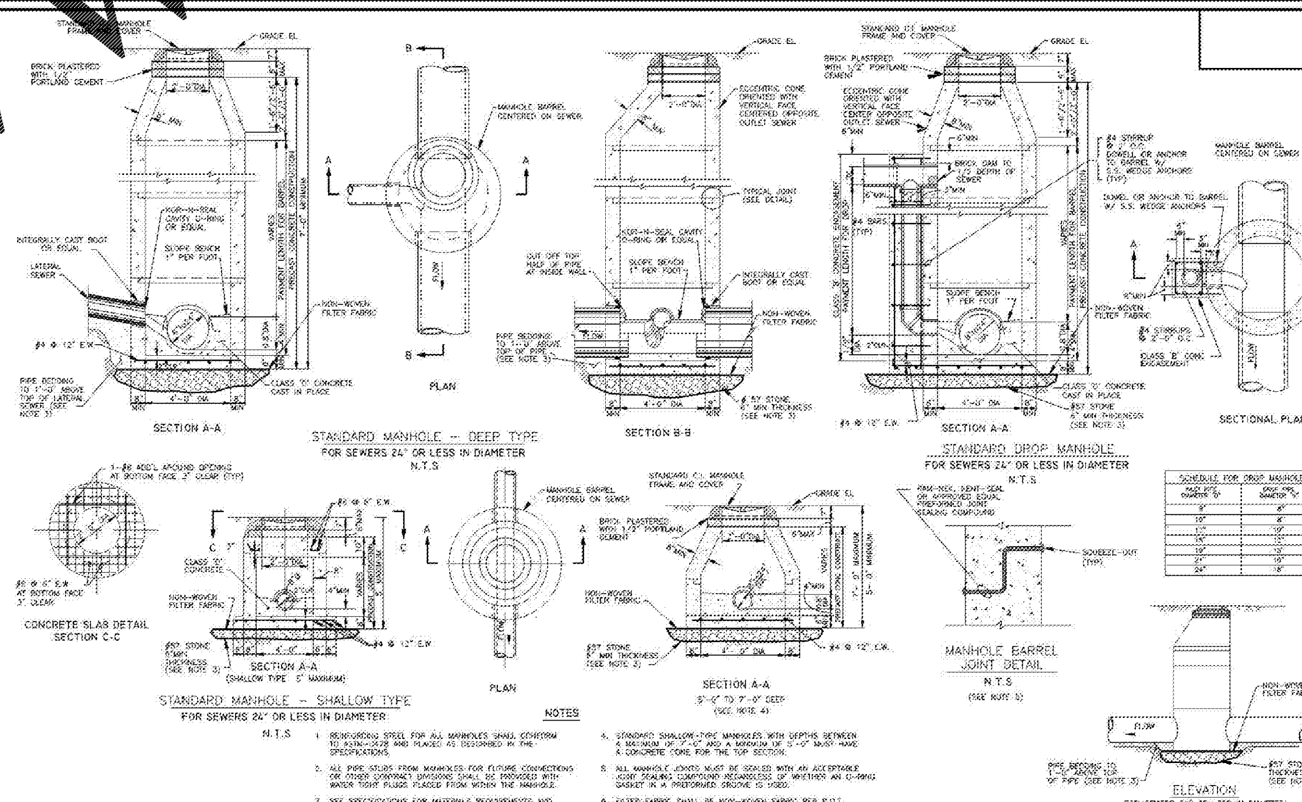

NOTES
1. REINFORCING STEEL FOR ALL MANHOLES SHALL CONFORM TO ASTM-C478 AND PLACED AS DESCRIBED IN THE SPECIFICATIONS.
2. ALL PIPE STUBS FROM MANHOLES FOR FUTURE CONNECTIONS OR OTHER CONTRACT DIVISIONS SHALL BE PROVIDED WITH WATER TIGHT PLUGS PLACED FROM WITHIN THE MANHOLE.
3. SEE SPECIFICATIONS FOR MATERIALS REQUIREMENTS AND PLACEMENTS AND COMPACTION OF PIPE AND STRUCTURE BEDDING.
4. STANDARD SHALLOW-TYPE MANHOLES WITH DEPTHS BETWEEN A MAXIMUM OF 7'-0" AND A MINIMUM OF 5'-0" MUST HAVE A CONCRETE CONE FOR THE TOP SECTION.
5. ALL MANHOLE JOINTS MUST BE SEALED WITH AN ACCEPTABLE JOINT SEALING COMPOUND REGARDLESS OF WHETHER AN O-RING GASKET IN A PREFORMED GROOVE IS USED.
6. FILTER FABRIC SHALL BE NON-WOVEN FABRIC PER D.O.T. SPECIFICATION SECTIONS 514 AND 985 AND SHALL BE WRAPPED ENTIRELY AROUND THE #57 STONE.

JACINTO CARLOS FERRAS, P.E. #49454 DESIGN DIVISION HEAD WASTEWATER DEPARTMENT	No.	DATE	REVISIONS	DES: DR / DRN: BL / CKD: / DATE:	CITY of TAMPA WASTEWATER DEPARTMENT	STANDARD DETAILS STANDARD MANHOLE 8" TO 24"	W.O. ---- SHEET 9 OF 15
	3						
	2						
	1						

PRELIMINARY
NOT FOR CONSTRUCTION

NO.	DATE	BY	REVISION DESCRIPTION

HRGreen
ILLINOIS DESIGN FIRM
184.001322
420 N. FRONT STREET, SUITE 100
McHENRY, IL 60050
PHONE: 815.385.1778
FAX: 815.385.1781

CAR CARE PLUS CENTER
AAA – AMERICAN AUTOMOBILE ASSOCIATION
1701 N. WESTSHORE BLVD., TAMPA, FL 33607

CIVIL
STANDARD CONSTRUCTION DETAILS

BAR IS ONE INCH ON OFFICIAL DRAWINGS
0 ▬▬▬ 1"
IF NOT ONE INCH, ADJUST SCALE ACCORDINGLY

DRAWN BY: ERN
APPROVED: JFV
JOB DATE: 06/20/2018
JOB NO: 160122

DRAWING
C–08

Order Plans @ WWW.LDILine.com