SHOWN ON THE EROSION AND SEDIMENT CONTROL PLAN

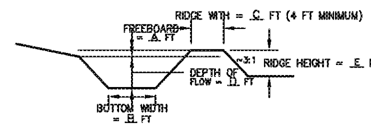

DIVERSION DITCHES					
DITCH NUMBER	A	B	C	D	E
1	1.51	2.0	4.0	0.49	VARIES
2–13	1.79	2.0	4.0	0.21	VARIES

(Di)

SILT FENCE - TYPE SENSITIVE

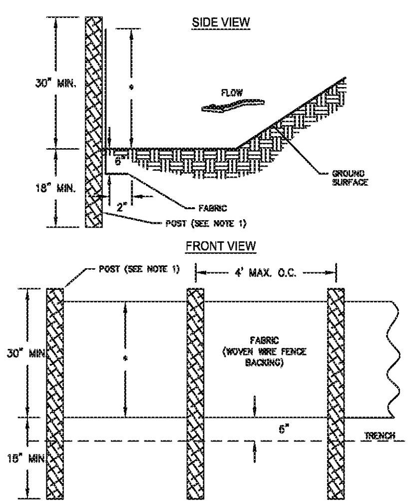

NOTES:
1. USE STEEL OR WOOD POSTS OR AS SPECIFIED BY THE EROSION, SEDIMENTATION, AND POLLUTION CONTROL PLAN.
2. HEIGHT (*) IS TO BE SHOWN ON THE EROSION, SEDIMENTATION, AND POLLUTION CONTROL PLAN.

(Sd1-S)

TREE PROTECTION

"SNOW" FENCE

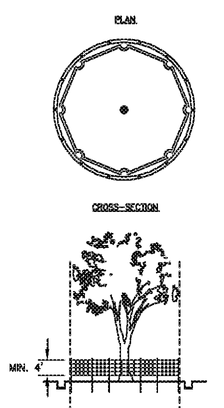

NOTES:
1. USE TRENCHER (I.E. DITCH WHICH) TO CUT A 4"-5" W X 18" D TRENCH ALONG DRIP LINE (LIMIT OF CLEARING) AND BACKFILL WITH SAND AND LIGHTLY COMPACT.
2. SPACE STAKES AT INTERVALS SUFFICIENT TO MAINTAIN ALL FENCING OUT OF DRIP LINE OR AS SHOWN BY ENGINEER (SET STAKES NO GREATER THAN 6 FEET ON CENTER-REBAR IS NOT TO BE USED FOR STAKES).
3. MAINTAIN FENCE BY REPAIRING AND/OR REPLACING DAMAGED FENCE. DO NOT REMOVE FENCING PRIOR TO LANDSCAPING OPERATIONS.
4. DO NOT STORE OR STACK MATERIALS, EQUIPMENT, OR VEHICLES WITHIN FENCED AREA.
5. FENCE SHALL BE ORANGE VINYL "SNOW FENCE" 4' HIGH MINIMUM.

(Tr)

RIPRAP OUTLET PROTECTION

PIPE OUTLET TO FLAT AREA -- NO WELL DEFINED CHANNEL

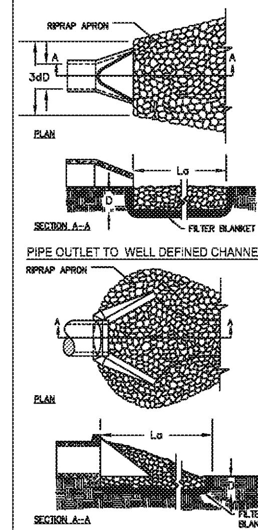

NOTES:
1. La IS THE LENGTH OF THE RIPRAP APRON.
2. D = 1.5 TIMES THE MAXIMUM STONE DIAMETER BUT NOT LESSHAN 6".
3. IN A WELL-DEFINED CHANNEL, EXTEND THE APRON UP THE CHANNEL BANKS TO AN ELEVATION OF 6" ABOVE THE MAXIMUM TAILWATER DEPTH OR TO THE TOP OF THE BANK (WHICHEVER IS LESS).
4. A FILTER BLANKET OR FILTER FABRIC SHOULD BE INSTALLED BETWEEN THE RIPRAP AND THE SOIL FOUNDATION.

FILTER BEDDING STONE

N.S.A. #(1)	SIZE IN INCHES (SQ. OPENING) MAX.	AVG (2)	MIN. (3)
FS-1	3/8"	#30 MESH	#100 MESH
FS-2	2.0"	#4	#100 MESH
FS-3	6.5"	2.5"	#16

1) NATIONAL STONE ASSOCIATION
2) AT LEAST 50% OF THE INDIVIDUAL STONE PARTICLES MUST BE EQUAL OR LARGER THAN THIS LISTED SIZE
3) 85-100% OF THE INDIVIDUAL STONE PARTICLES MAY BE LESS THAN LISTED SIZE

RIP-RAP N.S.A.[1] NO.	SIZE INCHES (SQ. OPENING) MAX.	AVG.[2]	MIN.	FILTER STONE N.S.A.[1] NO.	SIZE INCHES (SQ. OPENING) MAX.	AVG.[2]	MIN.[3]
R-3	6	3	2	FS-2	2	#4	#100 MESH
R-4	12	6	3				
R-5	18	9	5				

1. NATIONAL STONE ASSOCIATION
2. AT LEAST 50% OF THE INDIVIDUAL STONE PARTICLES MUST BE EQUAL OR LARGER THAN THIS LISTED SIZE
3. 85-100% OF THE INDIVIDUAL STONE PARTICLES MAY BE LESS THAN LISTED SIZE

REFER TO RIP RAP CHART ON PLAN FOR DIMENTIONS AND STONE SIZE FOR EACH RIP RAP LOCATION

GRADATION OF RIP-RAP ROCK

NSA NUMBER	SIZE IN INCHES d MAX. (inches)	AVG. (1) d50 (inches)	MIN. (2) (inches)	MIN. APRON THICKNESS (inches)	FILTER STONE N.S.A. NO. (3)
R-1	1.50"	0.75"	(NO. 8)	[illegible]	[illegible]
R-2	3"	1.50"	1"	[illegible]	FS-1
R-3	6"	3"	2"	[illegible]	FS-2
R-4	12"	6"	3"	[illegible]	FS-2
R-5	18"	[illegible]	[illegible]	[illegible]	FS-2
R-6	24"	12"	[illegible]	36"	FS-3
R-7	30"	15"	[illegible]	45"	FS-3
R-8	[illegible]	24"	15"	72"	FS-3

(1) "AVERAGE SIZE" IS THAT SIZE EXCEEDED BY AT LEAST 50% OF THE TOTAL, I.E., 50% OF THE TONNAGE SHALL CONSIST OF PIECES LARGER THAN THE "AVERAGE" SIZE (NORMALLY THE SPECIFIED NOMINAL TOP SIZE).
(2) PIECES SMALLER THAN THE MINIMUM SIZE SHALL NOT EXCEED 10% OF THE TONNAGE SHIPPED.
(3) NATIONAL STONE ASSOCIATION

STORM DRAIN OUTLET PROTECTION

STRUCTURE NUMBER	AVG. STONE SIZE (d50) (inches)	APRON LENGTH (La) (feet)	APRON WIDTH AT HEADWALL(W1) (feet)	APRON WIDTH DOWNSTREAM OF PIPE(W2) (feet)	MIN. APRON THICKNESS(d) (inches)	PIPE DIAMETER (inches)	FLOW RATE (cfs)	VELOCITY (fps)	TAILWATER CONDITION (feet)
St#1 EROSION	[illegible]	13	6	15	27	24	7.93	4.98	0
St#2 EROSION	6	9	4.5	10.5	18	18	10.30	5.83	0

(St) (48)

Buffer Zone — Bf

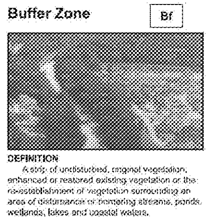

DEFINITION
A strip of undisturbed, original vegetation, enhanced or restored existing vegetation or the re-establishment of vegetation surrounding an area of disturbance or bordering streams, ponds, wetlands, lakes and coastal waters.

PURPOSE
To provide a buffer zone serving one or more of the following purposes:
- Reduce storm runoff velocities
- Act as screen for "visual pollution"
- Reduce construction noise
- Improve aesthetics [illegible] disturbed [illegible]
- Filtering [illegible] infiltrating runoff
- Cooling [illegible] and streams [illegible] shade providing [illegible] cover [illegible] wildlife and aquatic [illegible]
- [illegible] protection
- Protect channel banks from scour and erosion

CONDITIONS
A natural strip of vegetation should be preserved and, if needed, supplemented to form the buffer zone. There are two types of buffer zones.

General Buffers
A strip of undisturbed, original land surrounding the disturbed site. It can be useful not only to filter and infiltrate runoff, but also to act as a screen for "visual pollution" and reduce construction noise. General buffers may be enhanced to achieve desired goals.

Vegetated Stream Buffers
Buffers bordering streams are critical due to the invaluable protection of streams from sedimentation. Stream buffers are also useful in cooling rivers and providing food and cover for wildlife. Refer to the minimum requirements in Act 599 (O.C.G.A. 1-7-1, et. seq.) and Chapters 16 and 18 of the NRCS Engineering Field Handbook.

In most cases, the buffer zone will be incorporated into the permanent vegetative [illegible]. Refer to specification Ds3 - Disturbed Area Stabilization (With Permanent Vegetation).

DESIGN SPECIFICATIONS
Important design factors such as slope, hydrology, width and structure shall be considered. While Georgia Environmental Protection Division enforces minimum stream buffer requirements, expanding the stream buffer width is always encouraged. If land disturbing activity, including exempt and non-exempt practices, occurs within the GA EPD mandated stream buffers, cut and fill within the buffer shall be stabilized with appropriate matting or blanket.

General Buffers
A width should be selected to permit the zone to serve the purpose(s) as listed above. Supplemental plantings may be used to increase the effectiveness of the buffer zone.

Vegetated Stream Buffers
The structure of vegetated stream buffers should be considered to determine if the buffer must be enhanced to achieve the necessary goals. The size of the stream as well as the topography of the area must be considered to determine the appropriate width of the vegetated stream buffer. A vegetated stream buffer of 50 feet or greater can protect waters from excess sedimentation. The buffer should be increased 2 feet in width for every 1% slope (measured along a line perpendicular to the stream bank). Surface water pollution can be reduced with a 100 foot or wider vegetative buffer.

GSWCC [illegible] — 6-18

CURB INLET FILTER "PIGS IN BLANKET"

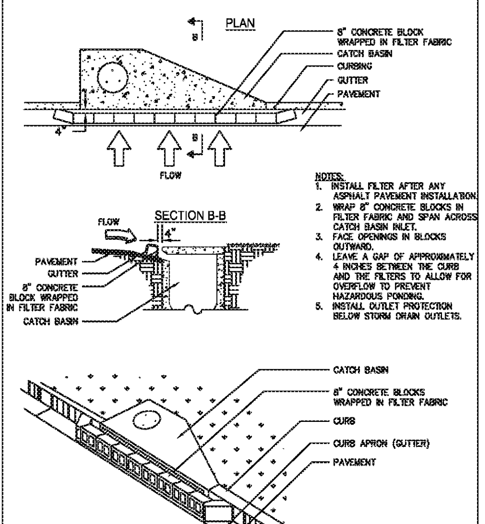

NOTES:
1. INSTALL FILTER AFTER ANY ASPHALT PAVEMENT INSTALLATION.
2. WRAP 8" CONCRETE BLOCKS IN FILTER FABRIC AND SPAN ACROSS CATCH BASIN INLET.
3. FACE OPENINGS IN BLOCKS OUTWARD.
4. LEAVE A GAP OF APPROXIMATELY 4 INCHES BETWEEN THE CURB AND THE FILTERS TO ALLOW FOR OVERFLOW TO PREVENT HAZARDOUS PONDING.
5. INSTALL OUTLET PROTECTION BELOW STORM DRAIN OUTLETS.

(Sd2-P)

TEMPORARY SEDIMENT POND SKIMMER

NOTE:
SKIMMER CONFIGURATION SHOWN IS TYPICAL. THE DESIGNER/ENGINEER MAY SUBMIT AN ALTERNATE SKIMMER DETAIL FOR REVIEW.

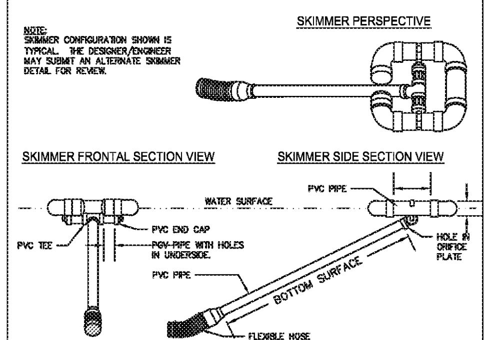

(SK)

4" *Faircloth Skimmer®* Surface Drain Cut Sheet
J. W. Faircloth & Son, Inc.
www.FairclothSkimmer.com

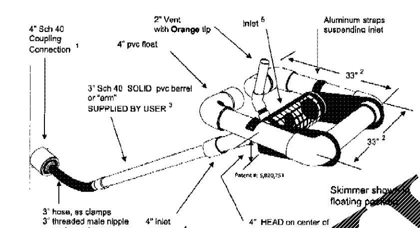

1. Coupling can be removed and hose attached to outlet using the threaded 3" nipple. Typical methods used: on a metal structure a steel stubout welded to the side at the bottom with a 3" threaded coupling or reducers; on a concrete structure with a pipe or orifice at the bottom, use a steel plate with a hole cut in it and coupling welded to it that will fit over the hole in the concrete and bolted to the structure with sealant. It is possible to grout the pipe in a hole in the concrete to connect the skimmer but this is less secure than other methods.
2. Dimensions are approximate, not intended as plans for construction.
3. Barrel (solid, not foam core pipe) should be 1.5 times the depth of water with a minimum length of 8' so the inlet can be pulled to the side for maintenance. If more than 8' long weight may have to be added to inlet to counter the increased buoyancy.
4. Inlet tapers down from 4" maximum inlet to a 3" barrel and hose. Barrel is smaller to reduce buoyancy and tendency to lift inlet but is sufficient for flow through inlet because of slope. The inlet orifice can be reduced using the plug and cutter provided to control the outflow rate.
5. Inlet is 8" pipe between the straps with slots cut in the inlet and aluminum screen door (smaller than shown in illustration) for access to the 4" inlet and orifice inside.
6. **Capacity**: 20,[illegible] cubic feet per day maximum with 4" inlet and 4" head. Inlet can be reduced by installing a smaller orifice using the plug and cutter provided to adjust flow rate for the particular basin volume and drawdown time required.
7. Shipped assembled. User glues inlet extension and barrel, installs vent, cuts orifice in plug and attaches to outlet pipe or structure. Includes flexible hose, rope, orifice cutter, etc.

4inchCu[illegible] 11-07 — November 14, 2007

TO BE SHOWN ON THE EROSION, SEDIMENTATION AND POLLUTION CONTROL PLAN

When a FLOATING SURFACE SKIMMER is used, show the following information along with each sediment pond, trap or basin being used on the site:

1. Pond, trap or basin size: length* (top and bottom) width* (top and bottom) and depth = **Sediment Basin #1:120'Lx95'W (top); 54'Lx17'W (bottom); 5' deep**
2. Time to Drain (hrs) = **72 hours**
3. Skimmer Dimensions (orifice and head size)** **4.0" skimmer with 3.2" orifice**
4. Manufacturer's name: **Faircloth**

(SK) — *feet, ** inches

Calculate Skimmer Size				
Basin Volume in Cubic Feet	39,029	Cu.Ft	Skimmer Size	4.0 Inch
Days to Drain*	3	Days	Orifice Radius	1.6 Inch[es]
			Orifice Diameter	3.2 Inch[es]

*In NC assume 3 days to drain

(SK)

EXCAVATED PIT CONCRETE WASHOUT

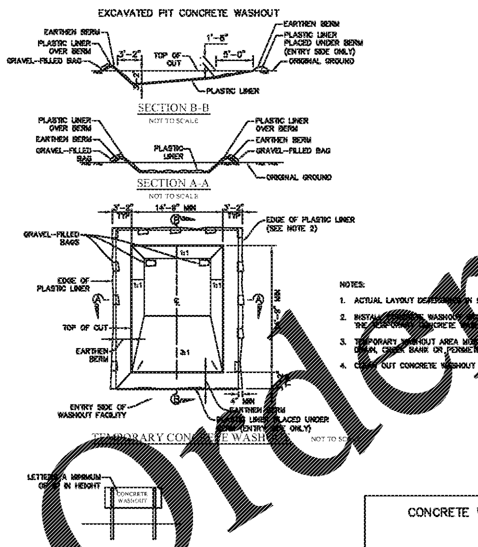

NOTES:
1. ACTUAL LAYOUT DETERMINED IN FIELD.
2. INSTALL CONCRETE WASHOUT SIGN (24"X24", MINIMUM) WITHIN 30' OF THE TEMPORARY CONCRETE WASHOUT FACILITY.
3. TEMPORARY WASHOUT AREA MUST BE AT LEAST 50' FROM A STORM DRAIN, CREEK BANK OR PERIMETER CONTROL.
4. CLEAN OUT CONCRETE WASHOUT AREA WHEN 50% FULL.

CONCRETE WASHOUT DETAIL

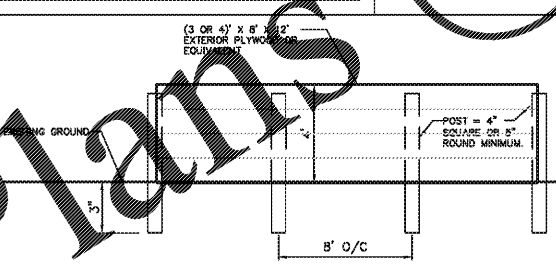

PLYWOOD BAFFLE DETAIL
N.T.S.

(XX) REPRESENTS NOTE/FEATURE WHICH CORRESPONDS WITH THE ES&PC PLAN CHECKLIST

EROSION SEDIMENTATION, AND POLLUTION CONTROL DETAILS

WOLVERTON
Engineering Solutions You Can Trust
6745 Sugarloaf Parkway • Suite 100 • Duluth, Georgia 30097
Phone: 770-447-8999
www.wolvertoninc.com

(02) GSWCC# 22364

Project Title
PROPOSED BURGER KING
COVINGTON, GA
BY: PREMIER HOLDINGS OF GEORGIA, LLC
MONTGOMERY, AL

REVISIONS	BY

DRAWN BY: SCR
CHECKED BY: THH
DATE: (03) 06/27/2018
SCALE: NO SCALE
JOB No. 17-CE-015
SHEET NUMBER
D-4B

(06)

OUT TO BID

17-CE-015 DETAILS.DWG

USER sheneil.robinson - Jul 03, 2018 - 2:05pm
Z:\All Project Data\Projects\2017\17-CE-015 Covington GA Premier Kings\CE\Production\Production Drawings\17-CE-015 Details.dwg

Order Plans @ WWW.LDLine.Com