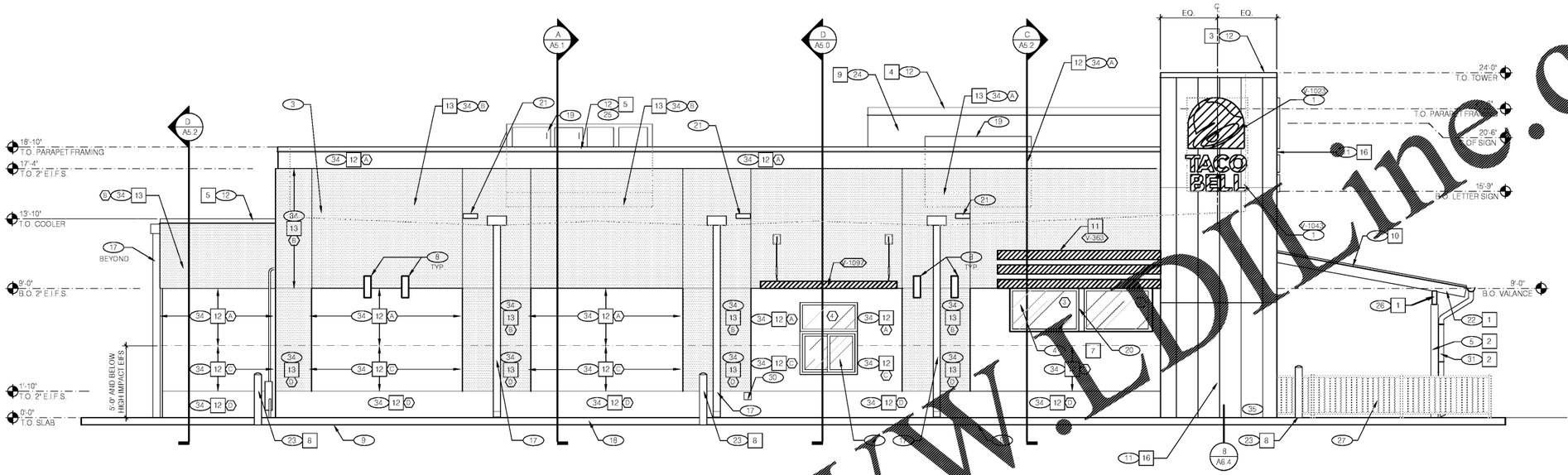

LEFT SIDE ELEVATION 1/4" = 1'-0" A

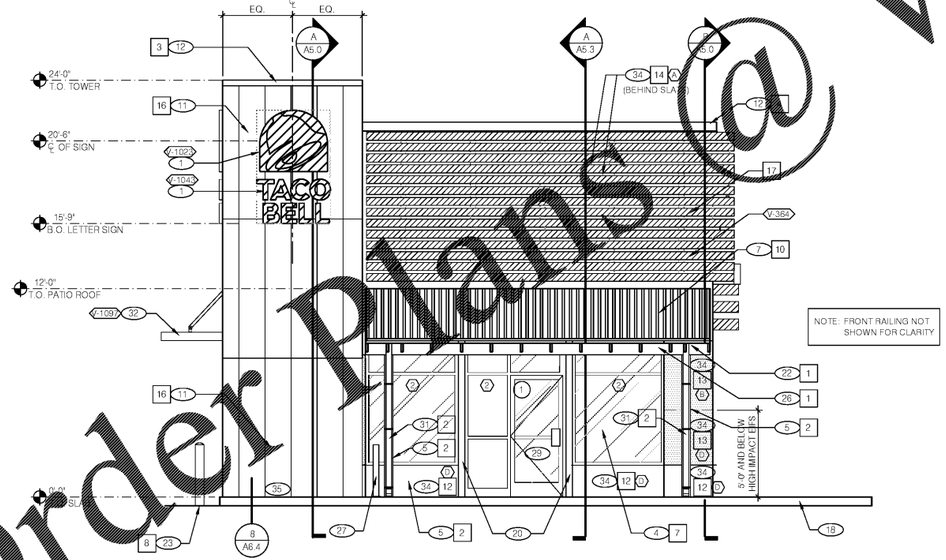

FRONT ELEVATION 1/4" = 1'-0" C

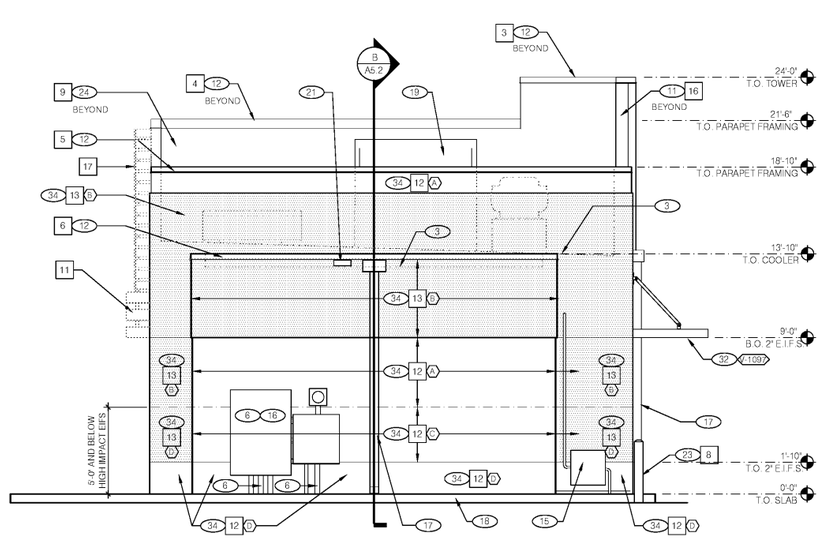

REAR ELEVATION 1/4" = 1'-0" B

architecture studio

1232 washington ave.
suite 310
st. louis, mo 63103
p: 314.241.6262
f: 314.241.6263
www.m2astudio.com

STATE OF GEORGIA
MARK J. GETTEMEYER
CERTIFICATE NO. 4A0 14382
REGISTERED ARCHITECT

Mark J. Gettemeyer, Architect

PERMIT/CONSTRUCTION SET

DATE: MAY 4, 2018

CONTRACT DATE:	XX.XX.XX
BUILDING TYPE:	EXPLORER LITE 40
PLAN VERSION:	DECEMBER 2017
SITE NUMBER:	XXX-XXX
STORE NUMBER:	XXXXX

TACO BELL

101 MONTGOMERY CROSSING
BISCOE, NC 27209

EXPLORER LITE
MEDIUM40

EXTERIOR ELEVATIONS

A4.1

PLOT DATE:

Order Plans @ www.LDILine.com