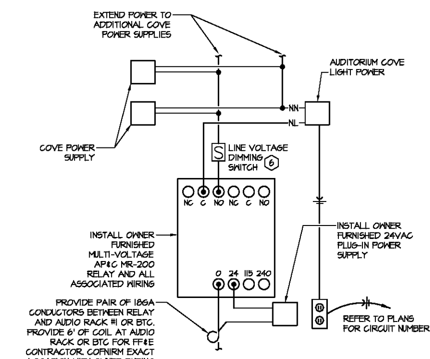

3 Auditorium Cove Light Control Schematic

Scale: Not To Scale

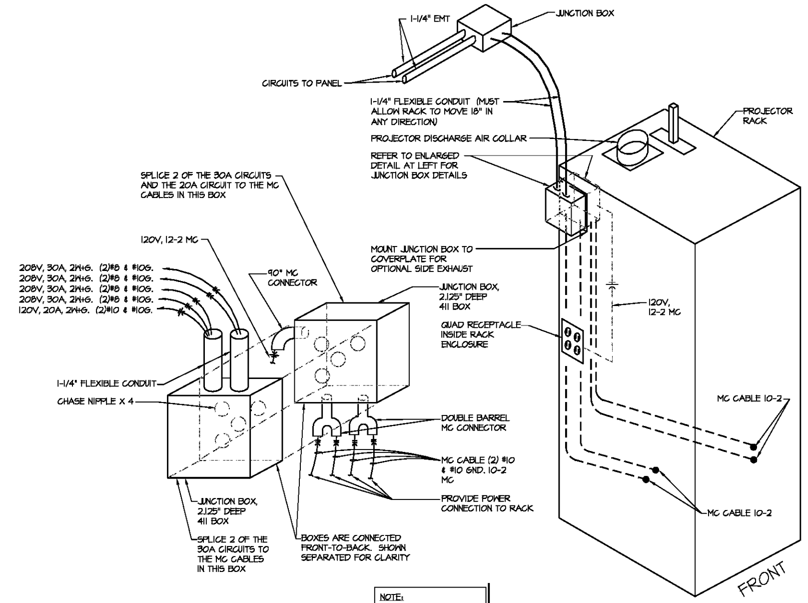

2 Laser Rack Power Detail

Scale: Not To Scale

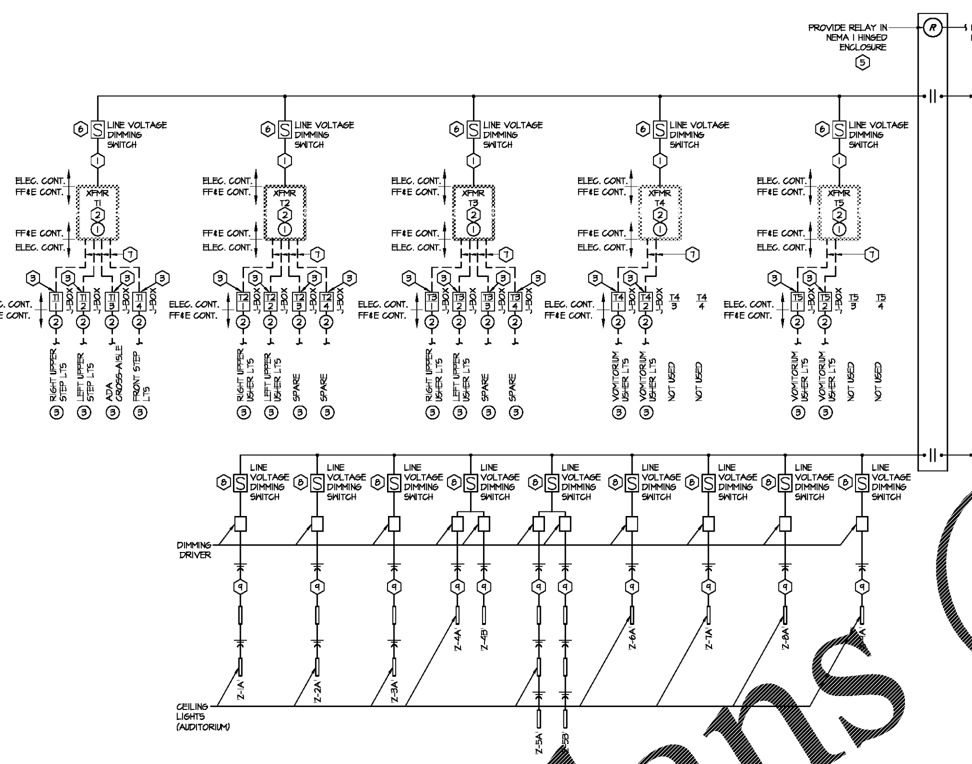

5 Lighting Controller Schematic

Scale: Not To Scale

FF&E DETAIL NOTES:

1. FURNISH POWER SUPPLY.
2. PROVIDE WIRING FOR LED LIGHTS DOWNSTREAM OF JUNCTION BOX.
3. PROVIDE LOW VOLTAGE LIGHTING AS SPECIFIED ON PLANS.

ELECTRICAL DETAIL NOTES:

1. 120V FEEDER - PROVIDE POWER TO POWER SUPPLIES.
2. INSTALL POWER SUPPLY.
3. PROVIDE JUNCTION BOX AND BLANK COVERPLATE FOR LOW VOLTAGE LIGHTING. PROVIDE 3'-0" COIL OF CONDUCTORS FOR CONNECTIONS BY FF&E CONTRACTOR. REFERENCE AUDITORIUM AND ENTRY LOW VOLTAGE PLAN SHEET PLFE4 FOR JUNCTION BOX LOCATIONS. LOCATIONS AND QUANTITY ARE SCHEMATIC. PROVIDE JUNCTION BOXES AS NECESSARY FOR A COMPLETE INSTALLATION.
4. REFER TO DOMESTIC DEVELOPMENT SHEETS FOR CONTOL.
5. LIGHTING CONTACTOR - PROVIDE LIGHTING CONTACTOR AND INSTALL ADJACENT TO LIGHTING CONTROL DEVICE. 2-POLE CONTACTOR SHALL BE SQUARE-D, MODEL# 8903LG02V02.
6. INSTALL LINE VOLTAGE ROCKER DIMMING SWITCH IN BOOTH. SWITCH SHALL BE LUTRON MODEL DVLV-600P SUPPLIED BY AISLE LIGHTING MANUFACTURER. INSTALL ADJACENT TO POWER SUPPLY IN BOOTH. PROVIDE CLEAR LOCKABLE COVER BY [illegible], MODEL MM[illegible]C, OR SIMILAR. PROVIDE ZIP TIE ON COVER AFTER LIGHT LEVELS ARE SET BY COMMISSIONING AGENT.
7. PROVIDE LOW VOLTAGE CABLES IN 3/4" CONDUIT FOR AISLE AND STAIR LIGHTING UPSTREAM OF JUNCTION BOX IN AUDITORIUM. [illegible] CONDUCTORS ON LOW VOLTAGE TRANSFORMER.
8. INSTALL LINE VOLTAGE ROCKER DIMMING SWITCH FURNISHED BY TEMPO IN BOOTH. SWITCH SHALL BE LUTRON MAESTRO MRF2-6ND-120-WH. REFER TO NEW WORK PLAN ON SHEET PLFE1 FOR LOCATION. INSTALL JUNCTION BOX EXTENSION COVER AND BLANK COVERPLATE FURNISHED BY TEMPO TO ENSURE DIMMING POSITION IS NOT CHANGED AFTER PROJECT CLOSEOUT.
9. INSTALL SURFACE MOUNTED HLS LIGHT FURNISHED BY TEMPO ON AUDITORIUM CEILING AND POWER.

AISLE LIGHTING XFMR WIRING LEGEND

- TRANSFORMER 1 - ADA, VERTICAL LIGHT, SEAT LIGHT, BULLNOSE, AND RUNWAY LIGHTING
- TRANSFORMER 2&3 - AUDITORIUM BACK & SIDE USHER LIGHTING
- TRANSFORMER 4&5 - VOMITORIUM USHER LIGHTING & TRASH NICHE

IF THE LINES TO THE LEFT ARE NOT IN COLOR, THEN SOME INFORMATION IS INCOMPLETE OR MISLEADING. COLORED LINES INDICATE WHICH TRANSFORMER IS FEEDING AISLE LIGHTING.

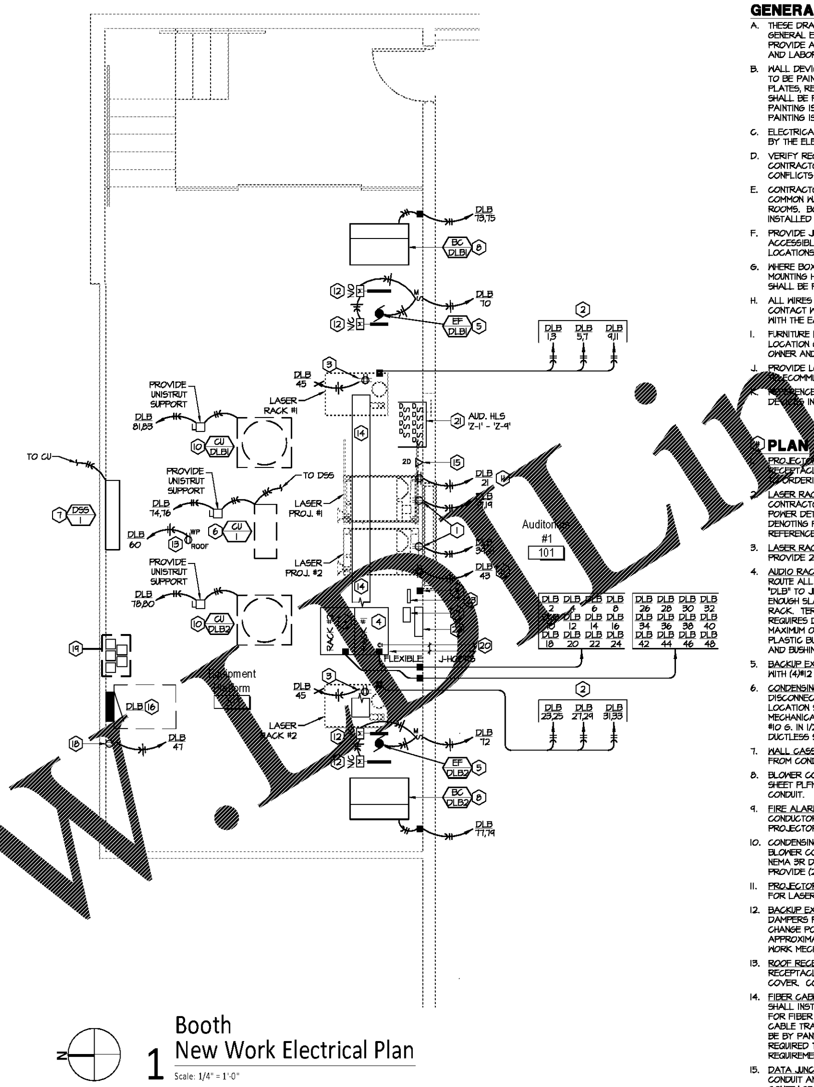

1 Booth New Work Electrical Plan

Scale: 1/4" = 1'-0"

GENERAL NOTES:

A. THESE DRAWINGS ARE DIAGRAMMATIC IN NATURE AND INDICATE THE GENERAL EXTENT OF THE WORK. THE ELECTRICAL CONTRACTOR SHALL PROVIDE ALL PULL BOXES, JUNCTION BOXES AND INCIDENTAL MATERIALS AND LABOR FOR A COMPLETE AND FULLY FUNCTIONAL SYSTEM.

B. WALL DEVICES IN THE AUDITORIUM, VOMITORIUM, VESTIBULE AND ENTRY TO BE PAINTED BLACK. DEVICES TO BE PAINTED INCLUDE COVER PLATES, RECEPTACLES AND THERMOSTATS. FIRE ALARM SPEAKERS SHALL BE PAINTED BLACK. FIRE ALARM STROBE SHALL BE RED, PAINTING IS NOT ACCEPTABLE. SMOKE DETECTORS SHALL BE BLACK, PAINTING IS NOT ACCEPTABLE.

C. ELECTRICAL CONTRACTOR SHALL DERATE CONDUCTORS AS REQUIRED BY THE ELECTRICAL CODE WHEN GROUPED IN COMMON RACEWAYS.

D. VERIFY REQUIREMENTS OF ALL MECHANICAL EQUIPMENT WITH CONTRACTOR-PROVIDED SUBMITTALS. NOTIFY ENGINEER OF ANY CONFLICTS BETWEEN THE SUBMITTALS AND ELECTRICAL DRAWINGS.

E. CONTRACTOR SHALL OFFSET OUTLET BOXES ON OPPOSITE SIDES OF COMMON WALL TO PREVENT SOUND TRANSMISSION BETWEEN ADJOINING ROOMS. BOXES SHALL BE A MINIMUM OF 12" APART, AND MUST BE INSTALLED IN SEPARATE STUD CAVITIES.

F. PROVIDE JUNCTION BOXES AND 3/4" CONDUIT WITH PULL STRINGS UP TO ACCESSIBLE LOCATION IN PLENUM AT ALL VOICE AND DATA OUTLET LOCATIONS.

G. WHERE BOXES ARE INSTALLED IN CONCRETE BLOCK WALLS, THE BOX MOUNTING HEIGHT SHALL BE AT THE BLOCK JOINT AND THE DEVICES SHALL BE PROVIDED WITH A JUMBO COVERPLATE.

H. ALL WIRES RUN BELOW GRADE, IN CONCRETE THAT IS IN DIRECT CONTACT WITH THE EARTH, OR MASONRY THAT IS IN DIRECT CONTACT WITH THE EARTH SHALL BE WET LOCATION LISTED.

I. FURNITURE LAYOUTS ARE FOR REFERENCE ONLY. COORDINATE THE FINAL LOCATION OF ELECTRICAL DEVICES AND OUTLETS WITH ARCHITECT, OWNER AND FINAL FURNITURE PLANS PRIOR TO INSTALLATION.

J. PROVIDE LOCKING CLIPS ON ALL CIRCUIT BREAKERS SERVING TELECOMMUNICATION EQUIPMENT AND FIRE ALARM CONTROL PANELS.

K. REFERENCE DOMESTIC DEVELOPMENT SHEETS FOR FIRE ALARM SYSTEM DEVICES IN DOLBY CINEMA AUDITORIUMS.

PLAN NOTES:

1. PROJECTOR RECEPTACLE (208V/1PH) - PROVIDE NEMA L6-30 RECEPTACLE FOR PROJECTOR. VERIFY PROJECTOR PLUG TYPE PRIOR TO ORDERING RECEPTACLE. PROVIDE (2)#10 & #10 G. IN 1/2"C.
2. LASER RACK POWER - PROVIDE POWER TO LASER RACK. ELECTRICAL CONTRACTOR TO PROVIDE JUNCTION BOXES AS SHOWN ON LASER RACK POWER DETAIL. PROVIDE TYPED ADHESIVE LABEL WITH ½" LETTERS DENOTING PANEL AND CIRCUIT NUMBERS ASSOCIATED WITH JUNCTION BOX. REFERENCE LASER RACK DETAIL ON THIS SHEET FOR MORE INFORMATION.
3. LASER RACK RECEPTACLE - PROVIDE LASER RACK RECEPTACLE. PROVIDE 20A/1P CIRCUIT BREAKER IN PANELBOARD AS SCHEDULED.
4. AUDIO RACK - PROVIDE POWER TO AUDIO RACKS AS SHOWN ON PLANS. ROUTE ALL CIRCUITS LABELED AS RACK #1 & #2 FROM PANELBOARD "DLB" TO JUNCTION BOX ON RACK VIA JUNCTION BOX ON WALL. PROVIDE ENOUGH SLACK IN CONDUCTORS TO REACH RECEPTACLES LOCATED IN RACK. TERMINATE CONDUCTORS AT RECEPTACLES. EACH CIRCUIT REQUIRES DEDICATED NEUTRAL AND GROUND CONDUCTORS. INSTALL A MAXIMUM OF FOUR CIRCUITS PER CONDUIT. PROVIDE 2" SLEEVES WITH PLASTIC BUSHINGS AS NOTED ON SCOPE SHEET. PROVIDE 2" CONDUIT AND BUSHING PER GENERAL CONTRACTOR NOTE #5 ON SHEET PLFME2.
5. BACKUP EXHAUST FAN - PROVIDE POWER TO NEW BACKUP EXHAUST FAN WITH (4)#12 & #12 GROUND WIRE IN A 1/2" CONDUIT.
6. CONDENSING UNIT - PROVIDE 30A, 240V, 2P, NON-FUSED, NEMA 3R DISCONNECT. REFER TO SHEET PLFM1 FOR MORE INFORMATION. LOCATION SHOWN ON THIS SHEET IS APPROXIMATE, COORDINATE WITH MECHANICAL CONTRACTOR FOR EXACT LOCATION. PROVIDE (2) #10 & #10 G. IN 1/2" CONDUIT. EXTEND POWER FROM CONDENSING UNIT TO DUCTLESS SPLIT SYSTEM.
7. WALL CASSETTE - PROVIDE POWER TO DUCTLESS SPLIT SYSTEM (DSS) FROM CONDENSING UNIT.
8. BLOWER COIL UNIT - PROVIDE POWER TO BLOWER COIL UNIT. REFER TO SHEET PLFM1 FOR MORE INFORMATION. PROVIDE (2) #12 & #12 G. IN 1/2" CONDUIT.
9. FIRE ALARM PROJECTOR SHUTDOWN - PROVIDE FIRE ALARM CONTROL CONDUCTORS FROM NEW BOOTH TERMINATION CABINET TO DOLBY PROJECTORS.
10. CONDENSING UNIT - PROVIDE POWER TO CONDENSING UNIT SERVING BLOWER COIL UNIT. PROVIDE 35A, 240V, 2-POLE, 2-WIRE, NON-FUSED, NEMA 3R DISCONNECT. REFER TO SHEET PLFM1 FOR MORE INFORMATION. PROVIDE (2) #12 & #10 G. IN 1/2" CONDUIT.
11. PROJECTOR RECEPTACLE (120V) - PROVIDE DEDICATED RECEPTACLE FOR LASER PROJECTOR.
12. BACKUP EXHAUST DAMPERS - PROVIDE 120V POWER TO MOTORIZED DAMPERS PROVIDED BY MECHANICAL CONTRACTOR. DAMPERS SHALL CHANGE POSITION WHEN FAN IS ENERGIZED. LOCATION SHOWN IS APPROXIMATE. REFERENCE HVAC SCHEMATIC AND DOLBY BOOTH NEW WORK MECHANICAL PLAN ON SHEET PLFM1 FOR MORE INFORMATION.
13. ROOF RECEPTACLE - PROVIDE 120V/1P POWER TO WEATHER RESISTANT RECEPTACLE ON ROOF. PROVIDE HEAVY DUTY IN-USE WEATHERPROOF COVER. COORDINATE INSTALLATION WITH MECHANICAL CONTRACTOR.
14. FIBER CABLE TRAY - CABLE TRAY FURNISHED BY OWNER. CONTRACTOR SHALL INSTALL CABLE TRAY BETWEEN LASER RACK AND PROJECTOR FOR FIBER OPTIC CABLE BY OWNER. CONTRACTOR SHALL INSTALL CABLE TRAY BETWEEN PROJECTOR AND AUDIO RACK. CABLE TRAY WILL BE BY PANDUIT, MODEL #WG12BL10, OR SIMILAR. LENGTH SHALL BE AS REQUIRED TO FULLY SUPPORT FIBER OPTIC CABLE. COORDINATE EXACT REQUIREMENTS WITH FIBER OPTIC INSTALLER PRIOR TO INSTALLATION.
15. DATA JUNCTION BOX - PROVIDE SINGLE-GANG JUNCTION BOX WITH 1" CONDUIT AND PULL STRING UP TO ACCESSIBLE LOCATION. LOW VOLTAGE CONTRACTOR SHALL PROVIDE PLENUM RATED CAT6 DATA CABLE TO ENTRY MONITOR AND CONNECT TO OWNER'S SERVER. COORDINATE CABLE SPECIFICS AND SERVER LOCATION WITH OWNER DURING CONSTRUCTION.
16. PANEL - PROVIDE PANEL AS SCHEDULED.
17. BOOTH TERMINATION CABINET - INSTALL BOOTH TERMINATION CABINET FURNISHED BY AMC. COORDINATE EXACT LOCATE OF BTC WITH AMC SIGHT & SOUND REPRESENTATIVE PRIOR TO INSTALLATION.
18. AUDITORIUM COVE LIGHT POWER - REFER TO DOLBY AUDITORIUM COVE LIGHT CONTROL SCHEMATIC ON THIS SHEET FOR MORE INFORMATION.
19. AISLE LIGHTING POWER - PROVIDE POWER TO AISLE LIGHTING TRANSFORMER PROVIDED BY FF&E CONTRACTOR. PROVIDE ADDITIONAL 120V/20A/1P CIRCUIT AS REQUIRED BY AISLE LIGHTING VENDOR LAYOUT. REFER TO LIGHTING CONTROLLER SCHEMATIC ON THIS SHEET FOR ADDITIONAL INFORMATION.
20. FRONT SPEAKER SIGNAL CABLE - FF&E CONTRACTOR TO FURNISH TWELVE (12) CAT6 CABLES. ELECTRICAL CONTRACTOR TO INSTALL TWELVE (12) CAT6 CABLES, TEN (10) FOR THE AUDIO RACK BEHIND THE SCREEN AND TWO (2) FOR FUTURE. WITHIN BOOTH, PROVIDE 2" FLEXIBLE CONDUIT. ABOVE AUDITORIUM, UTILIZE J-HOOKS. REFER TO SHEET PLFE2 FOR MORE INFORMATION.
21. AUDITORIUM HLS CEILING LIGHT DIMMING SWITCH - INSTALL DIMMING SWITCH FURNISHED BY TEMPO. REFER TO SHEET PLFE4 FOR LIGHTING CONTROLLED BY DIMMERS. REFER TO LIGHTING CONTROLLER SCHEMATIC ON THIS SHEET FOR ADDITIONAL INFORMATION.
22. SEAT TRANSDUCER TERMINATION BOX - REFER TO SHEET PLFME2 FOR ADDITIONAL INFORMATION.
23. GRAFIK EYE - PROVIDE GRAFIK EYE FOR GENERAL AUDITORIUM AND VESTIBULE LIGHTING. REFER TO DOMESTIC DEVELOPMENT SHEET E701 FOR CONTROL DIAGRAM.

FEEDER SCHEDULE:

(063) 60A, (3) #4, #10 G IN 1" C.

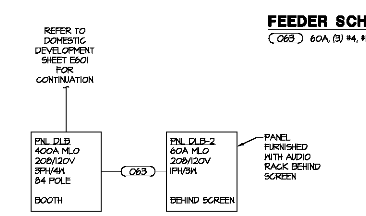

4 Electrical Riser Diagram

Scale: Not To Scale

NOTE: THIS ELECTRICAL RISER SHOWS ELECTRICAL WORK REQUIRED FOR DOLBY AUDITORIUM. REFERENCE ONE LINE DIAGRAM OF THE DOMESTIC DEVELOPMENT'S ELECTRICAL SHEETS FOR AUDITORIUM INFORMATION.

LIGHT FIXTURE SCHEDULE

MARK	MANUFACTURER	MODEL	LAMP DATA QUAN.	LAMP DATA TYPE	BALLAST TYPE	VOLTS	MOUNTING	TOTAL WATTS	DESCRIPTION	NOTES
A	TEMPO	3306[illegible]BL-B	1	LED	DRIVER	12	WALL	1w/ft	AUDITORIUM WALL LIGHT (DOLBY BLUE LED)	1, 2
A1	REFER TO DOMESTIC DEVELOPMENT LIGHT FIXTURE SCHEDULE FOR SPECIFIACTION.									
A2	REFER TO DOMESTIC DEVELOPMENT LIGHT FIXTURE SCHEDULE FOR SPECIFIACTION.									
A3	REFER TO DOMESTIC DEVELOPMENT LIGHT FIXTURE SCHEDULE FOR SPECIFIACTION.									
B	TEMPO	2312DSI-BW/XX04	-	LED	DRIVER	12	STAIR	0.25w/ft	TOP LED BULLNOSE (DOLBY BLUE LED)	2
C	TEMPO	2300 SERIES	-	-	-	-	STAIR	-	BULLNOSE WITH GRAY TREAD STRIPE	
D	TEMPO	2118BK1-BT	-	LED	DRIVER	12	FLOOR	0.33w/ft	CARPET TRANSITION / RAMP DROP OFF (DOLBY BLUE LED)	2
G	TEMPO	VL2-BL-BK	1	LED	DRIVER	12	FLOOR	0.5	RISER LIGHT (DOLBY BLUE LED)	2
HM	TEMPO	1000BK-2-12-B	-	LED	DRIVER	12	FLOOR	0.3	ILLUMINATED HANDICAP MONOGRAM	2
[illegible]	TEMPO	3306BK2-BL	-	LED	DRIVER	12	WALL	1w/ft	TRASH NICE LIGHT (DOLBY BLUE LED)	2
[illegible]	TEMPO	2312DSI-BW/XX04	-	LED	DRIVER	12	STAIR	0.5w/ft	TOP/FRONT LED BULLNOSE (DOLBY BLUE LED)	2
M	[illegible]	MDIL62-3K-FL	1	LED	DRIVER	12	RECESSED	4.8	FLOOD BEAM DOWN LIGHT	5
PXX	TEMPO	HLS-5-6-30-BK	1	LED	DRIVER	120/277	CEILING	10.8	BLACK SURFACE MOUNTED FIXTURE (DOLBY BLUE LED)	2, 4
R	TEMPO	C3R00-12-1003-33DP(BLUE)5-LG	1	LED	DRIVER	24	WALL	2w/ft	AUDITORIUM COVE LIGHT (DOLBY BLUE LED)	2, 3

NOTES:

1. REFER TO PLANS FOR MOUNTING HEIGHT.
2. THE NOMINAL NANOMETER WAVELENGTH FOR DOLBY BLUE IS 478NM.
3. PROVIDE POWER SUPPLY PWR-UNV-EM-060-Z.
4. "XX" DENOTES MANUFACTURER BAFFLE HEIGHT TYPE; "L" DENOTES LANDING FIXTURE. "N" DENOTES NARROW SPREAD FIXTURE. "LB" DENOTES SQUARE SPREAD FIXTURE.
5. PROVIDE TRANSFORMER MODEL # TL602E. FINISH OF FIXTURE TO MATCH CEILING. FOR FIXTURE MOUNTED IN AN EXISTING CEILING, FIELD VERIFY EXISTING CEILING COLOR. FOR FIXTURE MOUNTED IN A NEW CEILING, REFER TO ARCHITECTURAL DRAWINGS FOR CEILING COLOR.

GENERAL NOTES:

A. PROVIDE ALL REQUIRED ACCESSORIES FOR A COMPLETE INSTALLATION.
B. CONTRACTOR SHALL SOLICIT PROPOSALS FOR LIGHT FIXTURES, LAMPS, POWER DISTRIBUTION SYSTEM, AND DIMMING SYSTEM FROM PRE-QUALIFIED SUPPLIER: RON DOYLE AT LC WIDENBACH-BROWN. ADDRESS: 22901 LA PALMA AVE. YORBA LINDA, CALIFORNIA 92887. PHONE: 714-501-2199 x322. FAX: 914-846-1532.

PANEL DLB

DESCRIPTION: 400A MLO — 100% Neutral Bus — VOLTAGE: 120/208V, 3PH, 4 WIRE

TOTAL CONNECTED LOAD: 94kW= 260A

DEMANDED LOAD CONTINUOUS: 93kW= 259A

NO	LOAD (W)	LOAD DESCRIPTION	P	AMP SIZE	PH	AMP SIZE	P	LOAD DESCRIPTION	LOAD (W)	NO
1	1653	LASER RACK 1-1	2	30	A	20	1	SOUND RACK 1-1	750	2
3	1653	-	-	-	B	20	1	SOUND RACK 1-2	750	4
5	1653	LASER RACK 1-2	2	30	C	20	1	SOUND RACK 1-3	750	6
7	1653	-	-	-	A	20	1	SOUND RACK 1-4	750	8
9	1653	LASER RACK 1-3	2	30	B	20	1	SOUND RACK 1-5	750	10
11	1653	-	-	-	C	20	1	SOUND RACK 1-6	750	12
13	0	SPARE	2	30	A	20	1	SOUND RACK 1-7	750	14
15	0	-	-	-	B	20	1	SOUND RACK 1-8	750	16
17	550	LASER PROJECTOR #1	2	30	C	20	1	SOUND RACK 1-9	750	18
19	550	-	-	-	A	20	1	SOUND RACK 1-10	750	20
21	360	PROJECTOR RCPT 1	1	20	B	20	1	SOUND RACK 1-11	750	22
23	1653	LASER RACK 2-1	2	30	C	20	1	SOUND RACK 1-12	750	24
25	1653	-	-	-	A	20	1	SOUND RACK 2-1	750	26
27	1653	LASER RACK 2-2	2	30	B	20	1	SOUND RACK 2-2	750	28
29	1653	-	-	-	C	20	1	SOUND RACK 2-3	750	30
31	1653	LASER RACK 2-3	2	30	A	20	1	SOUND RACK 2-4	750	32
33	1653	-	-	-	B	20	1	SOUND RACK 2-5	750	34
35	0	SPARE	2	30	C	20	1	SOUND RACK 2-6	750	36
37	0	-	-	-	A	20	1	SOUND RACK 2-7	750	38
39	550	LASER PROJECTOR #2	2	30	B	20	1	SOUND RACK 2-8	750	40
41	550	-	-	-	C	20	1	SOUND RACK 2-9	750	42
43	360	PROJECTOR RCPT 2	1	20	A	20	1	SOUND RACK 2-10	750	44
45	720	LASER RACK RCPT	1	20	B	20	1	SOUND RACK 2-11	750	46
47	314	AUDITORIUM COVE LIGHT	1	20	C	20	1	SOUND RACK 2-12	750	48
49	1728	SEATS ROW A	1	20	A	20	1	SPARE	0	50
51	1920	SEATS ROW B	1	20	B	20	1	ENTRY MONITOR	360	52
53	1920	SEATS ROW C	1	20	C	20	1	AISLE LIGHTING	500	54
55	1152	SEATS ROW D	1	20	A	20	1	AISLE LIGHTING	500	56
57	1920	SEATS ROW E	1	20	B	20	1	SCREEN SHAKER	1600	58
59	1920	SEATS ROW F	1	20	C	20	1	RCPT-ROOF	180	60
61	1920	SEATS ROW G	1	20	A	20	1	GENERAL LIGHTING	486	62
63	1920	SEATS ROW H	1	20	B	20	1	SPARE	0	64
65	1920	SEATS ROW J	1	20	C	20	1	SPARE	0	66
67	1920	SEATS ROW K1	1	20	A	20	1	SPARE	0	68
69	192	SEATS ROW K2	1	20	B	20	1	EF-DLB1	864	70
71	1080	AUD. RECEPTACLES	1	20	C	20	1	EF-DLB2	864	72
73	1040	BC-DLB1	2	15	A	25	2	DUCTLESS SPLIT SYSTEM #1	2028	74
75	1040	-	-	-	B	-	-	(3 TON)	2028	76
77	1040	BC-DLB2	2	15	C	35	2	CU-DLB2	2496	78
79	1040	-	-	-	A	-	-	-	2496	80
81	2496	CU-DLB1	2	35	B	60	2	PNL DLB-2	4370	82
83	2496	-	-	-	C	-	-	-	4370	84

Order Plans @ WWW.LDILine.com

MEP
HOSS & BROWN ENGINEERS
11205 West 79th Street
Lenexa, Kansas 66214
(913) 362-9090 phone
mail@h-be.com
H&B Project Number: 1720718
GW& Project Number: 2017.671

Copyright 2018

DRAWN BY: BJS

CHECKED BY: MST

SHEET LEGEND

G000's	GENERAL INFORMATION & SCOPE OF WORK
N100's	EGRESS / ADA PLANS & DETAILS
A100's	FLOOR PLANS & CEILING PLANS
A200's	EXTERIOR & INTERIOR ELEVATIONS
A300's	BUILDING SECTIONS
A400's	ENLARGED PLANS
A500's	EXTERIOR & INTERIOR DETAILS
A600's	DOOR SCHEDULE, DOOR DETAILS, FINISH SCHEDULE, FINISH PLANS
Q100's	AUDITORIUM SIGHT LINE SECTIONS
S's	STRUCTURAL
M's	MECHANICAL
P's	PLUMBING
E's	ELECTRICAL
WF's	WAYFINDING DETAILS
FS's	CASEWORK & EQUIPMENT
PLF's	PLF AUDITORIUM

AMC MADISON YARDS 8

AMC NEW BUILD
905 MEMORIAL DR SE
ATLANTA, GA 30316

American Multi-Cinema, Inc.
One AMC Way
11500 Ash Street
Leawood, KS 66211

REV	DATE	DESCRIPTION

Project Issue Date: 05/22/2018

KEY PLAN:

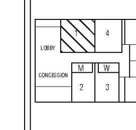

SHEET TITLE: BOOTH ELECTRICAL PLANS, SCHEDULES & DETAILS

SHEET NUMBER: PLFE1