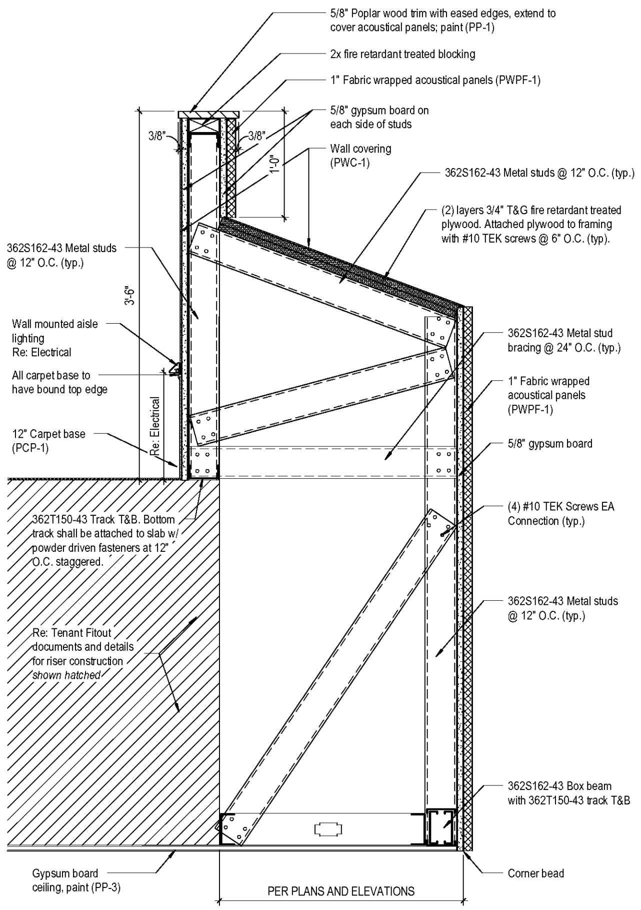

J1 | PLFA5 — **Vomitory Build Out** — 1 1/2" = 1'-0"

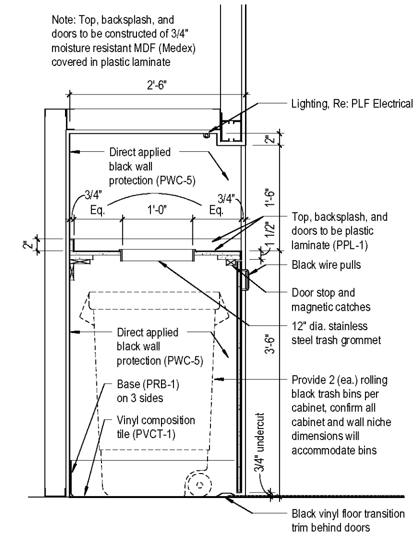

N6 | PLFA5 — **Trash Cabinet - Section** — 1" = 1'-0" — LM: 01/05/18

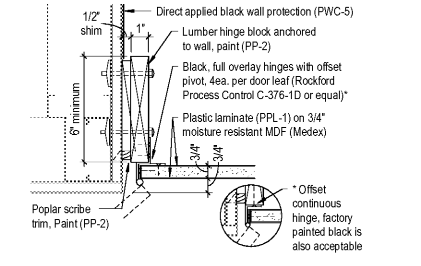

R10 | PLFA10 — **Trash Cabinet - Door Detail** — 3" = 1'-0" — LM: 04/17/18

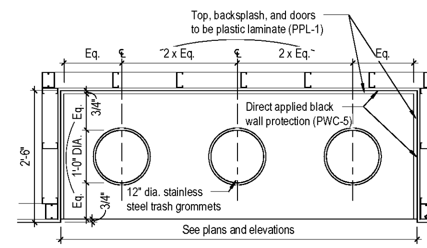

M10 | PLFA7 — **Trash Cabinet - Plan** — 3/4" = 1'-0" — LM: 01/05/18

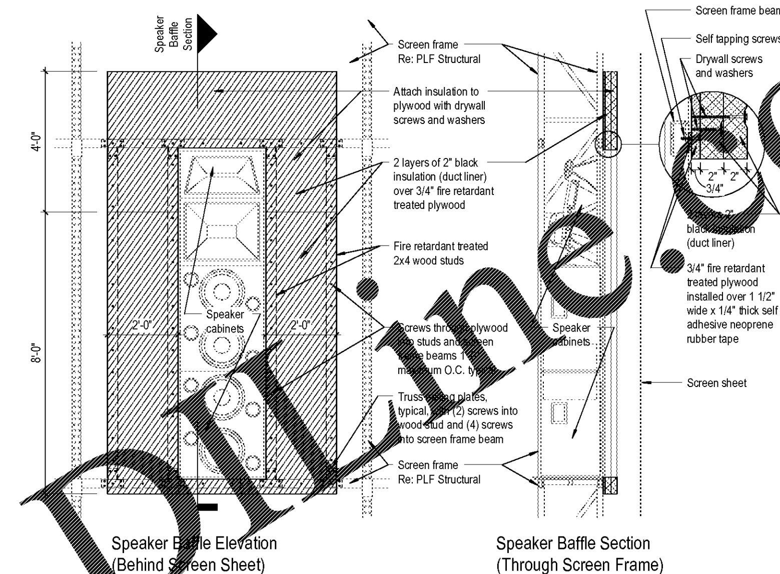

NOTE: This is not a design for the screen frame, screen or platforms, they are represented here to illustrate the placement and construction of the acoustical baffle components only

L14 | PLFA5 — **Behind Screen Acoustical Baffle** — 1/2" = 1'-0" — LM: 01/05/18

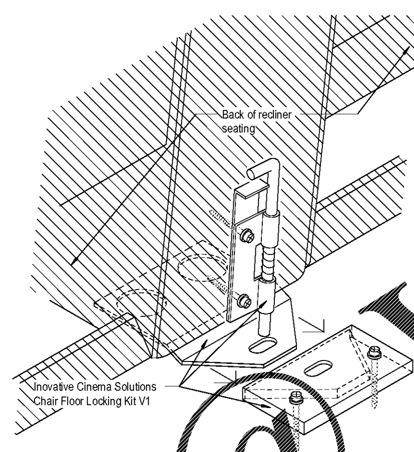

G6 — **Seating Floor Lock Stystem** — Not to Scale — LM: 01/05/18

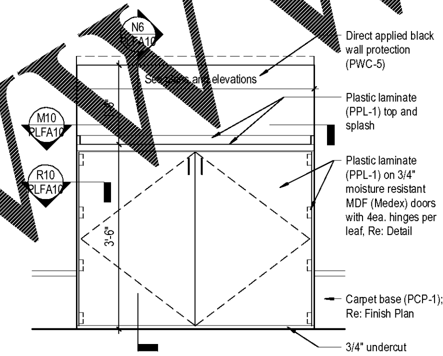

G10 — **Trash Cabinet - Elevation** — 3/4" = 1'-0" — LM: 04/16/18

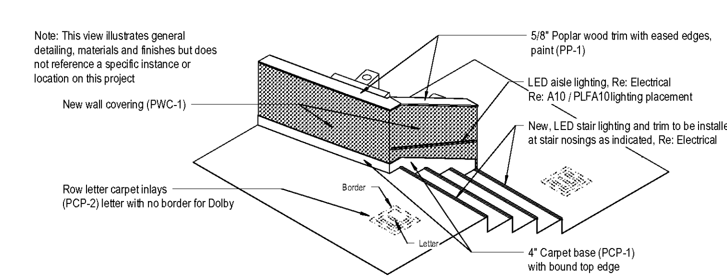

G14 — **Auditorium Finishes and Details** — Not to Scale — LM: 01/05/18

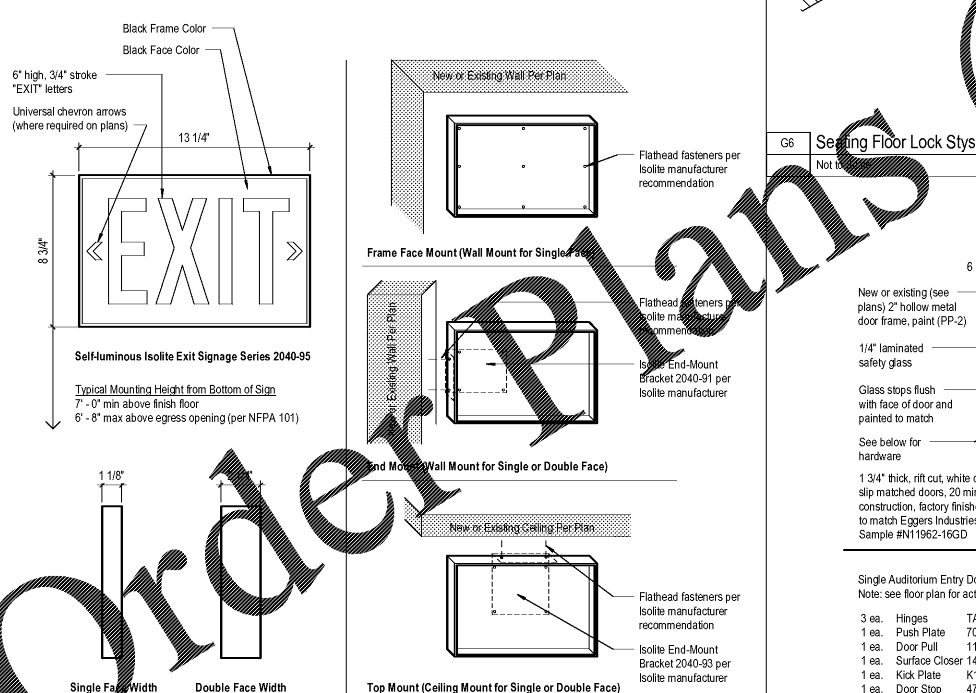

A1 — **Tritium Exit Signage Detail** — Not to Scale

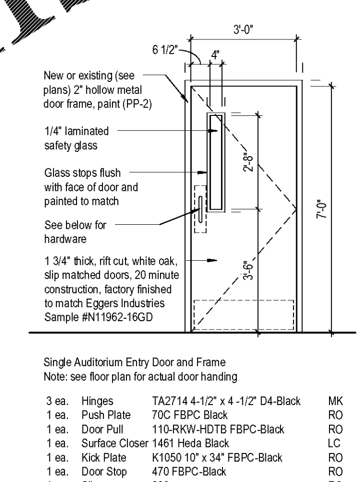

Single Auditorium Entry Door and Frame
Note: see floor plan for actual door handing

3 ea.	Hinges	TA2714 4-1/2" x 4 -1/2" D4-Black	MK
1 ea.	Push Plate	70C FBPC Black	RO
1 ea.	Door Pull	110-RKW-HDTB FBPC-Black	RO
1 ea.	Surface Closer	1461 Heda Black	LC
1 ea.	Kick Plate	K1050 10" x 34" FBPC-Black	RO
1 ea.	Door Stop	470 FBPC-Black	RO
1 ea.	Silencer	608	RO

A6 — **Auditorium Entry Doors and Frames** — Not to Scale — LM: 04/16/18

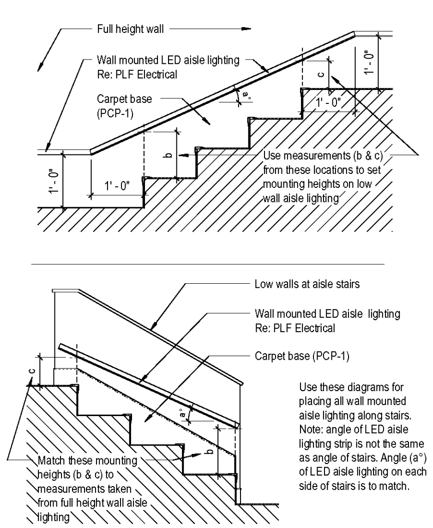

A10 — **Aisle Lighting Placement @ Stairs** — Not to Scale — LM: 01/05/18

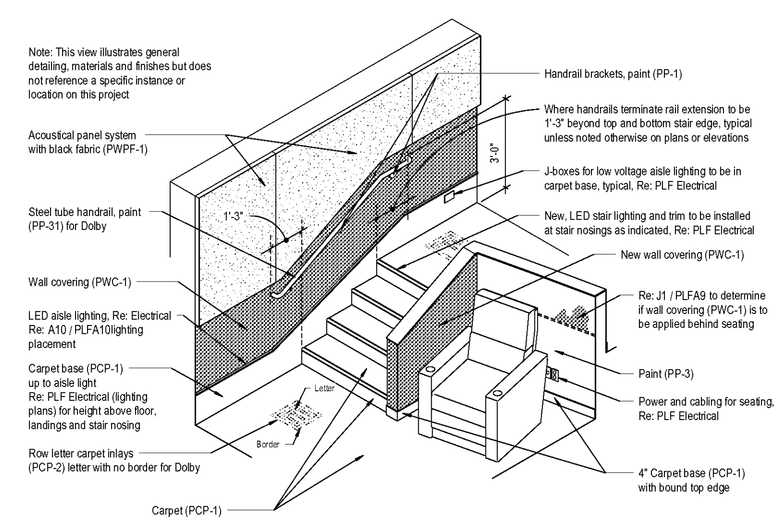

A14 — **Auditorium Finishes and Details** — Not to Scale — LM: 01/05/18

Gastinger Walker &
Architects | Interior Designers | Construction Managers
817 Wyandotte Kansas City Missouri 816 421
gastingerwalker.com

SIGNATURE DATE:

STATE OF GEORGIA — JARA E. BEE TRIPLETT — REGISTERED ARCHITECT

SHEET LEGEND

G000's	GENERAL INFORMATION & SCOPE OF WORK
N100's	EGRESS / ADA PLANS & DETAILS
A100's	FLOOR PLANS & CEILING PLANS
A200's	EXTERIOR & INTERIOR ELEVATIONS
A300's	BUILDING SECTIONS
A400's	ENLARGED PLANS
A500's	EXTERIOR & INTERIOR DETAILS
A600's	DOOR SCHEDULE, DOOR DETAILS, FINISH SCHEDULE, FINISH PLANS
Q100's	AUDITORIUM SIGHT LINE SECTIONS
S's	STRUCTURAL
M's	MECHANICAL
P's	PLUMBING
E's	ELECTRICAL
WF's	WAYFINDING DETAILS
FS's	CASEWORK & EQUIPMENT
PLF's	PLF AUDITORIUM

AMC MADISON YARDS 8

AMC NEW BUILD
905 MEMORIAL DR SE
ATLANTA, GA 30316

American Multi-Cinema, Inc.
One AMC Way
11500 Ash Street
Leawood, KS 66211

© Copyright 2018 American Multi-Cinema, Inc.

No.	Date	Description

Project Issue Date: 05/22/2018

KEY PLAN:

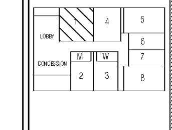

SHEET TITLE: Auditorium #1 Auditorium Details

SHEET NUMBER: PLFA10

Order Plans @ WWW.LDIline.com