Order Plans @ www.LDILine.com

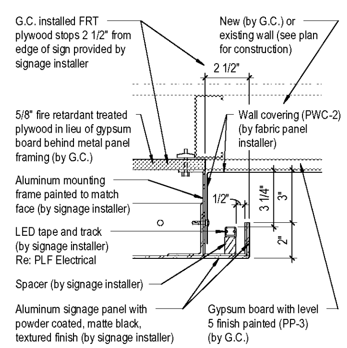

P1 Dolby - Vertical Light Cove @ Entry Sign
3" = 1'-0"
LM: 03/20/18

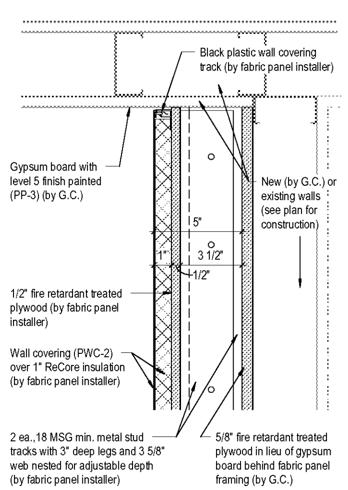

G1 Dolby - Fabric Panel
PLFA7 3" = 1'-0"
LM: 01/05/18

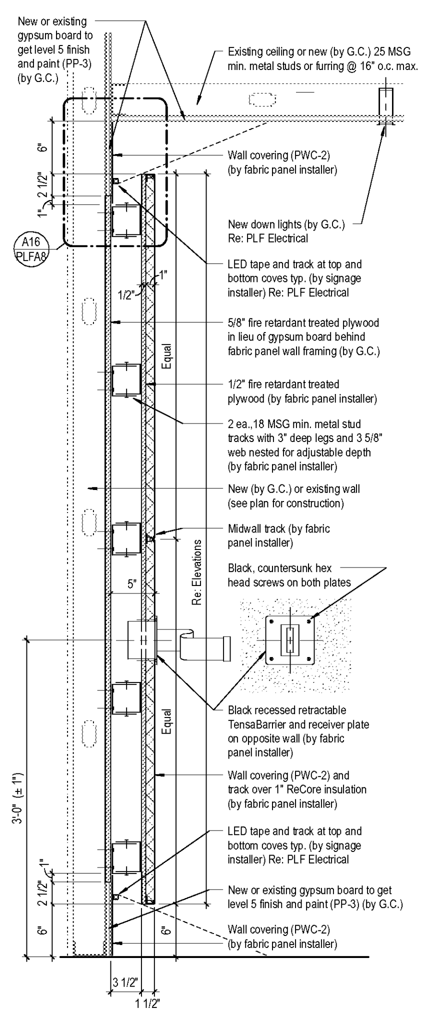

G4 Dolby Entry - Fabric Panel
PLFA7 1 1/2" = 1'-0"

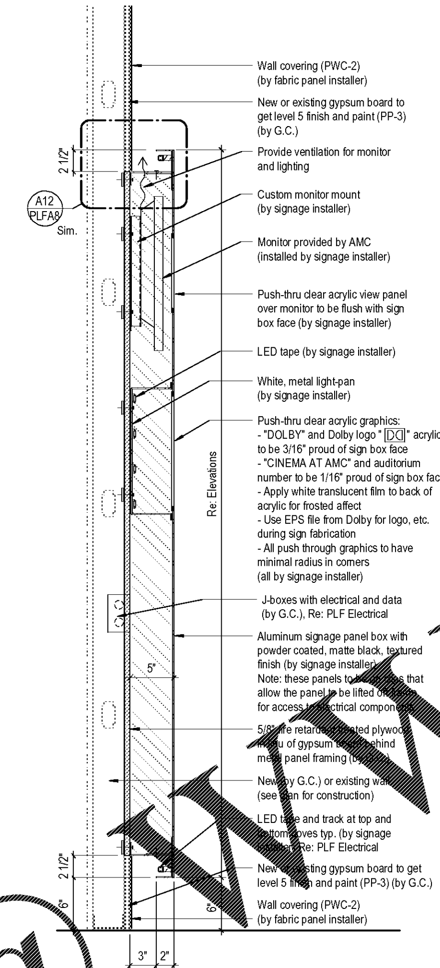

G8 Dolby Entry - Metal Sign Panel
PLFA7 1 1/2" = 1'-0"
LM: 01/05/18

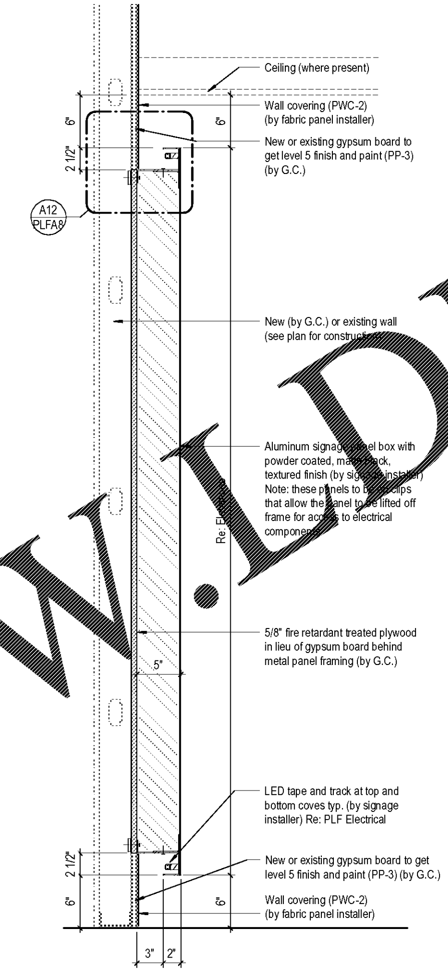

G12 Dolby Entry - Metal Flat Panel
PLFA7 1 1/2" = 1'-0"
LM: 03/020/18

This section is intended to clarify the General Contractor's (G.C.) scope of work at the Dolby Cinema auditorium entries.
- Any items in these entry details and sections called out as (by fabric panel installer) or (by signage installer) will not be provided or installed by the G.C.

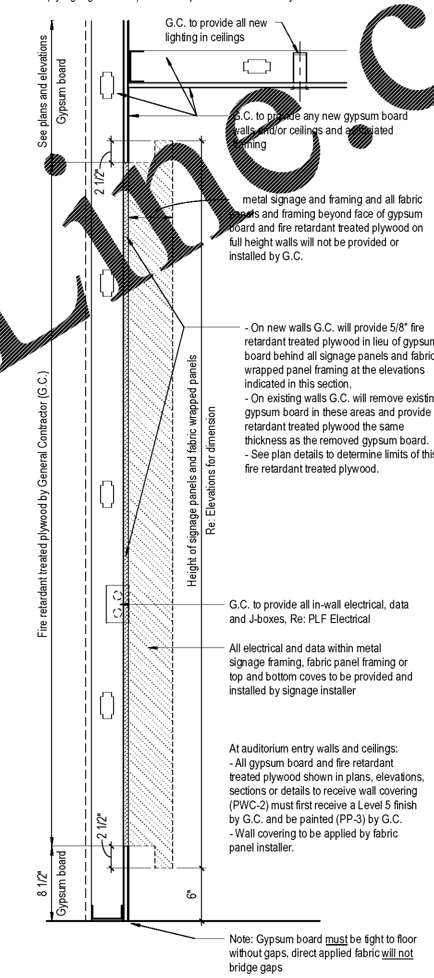

G16 Dolby Entry - G.C. Scope of Work
1 1/2" = 1'-0"
LM: 01/05/18

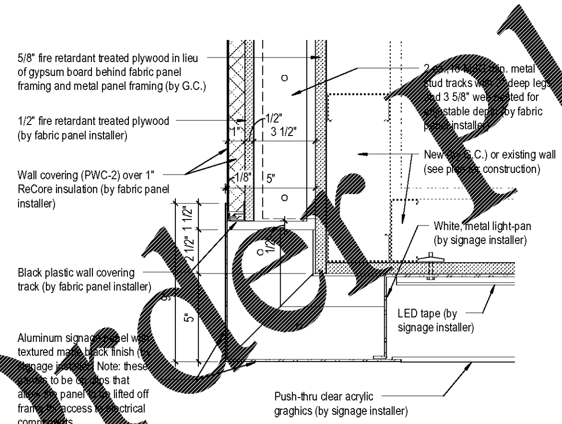

A1 Dolby - Corner Detail @ Entry Sign
PLFA7 3" = 1'-0"
LM: 03/20/18

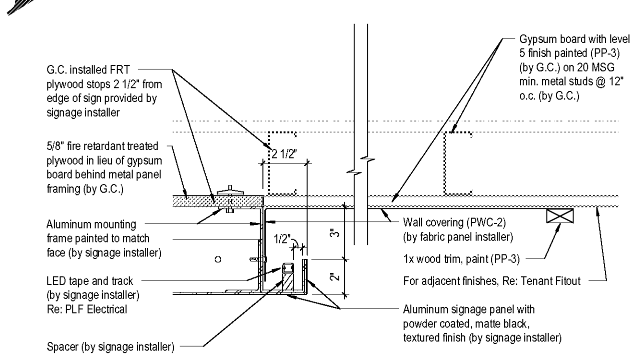

A6 Dolby - Vertical Light Cove and Wall Build Out
PLFA7 3" = 1'-0"
LM: 03/20/18

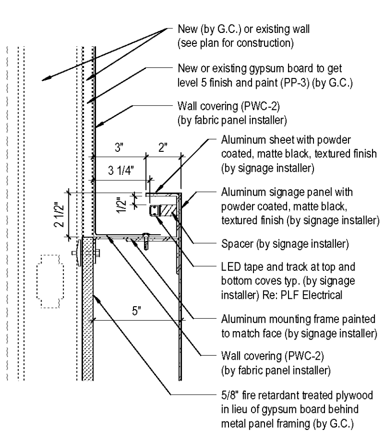

A12 Dolby - Horizontal Light Cove @ Entry Sign
PLFA8 3" = 1'-0"
LM: 03/20/18

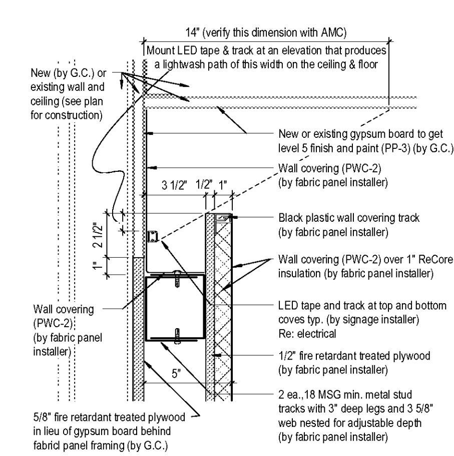

A16 Dolby - Light Cove Detail @ Fabric Panels
PLFA8 3" = 1'-0"
LM: 01/05/18

STATE OF GEORGIA
JARA S. BEE TRIPLETT
REGISTERED ARCHITECT

SIGNATURE DATE:

GastingerWalker&
Architects | Interior Designers | Construction Managers
817 Wyandotte Kansas City Missouri 816 421
gastingerwalker.com

SHEET LEGEND

G000's	GENERAL INFORMATION & SCOPE OF WORK
N100's	EGRESS / ADA PLANS & DETAILS
A100's	FLOOR PLANS & CEILING PLANS
A200's	EXTERIOR & INTERIOR ELEVATIONS
A300's	BUILDING SECTIONS
A400's	ENLARGED PLANS
A500's	EXTERIOR & INTERIOR DETAILS
A600's	DOOR SCHEDULE, DOOR DETAILS, FINISH SCHEDULE, FINISH PLANS
Q100's	AUDITORIUM SIGHT LINE SECTIONS
S's	STRUCTURAL
M's	MECHANICAL
P's	PLUMBING
E's	ELECTRICAL
WF's	WAYFINDING DETAILS
FS's	CASEWORK & EQUIPMENT
PLF's	PLF AUDITORIUM

AMC MADISON YARDS 8

AMC NEW BUILD
905 MEMORIAL DR SE
ATLANTA, GA 30316

American Multi-Cinema, Inc.
One AMC Way
11500 Ash Street
Leawood, KS 66211

© Copyright 2018 American Multi-Cinema, Inc.

No.	Date	Description

Project Issue Date: 05/22/2018

KEY PLAN:

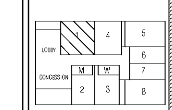

SHEET TITLE:
Auditorium #1 Entry Portal Details

SHEET NUMBER:
PLFA8