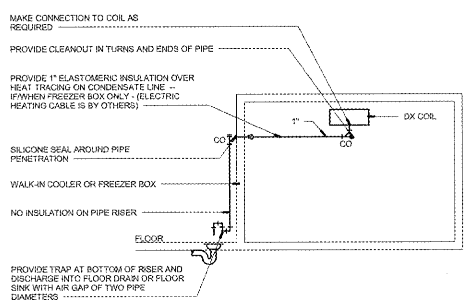

NOTES:
INSTALL PIPE HIGH AS POSSIBLE, ANCHORED TO WALL OF BOX WITH SUPPORTS AT MAXIMUM SIX FOOT CENTERS. USE TYPE "M" HARD COPPER TUBE AND FITTINGS WITH LEAD-FREE SOLDER JOINTS. SLOPE HORIZONTAL PIPE AT MINIMUM TWO PERCENT. REFER TO LOCAL CODE FOR INDIRECT DRAIN REQUIREMENTS.

SEE FLOOR PLAN FOR RECEPTACLE LOCATION.

WALK-IN COOLER/FREEZER CONDENSATE DRAIN

NOT TO SCALE PD107

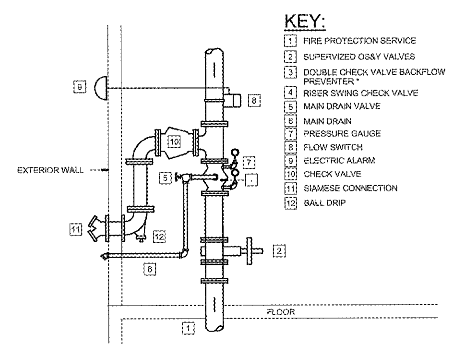

NOTE:
ARRANGEMENT SHOWN IS SCHEMATIC. MODIFY TO SUIT MANUFACTURER'S STANDARDS, MEET LOCAL CODE REQUIREMENTS, AND ALL OTHER APPLICABLE CODES AND REQUIREMENTS. IF FIRE RISER IS LOCATED BELOW GRADE, ROUTE ALL DRAINS TO NEARBY FLOOR DRAIN. IF FIRE RISER IS LOCATED ABOVE GRADE, ROUTE ALL DRAINS TO OUTSIDE, UNLESS OTHERWISE NOTED.

*BACKFLOW PREVENTER OUTSIDE BUILDING IN VALVE BOX. REFER TO SEPARATE FIRE PROTECTION PLANS, CIVIL SITE UTILITY PLANS, AND SEPARATE SHELL CONSTRUCTION PACKAGE.

FIRE PROTECTION WATER ENTRY

NOT TO SCALE PD215

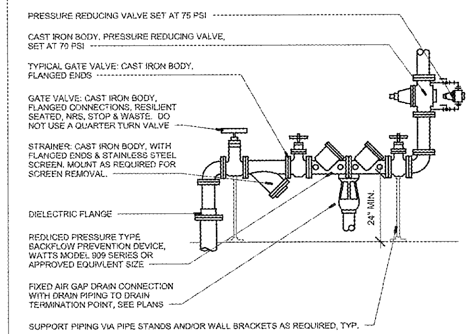

NOTE:
2 1/2" THRU 10" RPZ

DETAIL SHOWS GENERAL SCHEMATIC REQUIREMENTS. PROVIDE BACKFLOW PREVENTER OF TYPE & MANUFACTURER APPROVED BY LOCAL AUTHORITIES. PROVIDE PRESSURE REDUCING VALVE ONLY IF PRESSURE EXCEEDS 80 PSI - VERIFY. STRAINER AND REDUCING VALVE MAY BE INSTALLED IN VERTICAL PIPE IF SPACE LIMITATIONS REQUIRE IT. CLEAN STRAINER BEFORE TURNING BUILDING OVER TO OWNER. PROVIDE ANY REQUIRED CERTIFICATION OF TEST OF BACKFLOW PREVENTER TO LOCAL AUTHORITIES.

DOMESTIC WATER SERVICE ENTRY

NOT TO SCALE PD11

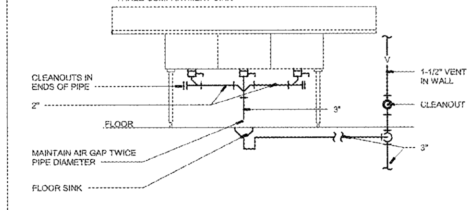

NOTES:
ROUTE COMBINED SANITARY DRAIN LINE TO WALL. ROUTE VENT UP AND SANITARY DOWN AS SHOWN ON PLANS.

ARRANGEMENT SHOWN IS SCHEMATIC. ADJUST TO SUIT FIELD CONDITIONS OR MEET LOCAL CODE REQUIREMENTS. HUBLESS CAST IRON PIPE, FITINGS AND CONNECTORS ALL AROUND SINK AND TRAP. CONNECT TRAP FROM CENTER COMPARTMENT.

3 COMPARTMENT SINK DETAIL

NOT TO SCALE PD74

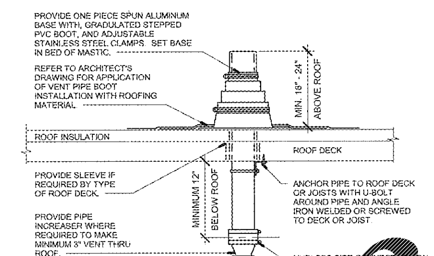

NOTE:
REFER TO PLANS FOR VENT THROUGH ROOF (VTR) PIPE SIZES AND LOCATIONS. LOCATE VTR MINIMUM TEN FEET HORIZONTAL OR THREE FEET VERTICAL ABOVE ANY BUILDING OPENING OR FRESH AIR INTAKE, AND ONE FOOT FROM ANY VERTICAL SURFACE. PROVIDE 1" FIBERGLASS INSULATION WITH ALL- SERVICE JACKET ON VENT PIPE INSIDE BUILDING WITHIN 5' OF THRU ROOF LOCATION. VERIFY FLASHING AND COUNTERFLASHING WITH ROOFING CONTRACTOR.

VENT THROUGH ROOF DETAIL

NOT TO SCALE

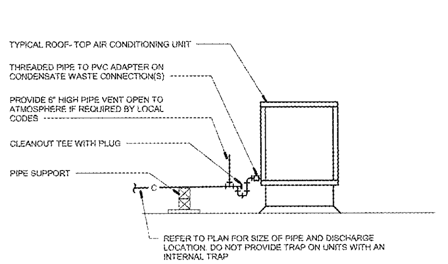

NOTE:
SLOPE CONDENSATE DRAIN AS MUCH AS POSSIBLE TOWARD DISCHARGE POINT. PROVIDE PROVIDE CLEANOUTS IN TURNS AND ENDS OF PIPE. USE SCHEDULE 40 PVC PIPE AND FITTINGS WITH SOLVENT WELD JOINTS. USE DWV FITTINGS FOR SIZES 1 1/4" AND LARGER.

PIPING ARRANGEMENT SHOWN IS SCHEMATIC. ADJUST AS REQUIRED TO SUIT ACTUAL CONDITIONS. REFER TO LOCAL CODE FOR INDIRECT DRAIN REQUIREMENTS.

ROOF-TOP UNIT CONDENSATE

NOT TO SCALE PD106

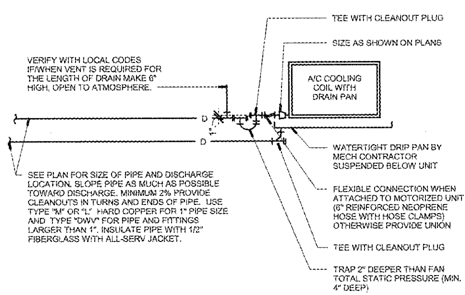

NOTE:
ARRANGEMENT SHOWN IS SCHEMATIC. COORDINATE WITH OTHER ITEMS. DISCHARGE INTO RECEPTOR WITH AIR GAP OF TWO PIPE DIAMETERS. REFER TO LOCAL CODE FOR INDIRECT DRAIN REQUIREMENTS. VERIFY ROUTING OF CONDENSATE BEFORE HANGING UNIT.

CONDENSATE DRAIN WITH OVERFLOW

NOT TO SCALE PD103

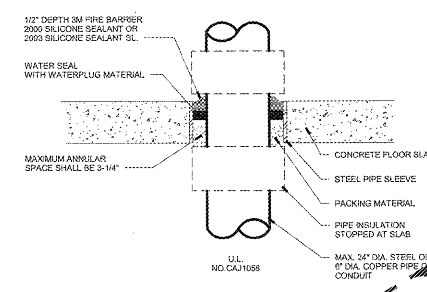

NOTES:
1.) MINIMUM FIRE RATING - 2 HOUR.
2.) FIRESTOP DETAILS SHALL MEET ASTM E814 AND ANSI/UL 1479 FIRE TESTS AS SPECIFIED.
3.) 3M FIRE PROTECTION PRODUCTS OR APPROVED EQUAL.

PIPE THROUGH CONCRETE FLOOR IN WET AREAS

NOT TO SCALE

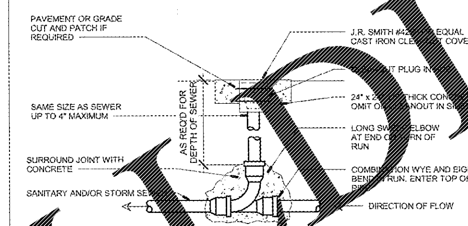

NOTE:
LOCATE EXTERIOR CLEANOUTS AT ENDS OF RUNS, AT TURNS OF PIPE GREATER THAN 45 DEGREES, AT MAXIMUM 100' INTERVALS ON STRAIGHT RUNS, AND WHERE SHOWN ON PLANS. VERIFY SOIL/ROCK CONDITIONS WITH GEOTECHNICAL REPORT OR SITE EXAMINATION. USE SCHEDULE-40 POLYVINYLCHLORIDE (PVC) PIPE & FITTINGS WITH SOLVENT WELD JOINTS. BACKFILL WITH CRUSHED ROCK TO COVER PIPE MINIMUM 6". PROVIDE BACKFILL & COMPACTION PER ARCHITECTURAL SPECS. REPAIR ANY SOD AND/OR PAVEMENT TO MATCH EXISTING.

EXTERIOR CLEANOUT

NOT TO SCALE PD79

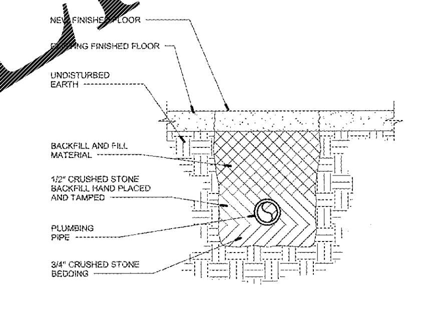

PIPE TRENCH DETAIL

NOT TO SCALE PD64

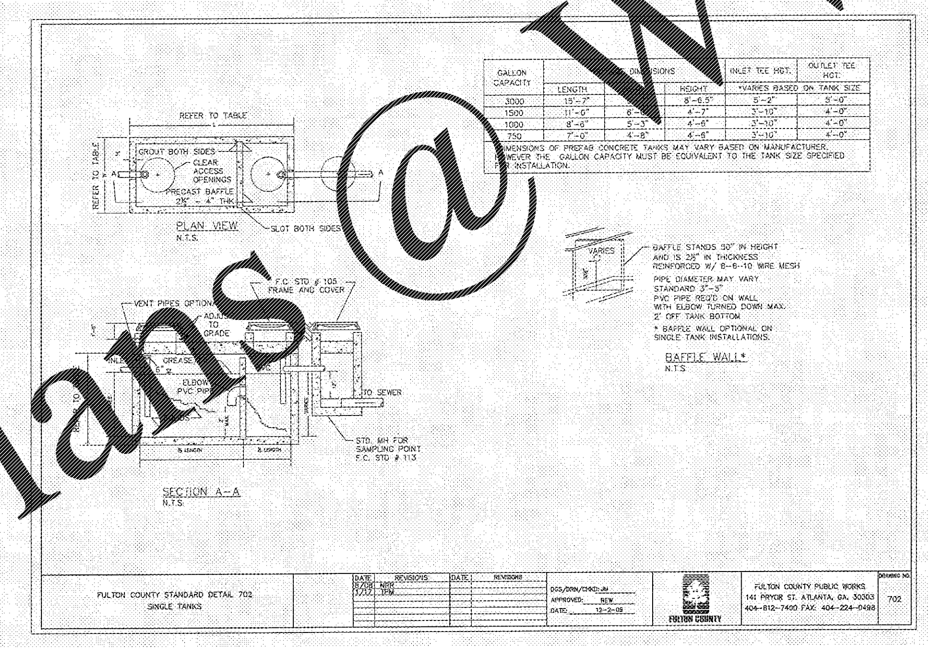

GALLON CAPACITY	LENGTH	[illegible]	HEIGHT	INLET TEE HGT. *VARIES BASED ON TANK SIZE	OUTLET TEE HGT.
3000	15'-7"	[illegible]	8'-6.5"	5'-2"	5'-0"
1500	11'-6"	6'-[illegible]	4'-7"	3'-10"	4'-0"
1000	8'-6"	5'-3"	4'-6"	3'-10"	4'-0"
750	7'-0"	4'-8"	4'-6"	3'-10"	4'-0"

DIMENSIONS OF PREFAB CONCRETE TANKS MAY VARY BASED ON MANUFACTURER. HOWEVER THE GALLON CAPACITY MUST BE EQUIVALENT TO THE TANK SIZE SPECIFIED FOR INSTALLATION.

NOTE:
DETAIL SHOWN FOR REFERENCE ONLY. GREASE TRAP IS BEING PROVIDED BY LANDLORD.
REFER TO SITE UTILITY PLANS FOR ADDITIONAL INFORMATION.
INSTALL PER LOCAL CODE REQUIREMENTS.

UNDERGROUND GREASE TRAP AND SAMPLING PORT DETAIL

NOT TO SCALE

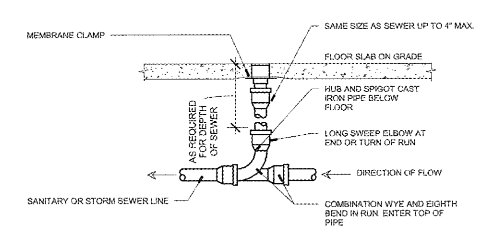

NOTE:
LOCATE AT BUILDING EXIT, AT ENDS OF RUNS, AT TURNS OF PIPE GREATER THAN 45 DEGREES, AT 50' INTERVALS ON STRAIGHT RUNS, AND WHERE SHOWN ON PLANS. PROVIDE BACKFILL PER ARCHITECTURAL SPECIFICATIONS. LOCATE CLEANOUTS WHERE THERE IS 18" CLEAR AROUND. CONSULT LOCAL CODES FOR OTHER FCO REQUIREMENTS.

PROVIDE ROUND SECURED NICKEL BRONZE ADJUSTABLE TOP WITH "CO" CAST IN COVER. PROVIDE CLEANOUT TOP WITH VARIATIONS SUITABLE FOR FLOOR COVERING (CARPET MARKER, RECESSED FOR TILE, SCORIATED FOR UNFINISHED FLOORS). PROVIDE BRONZE PLUG IN CAST IRON BODY.

FLOOR CLEANOUT

NOT TO SCALE PD78

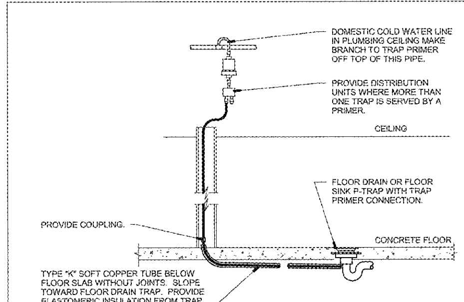

TRAP PRIMER DETAIL

NOT TO SCALE

GEORGIA REGISTERED No. PE033486 PROFESSIONAL ENGINEER TIM L SCOTT

SIGNATURE DATE:

GDS ENGINEERING
Gibbens, Drake, Scott, Inc.
9201 E. 63rd Street, Suite 100
Raytown, Missouri 64133
Phone: (816) 358-1790
Fax: (816) 358-2367
www.gdsengr.com
GEORGIA COA #PEF000263

SHEET LEGEND

G000's	GENERAL INFORMATION & SCOPE OF WORK
N100's	EGRESS / ADA PLANS & DETAILS
A100's	FLOOR PLANS & CEILING PLANS
A200's	EXTERIOR & INTERIOR ELEVATIONS
A300's	BUILDING SECTIONS
A400's	ENLARGED PLANS
A500's	EXTERIOR & INTERIOR DETAILS
A600's	DOOR SCHEDULE, DOOR DETAILS, FINISH SCHEDULE, FINISH PLANS
Q100's	AUDITORIUM SIGHT LINE SECTIONS
Q120's	AUDITORIUM SEATING PLAN
S's	STRUCTURAL
M's	MECHANICAL
P's	PLUMBING
E's	ELECTRICAL
WF's	WAYFINDING DETAILS
FS's	CASEWORK & EQUIPMENT

MADISON YARDS 8

AMC NEW BUILD
905 MEMORIAL DRIVE SE
ATLANTA, GA 30316

American Multi-Cinema, Inc.
One AMC Way
11500 Ash Street
Leawood, KS 66211

No.	Date	Description

Project Issue Date:

KEY PLAN:

THIS DRAWING IS A SINGLE PART OF AN INTEGRATED SET OF CONSTRUCTION CONTRACT DOCUMENTS. REFER TO DRAWING AND SPECIFICATION SHEETS INCLUDING, BUT NOT LIMITED TO, ALL "GENERAL CONDITIONS", "SUMMARY OF WORK", AND APPLICABLE SPECIFICATION SECTIONS WHICH APPLY TO THIS DRAWING. REFER TO ALL DOCUMENTS FOR THE COMPLETE SCOPE OF WORK. THE CONTRACTOR WILL BE RESPONSIBLE FOR ALL INFORMATION CONTAINED IN THE "SET" OF DOCUMENTS ISSUED. THIS DRAWING IS SCHEMATIC AND IS NOT TO BE USED AS A SHOP DRAWING. ALTERATIONS FROM THAT SHOWN REQUIRED TO COORDINATE WITH OTHER TRADES OR TO CONFORM TO ACTUAL SITE CONDITIONS ARE THE CONTRACTORS RESPONSIBILITY. VERIFY THE LOCATIONS OR DIMENSIONS OF ALL ARCHITECTURAL AND STRUCTURAL ELEMENTS WITH THE ARCHITECTURAL AND STRUCTURAL DRAWINGS ISSUED. THE SHOWING OF THESE ELEMENTS ARE FOR REFERENCE ONLY AND ARE TO BE VERIFIED PRIOR TO DESIGN OR CONSTRUCTION. NO LIABILITY IS ASSUMED BY THE INDICATION OF ELEMENTS IN THESE DRAWINGS. THE ACCOMPANYING PROFESSIONAL SEAL INDICATES THAT THE PERSON WHOSE NAME APPEARS ON THE SEAL HAS PREPARED OR SUPERVISED PREPARATION OF THE DOCUMENT ON WHICH THE SEAL APPEARS. THAT PERSON AND THE FIRM FOR WHICH THAT PERSON IS EMPLOYED BY DISCLAIM RESPONSIBILITY FOR ANY PORTIONS OF THE WORK ON WHICH THEIR SEAL DOES NOT APPEAR.

THIS DOCUMENT SHALL NOT BE USED FOR ANY OTHER PROJECTS, FOR ADDITIONS TO THIS PROJECT, OR FOR COMPLETION OF THIS PROJECT BY OTHERS WITHOUT THE PRIOR WRITTEN CONSENT OF GIBBENS DRAKE SCOTT. ANY INDIVIDUAL AND/OR COMPANY THAT USES THIS DOCUMENT UNAUTHORIZED, AGREES TO THE FULLEST EXTENT OF THE LAW, TO INDEMNIFY AND HOLD HARMLESS GIBBENS DRAKE SCOTT, INC., ITS OFFICERS, DIRECTORS AND EMPLOYEES AGAINST ANY DAMAGES, LIABILITIES OR COSTS, INCLUDING REASONABLE ATTORNEY'S FEES AND COSTS OF DEFENSE, ARISING OUT OF THE MISUSE OF THIS DOCUMENT.

THIS DRAWING COPYRIGHT 2018 ©

SHEET TITLE:
PLUMBING DETAILS

SHEET NUMBER:
P002

Order Plans @ www.LDILine.com