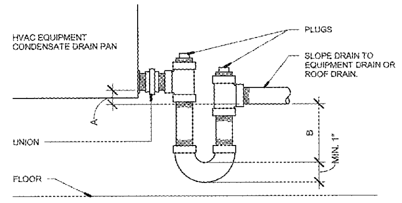

COIL CONFIGURATION	DIMENSION "A"	DIMENSION "B"
BLOW THROUGH COIL	1"	FAN DISCHARGE STATIC PRESSURE + 1"
DRAW THROUGH COIL	FAN SUCTION STATIC PRESSURE + 1"	2 1/2"

NOTE: MINIMUM "A" OR "B" DIMENSION SHALL NOT BE LESS THAN 1".

4 HVAC CONDENSATE TRAP DETAIL
NOT TO SCALE

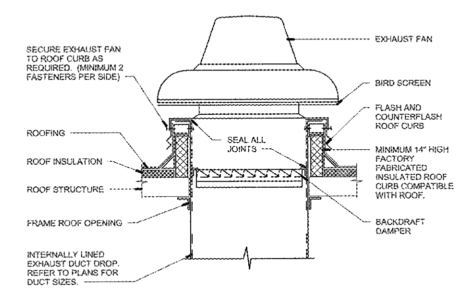

3 EXHAUST FAN DETAIL
NOT TO SCALE

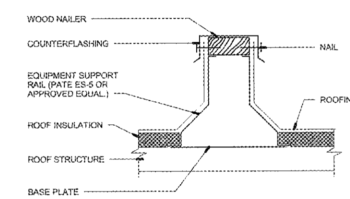

2 EQUIPMENT SUPPORT RAIL DETAIL
NOT TO SCALE

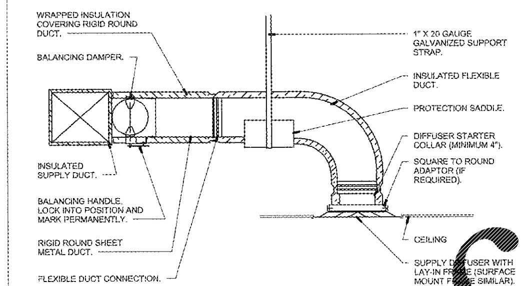

NOTES:
1.) PROVIDE AT FLEXIBLE DUCT CONNECTION METAL OR "PANDUIT" DRAWBAND ON THE INTERIOR FLEXIBLE DUCT HELIX. SECURE THE INSULATION OVER THE DRAW BAND WITH ADDITIONAL DRAWBAND.
2.) PROVIDE BEADING ON ROUND METAL DUCT 12" OR LARGER IN DIAMETER.
3.) PROVIDE MINIMUM 4" COLLARS FOR ATTACHMENT OF THE FLEXIBLE DUCT TO ROUND DUCT, DAMPERS AND DIFFUSERS.
4.) BAND RIGID ROUND DUCT INSULATION TO DUCT AND PROVIDE TAPE FOR INSULATION OVERLAP.

1 DIFFUSER CONNECTION DETAIL
NOT TO SCALE

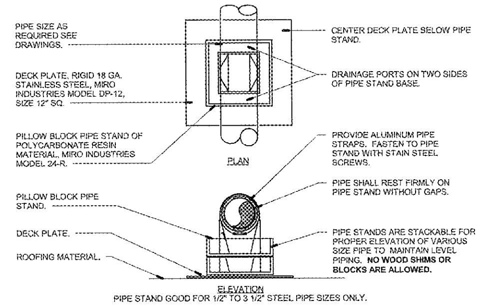

PIPE STAND GOOD FOR 1/2" TO 3 1/2" STEEL PIPE SIZES ONLY.

NOTE:
SUPPORT SPACING FOR PIPE SIZE: 1/2"=6'; 3/4"-1"=8'; 1 1/4"AND LARGER=10'; PLACE DECK PLATES ON ROOFING, SET PIPE STAND FREE ON DECK PLATES. STACK PIPE STAND WHERE REQUIRED TO ELEVATE PIPING. INSTALL GAS PIPE TO ALLOW FOR EXPANSION AND CONTRACTION. PRIMER COAT AND PAINT EXTERIOR GAS PIPE LIGHT GREEN COLOR.

8 ROOF BLOCKING PIPE SUPPORT DETAIL
NOT TO SCALE

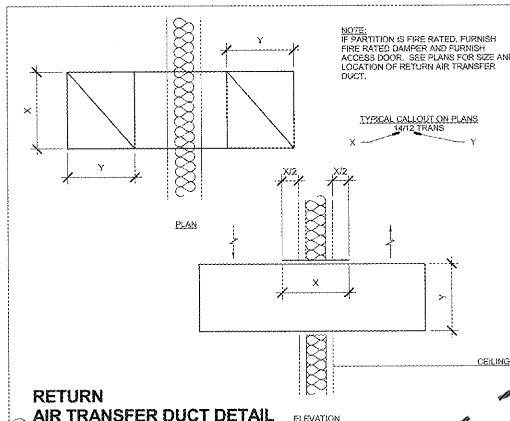

NOTE:
IF PARTITION IS FIRE RATED, FURNISH FIRE RATED DAMPER AND FURNISH ACCESS DOOR. SEE PLANS FOR SIZE AND LOCATION OF RETURN AIR TRANSFER DUCT.

TYPICAL CALLOUT ON PLANS
14/12 TRANS
X Y

7 RETURN AIR TRANSFER DUCT DETAIL
NOT TO SCALE

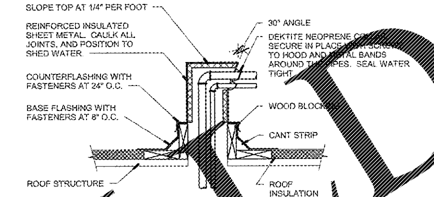

6 REFRIGERANT PIPE ROOF PENETRATION DETAIL
NOT TO SCALE

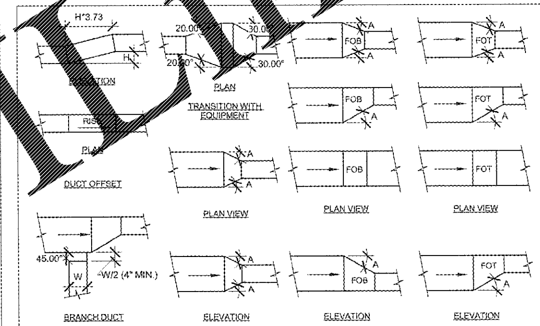

NOTES:
1.) ANGLE A = 30° WHEN AIR FLOWS IN DIRECTION OF ARROW (SUPPLY AIR).
2.) ANGLE A = 15° WHEN AIR FLOWS IN OPPOSITE DIRECTION OF ARROW (RETURN OR EXHAUST).

5 LOW VELOCITY DUCT FITTINGS DETAIL
NOT TO SCALE

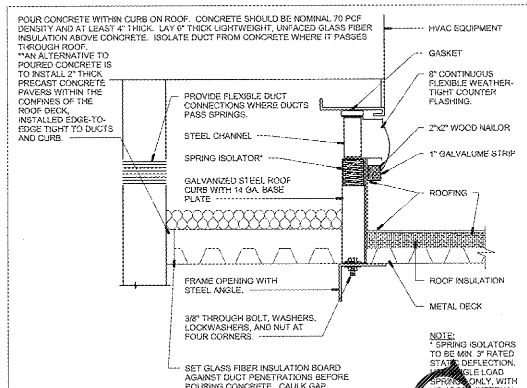

NOTE:
* SPRING ISOLATORS TO BE MIN. 3" RATED STATIC DEFLECTION. USE SINGLE LOAD SPRINGS ONLY, WITH NO ADDED INTERNAL DAMPING SPRINGS.

11 ROOFTOP UNIT CURB DETAIL
NOT TO SCALE

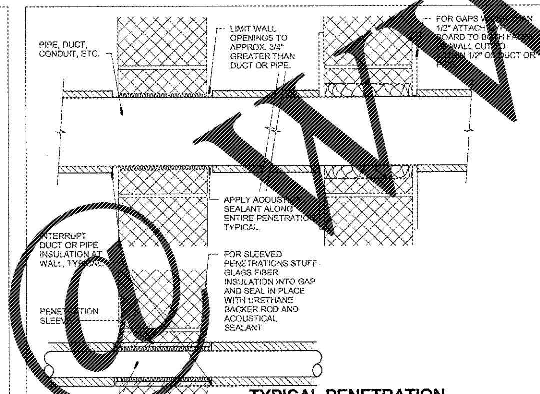

12 TYPICAL PENETRATION DETAILS - CONCRETE PARTITIONS
NOT TO SCALE

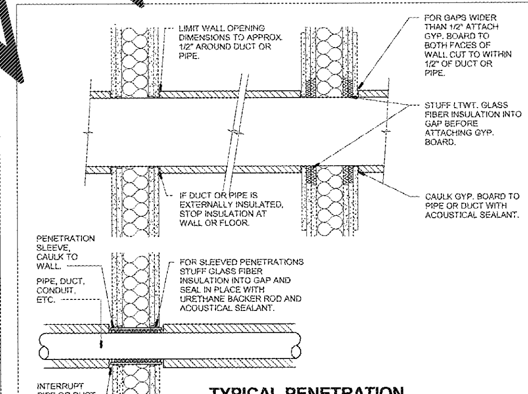

13 TYPICAL PENETRATION DETAILS - DRYWALL/STUD PARTITIONS
NOT TO SCALE

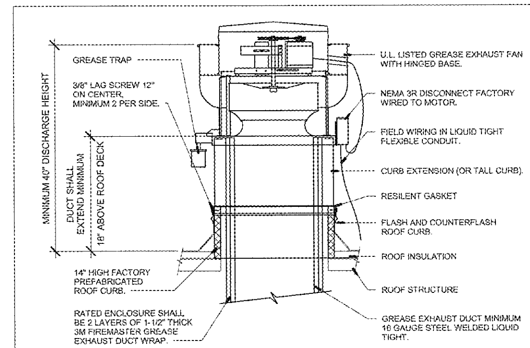

NOTES:
- INSTALLATION SHALL BE IN ACCORDANCE WITH NFPA 96 REQUIREMENTS.
- TEST GREASE DUCT WITH SMOKE OR LIGHT IN ACCORDANCE WITH LOCAL CODE PRIOR TO APPLICATION OF DUCT WRAP.

9 ROOF MOUNTED GREASE EXHAUST FAN DETAIL
NOT TO SCALE

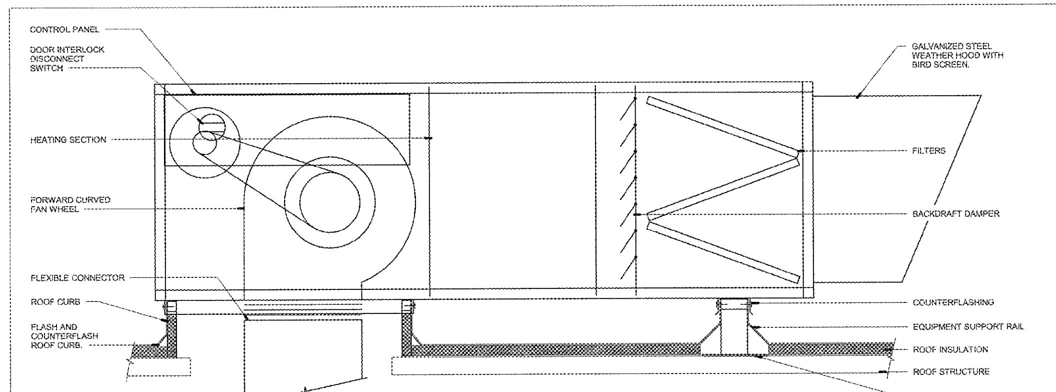

10 ROOF MOUNTED MAKEUP AIR UNIT DETAIL
NOT TO SCALE

THIS DRAWING IS A SINGLE PART OF AN INTEGRATED SET OF CONSTRUCTION CONTRACT DOCUMENTS. REFER TO DRAWING AND SPECIFICATION SHEETS INCLUDING, BUT NOT LIMITED TO, ALL "GENERAL CONDITIONS", "SUMMARY OF WORK", AND APPLICABLE SPECIFICATION SECTIONS WHICH APPLY TO THIS DRAWING. REFER TO ALL DOCUMENTS FOR THE COMPLETE SCOPE OF WORK. THE CONTRACTOR WILL BE RESPONSIBLE FOR ALL INFORMATION CONTAINED IN COMPLETE DOCUMENTS ISSUED. THIS DRAWING IS SCHEMATIC AND IS NOT TO BE USED AS A SHOP DRAWING. ALTERATIONS FROM THAT SCHEMATIC AND IS NOT TO BE USED AS A SHOP DRAWING. ALTERATIONS FROM THAT SHOWN REQUIRED TO COORDINATE WITH OTHER TRADES OR TO CONFORM TO ACTUAL SITE CONDITIONS ARE THE CONTRACTOR'S RESPONSIBILITY. VERIFY THE LOCATIONS OF DIMENSIONS OF ALL ARCHITECTURAL AND STRUCTURAL ELEMENTS WITH THE ARCHITECTURAL AND STRUCTURAL DRAWINGS ISSUED. THE SHOWING OF THESE ELEMENTS ARE FOR REFERENCE ONLY AND ARE TO BE VERIFIED PRIOR TO DESIGN OR CONSTRUCTION. NO LIABILITY IS ASSUMED BY THE INDICATION OF ELEMENTS IN THESE DRAWINGS. THE ACCOMPANYING PROFESSIONAL SEAL INDICATES THAT THE PERSON WHOSE NAME APPEARS ON THE SEAL HAS PREPARED OR SUPERVISED PREPARATION OF THE DOCUMENT ON WHICH THE SEAL APPEARS. THAT PERSON AND THE FIRM FOR WHICH THAT PERSON IS EMPLOYED BY DISCLAIM RESPONSIBILITY FOR ANY PORTIONS OF THE WORK ON WHICH THEIR SEAL DOES NOT APPEAR.

THIS DOCUMENT SHALL NOT BE USED FOR ANY OTHER PROJECTS, FOR ADDITIONS TO THIS PROJECT, OR FOR COMPLETION OF THIS PROJECT BY OTHERS WITHOUT THE PRIOR WRITTEN CONSENT OF GIBBENS DRAKE SCOTT. ANY INDIVIDUAL AND/OR COMPANY THAT USES THIS DOCUMENT UNAUTHORIZED, AGREES TO THE FULLEST EXTENT OF THE LAW, TO INDEMNIFY AND HOLD HARMLESS GIBBENS DRAKE SCOTT, INC., ITS OFFICERS, DIRECTORS AND EMPLOYEES AGAINST ANY DAMAGES, LIABILITIES OR COSTS, INCLUDING REASONABLE ATTORNEY'S FEES AND COSTS OF DEFENSE, ARISING OUT OF THE MISUSE OF THIS DOCUMENT.

THIS DRAWING COPYRIGHT 2018 ©

GEORGIA REGISTERED No. PE033496 PROFESSIONAL ENGINEER TIM L SCOTT
5-22-18

SIGNATURE DATE:

GDS ENGINEERING
Gibbens, Drake, Scott, Inc.
9201 E. 63rd Street, Suite 100
Raytown, Missouri 64133
Phone: (816) 358-1790
Fax: (816) 358-2367
www.gdsengr.com
GEORGIA COA #PEF000263

SHEET LEGEND

G000's	GENERAL INFORMATION & SCOPE OF WORK
N100's	EGRESS / ADA PLANS & DETAILS
A100's	FLOOR PLANS & CEILING PLANS
A200's	EXTERIOR & INTERIOR ELEVATIONS
A300's	BUILDING SECTIONS
A400's	ENLARGED PLANS
A500's	EXTERIOR & INTERIOR DETAILS
A600's	DOOR SCHEDULE, DOOR DETAILS, FINISH SCHEDULE, FINISH PLANS
Q100's	AUDITORIUM SIGHT LINE SECTIONS
Q120's	AUDITORIUM SEATING PLAN
S's	STRUCTURAL
M's	MECHANICAL
P's	PLUMBING
E's	ELECTRICAL
WF's	WAYFINDING DETAILS
FS's	CASEWORK & EQUIPMENT

MADISON YARDS 8
AMC NEW BUILD
905 MEMORIAL DRIVE SE
ATLANTA, GA 30316

amc
American Multi-Cinema, Inc.
One AMC Way
11500 Ash Street
Leawood, KS 66211

No.	Date	Description

Project Issue Date:

KEY PLAN:

SHEET TITLE:
MECHANICAL DETAILS

SHEET NUMBER:
M001

Order Plans @ WWW.LDILine.com