SCHMIDT
CONSULTING GROUP, INC.
MECHANICAL ELECTRICAL STRUCTURAL
COMMUNICATIONS INDUSTRIAL
ALABAMA LICENSE NUMBER 2542
901 W. Garden St. Pensacola FL 32502
P: 850.436.0000 F: 850.432.6431
WILLIAM JOSEPH JONES P.E.
ALABAMA LICENSE NUMBER 25171
SCG PROJECT: 2016-151

## GENERAL NOTES

1. PROVIDE WATER HAMMER ARRESTERS ON HOT & COLD WATER SUPPLY BRANCHES SERVING SINGULAR, MULTIPLE OR GROUPS OF PLUMBING FIXTURES. ADHERENCE TO THE PLUMBING AND DRAINAGE INSTITUTE STANDARD P.D.I.-WH201 (PER SPECIFICATIONS) SHALL BE EMPLOYED IN DETERMINING PROPER SIZE, SELECTION, PLACEMENT, LOCATION AND INSTALLATION OF ARRESTERS.
2. SEE PLANS FOR MORE PIPE SIZES.
3. PIPE OFFSETS/JOGS [illegible] RISER ARE POSSIBLE. LOCATIONS OF WHERE PIPE WILL NEED TO BE JOGGED TO AVOID DUCTWORK, ACTUAL PIPE ROUTING MAY DIFFER FROM WATER RISER DIAGRAM INDICATES.
4. FOR [illegible] SIZE WATER LINES TO FIXTURE AND CONNECTION MANUFACTURER RECOMMENDATIONS.

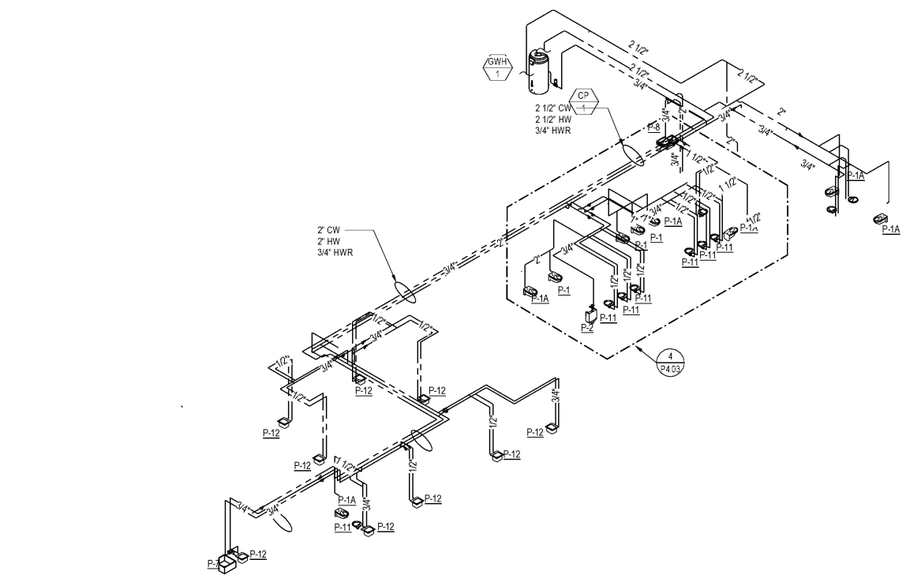


1 OVERALL DOMESTIC WATER RISER DIAGRAM
NOT TO SCALE

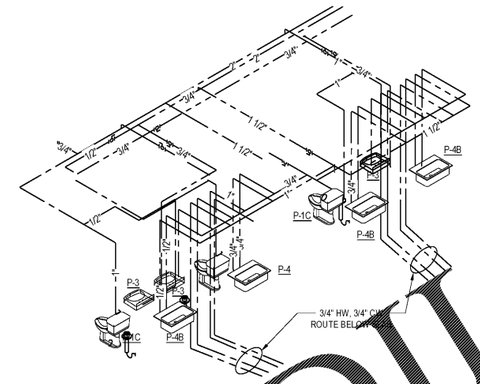


2 WATER RISER 106 & 108
NOT TO SCALE

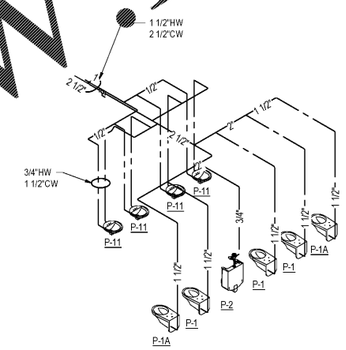


3 WATER RISER 116 & 118
NOT TO SCALE

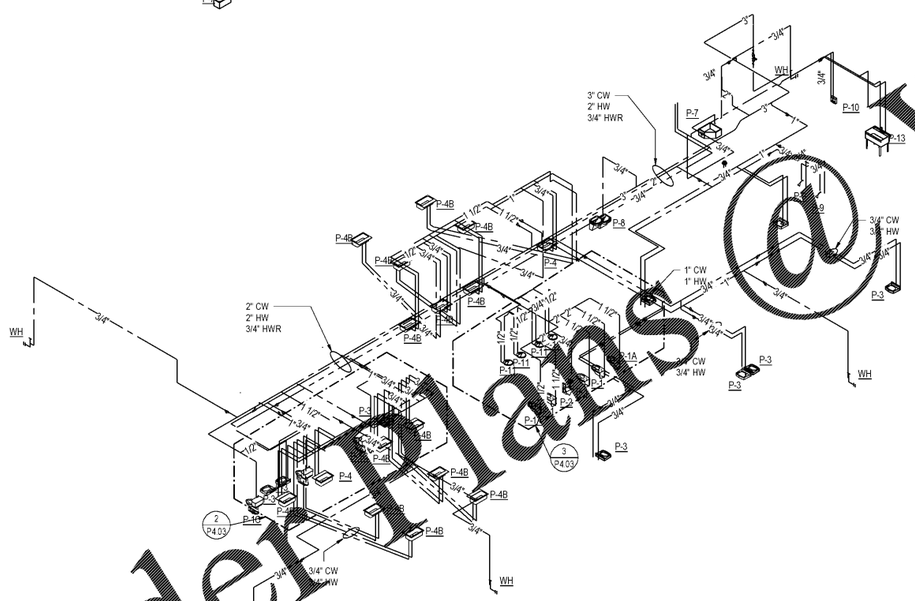


4 WATER RISER 232 &234
NOT TO SCALE

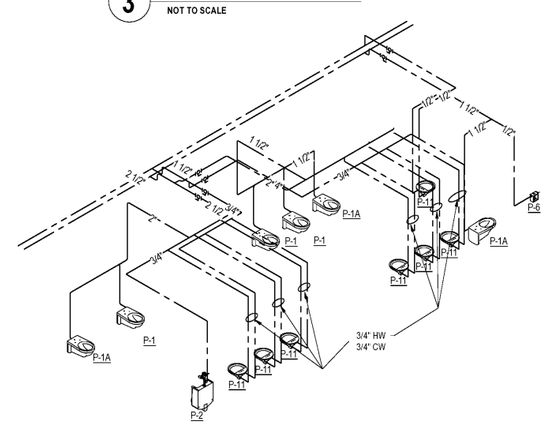


GMC
27011st Avenue S
Birmingham, AL 35233
T 205.879.4462
GMCNETWORK.COM

| ISSUE | DATE |
|---|---|
| ISSUE FOR BID | 2018.05.25 |

DRAWN BY: CAD
CHECKED BY: WJJ

SIMULATION LABORATORY
BUILDING - USA JOB #16-07
MOBILE, ALABAMA
**ABC #2017372**
**GMC # AMOB160019**

ALABAMA LICENSED 25171 PROFESSIONAL ENGINEER WILLIAM JOSEPH JONES

**RISER DIAGRAMS**

# P4.03

sheet of

5/21/2018 12:26:50 PM

Order Plans @ www.LDILinc.com