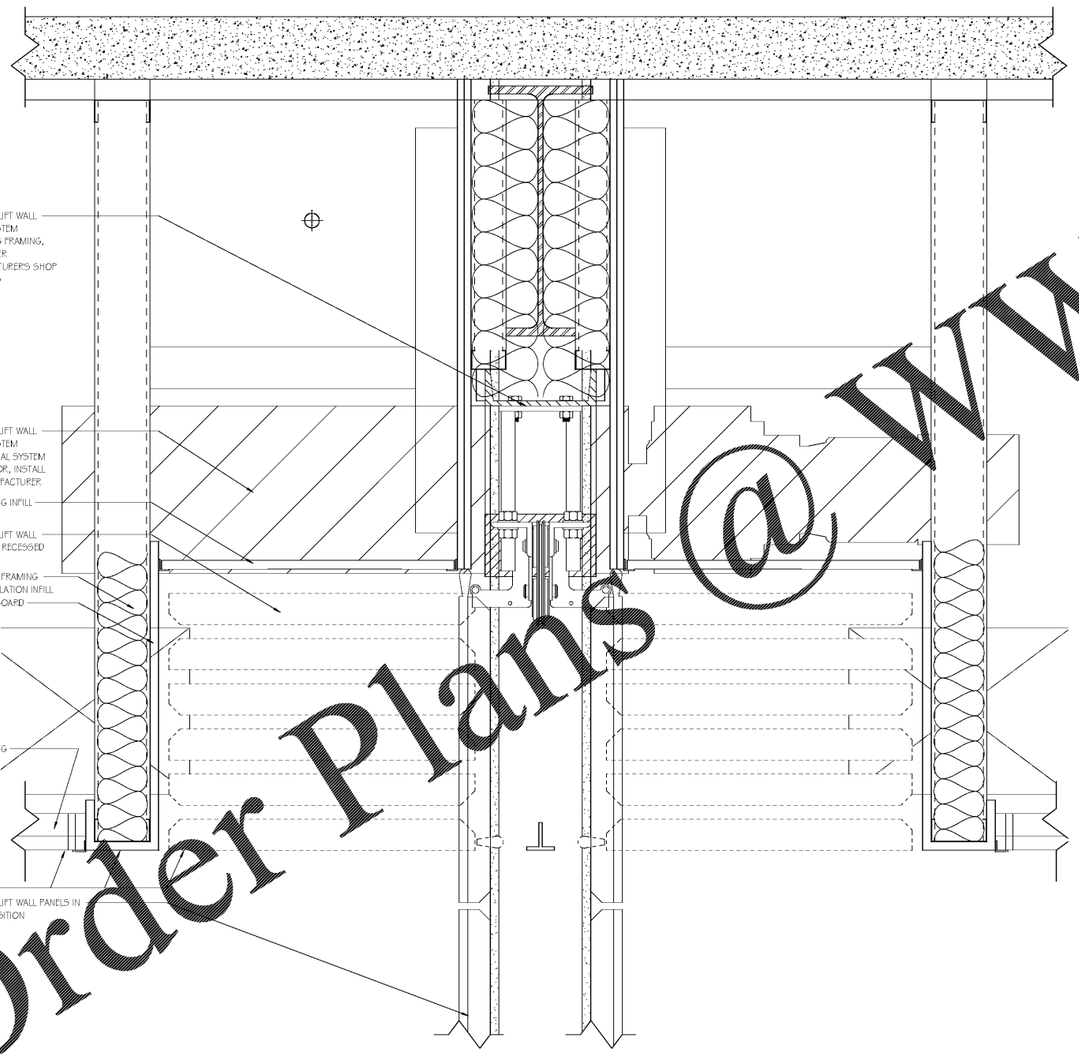


**A1** VERTICAL LIFT WALL POCKET DETAIL
SCALE: 3" = 1'-0"

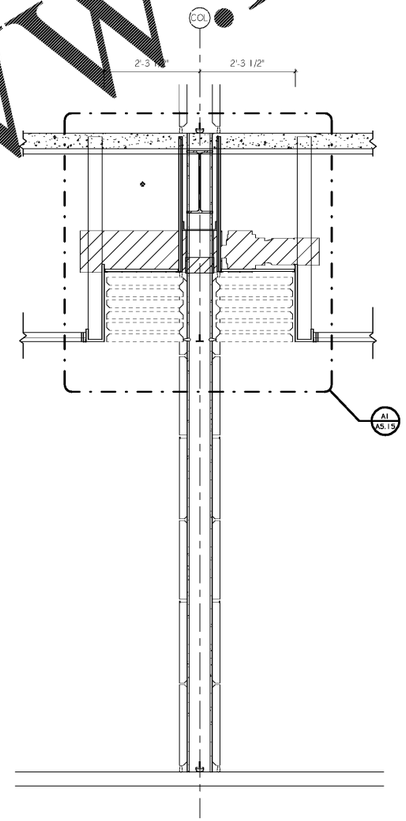


**A9** VERTICAL LIFT WALL SECTION
SCALE: 3/4" = 1'-0"

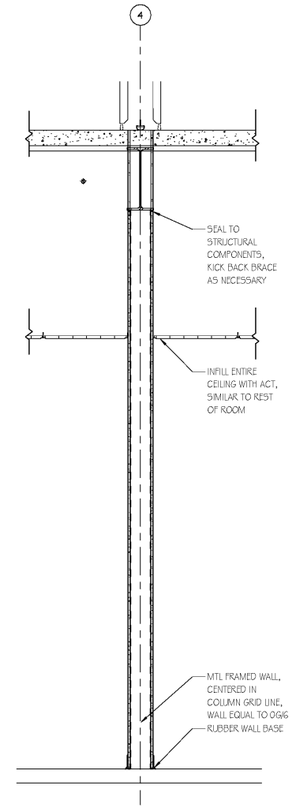


VERTICAL LIFT WALL BETWEEN RM107 & RM109 IS AN ALTERNATE, THIS IS THE BASE BID AT THAT LOCATION

**A10** BASE BID @ ALTERNATE LOCATION
SCALE: 3/4" = 1'-0"

GMC
2701 1st Avenue S
Birmingham, AL 35233
T 205.879.4462
GMCNETWORK.COM

| ISSUE | DATE |
|---|---|
| ISSUE FOR BID | 2018.05.25 |

DRAWN BY: MDLS/QG
CHECKED BY: MC/SG/JW

SIMULATION LABORATORY
BUILDING - USA JOB #16-07
MOBILE, ALABAMA
ABC #2017372
GMC # AMOB160019

STATE OF ALABAMA
REGISTERED ARCHITECT

SECTION DETAILS

A5.15
sheet of

Order Plans @ WWW.LDILine.com

5/25/2018 4:13:23 PM