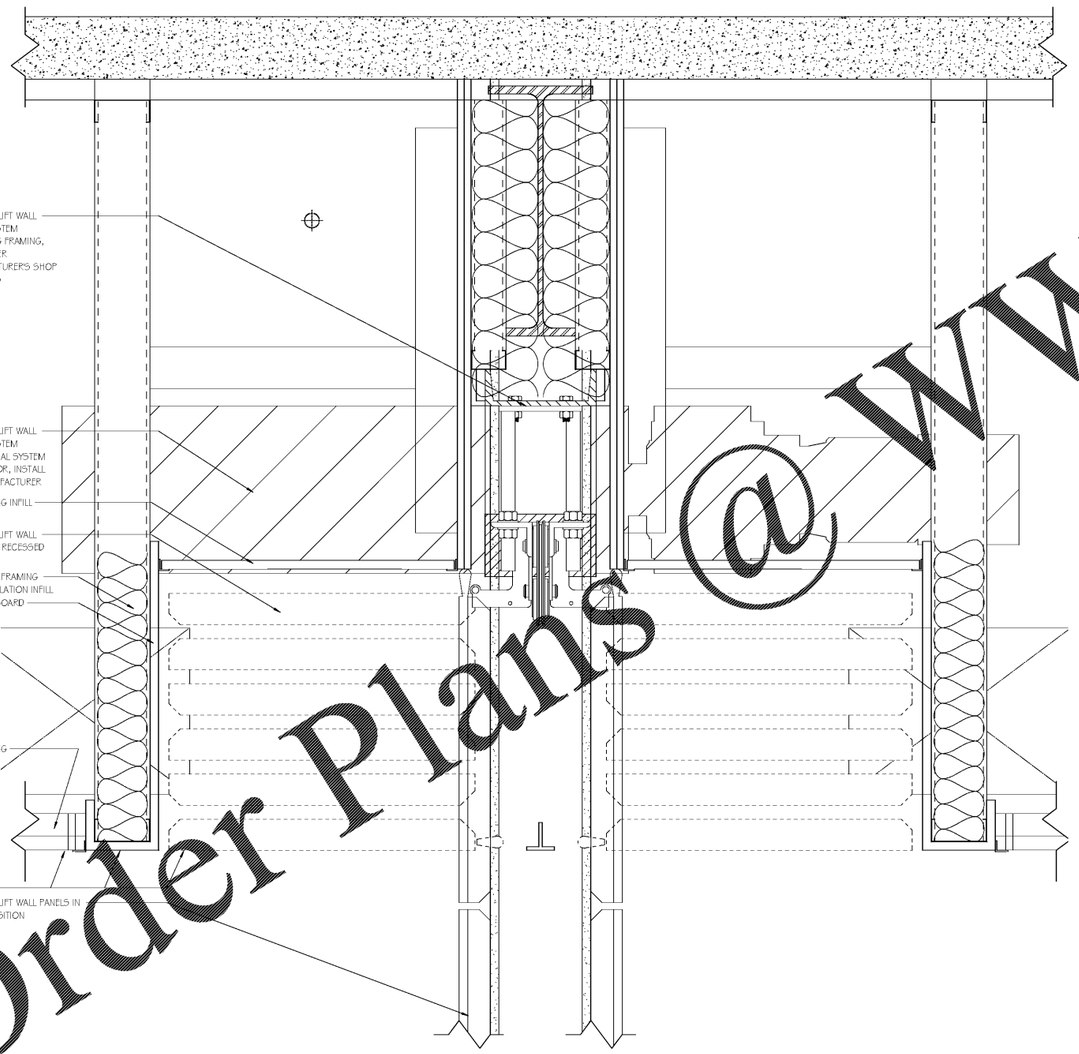

A1 VERTICAL LIFT WALL POCKET DETAIL
SCALE: 3" = 1'-0"

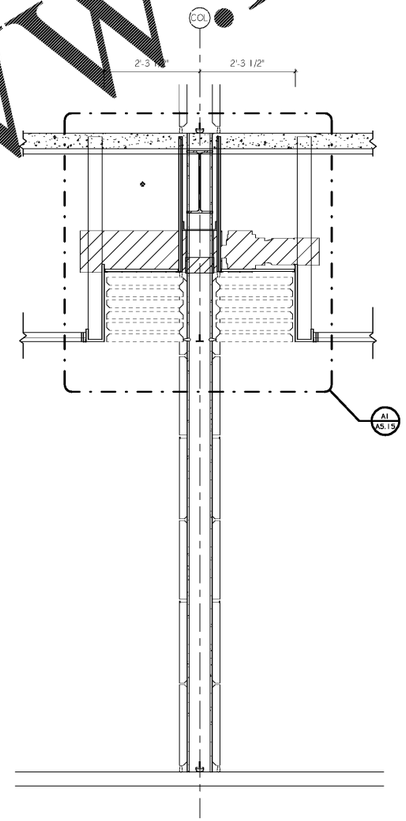

A9 VERTICAL LIFT WALL SECTION
SCALE: 3/4" = 1'-0"

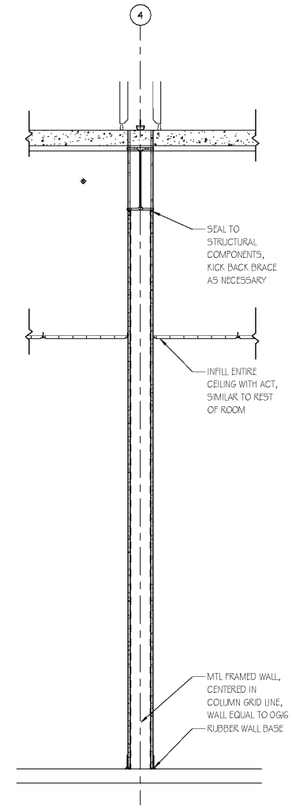

VERTICAL LIFT WALL BETWEEN RM107 & RM109 IS AN ALTERNATE, THIS IS THE BASE BID AT THAT LOCATION

A10 BASE BID @ ALTERNATE LOCATION
SCALE: 3/4" = 1'-0"

GMC
2701 1st Avenue S
Birmingham, AL 35233
T 205.879.4462
GMCNETWORK.COM

ISSUE	DATE
ISSUE FOR BID	2018.05.25

DRAWN BY: MDLS/QG
CHECKED BY: MC/SG/JW

SIMULATION LABORATORY
BUILDING - USA JOB #16-07
MOBILE, ALABAMA
ABC #2017372
GMC # AMOB160019

STATE OF ALABAMA
REGISTERED ARCHITECT

SECTION DETAILS

A5.15
sheet of

5/25/2018 4:13:23 PM

Order Plans @ WWW.LDILine.com