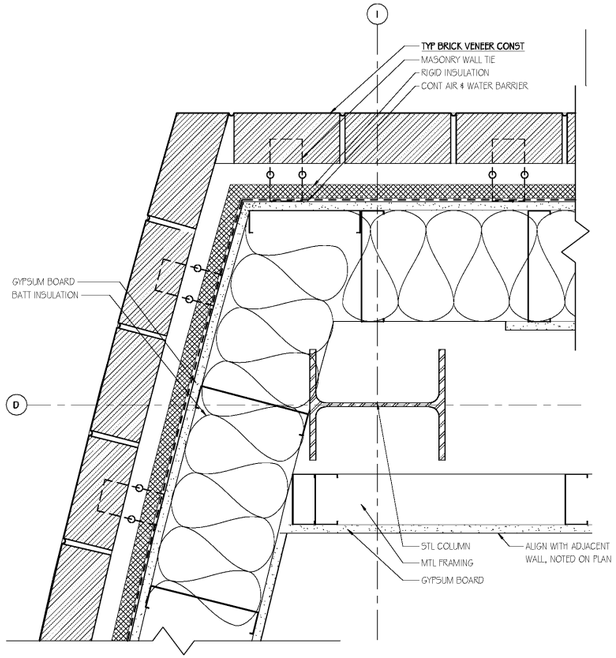

F1 FRONT ENTRY CORNER
SCALE: 3" = 1'-0"

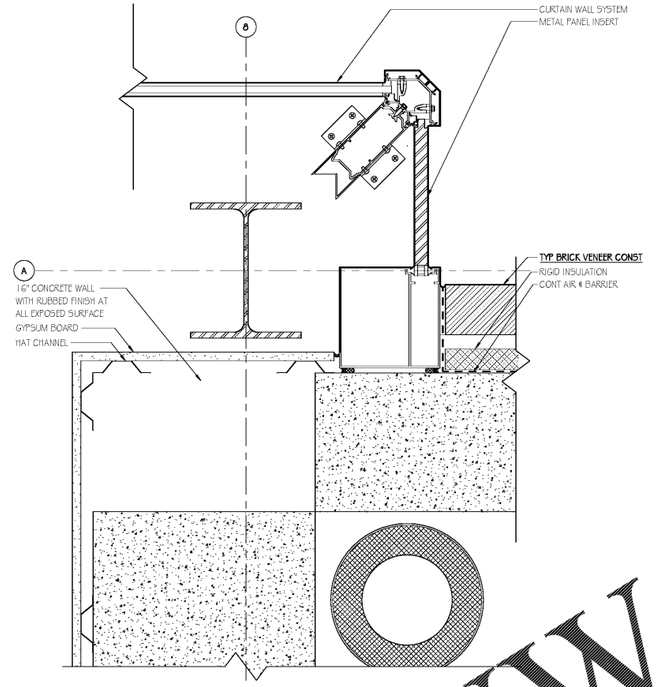

F5 EXT - CIP CORNER
SCALE: 3" = 1'-0"

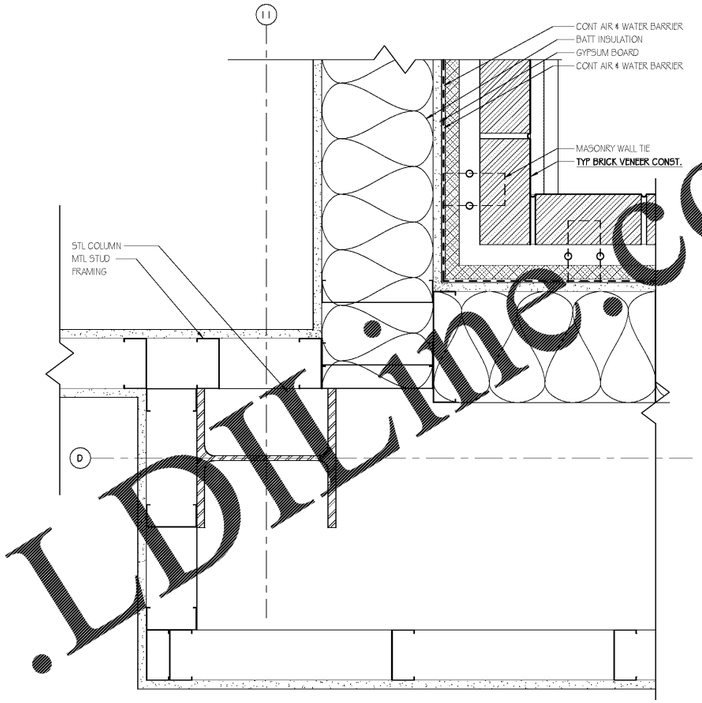

F9 CMU OVERHANG
SCALE: 3" = 1'-0"

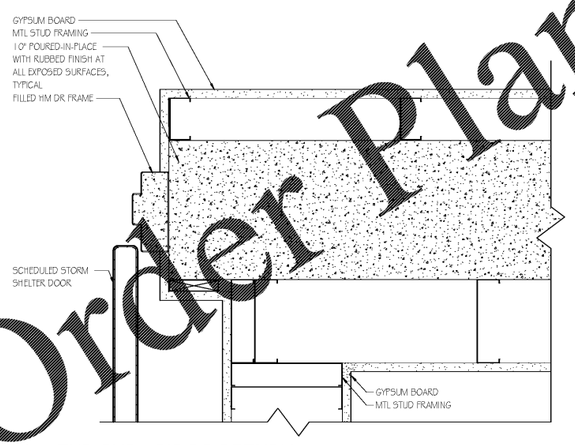

A1 TYP GYP - CIP DR RETURN
SCALE: 3" = 1'-0"

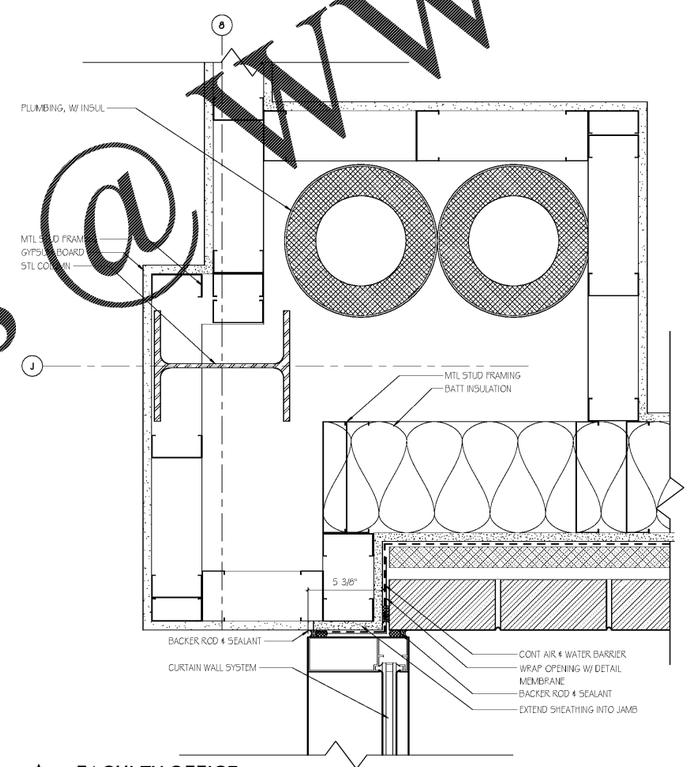

A5 FACULTY OFFICE
SCALE: 3" = 1'-0"

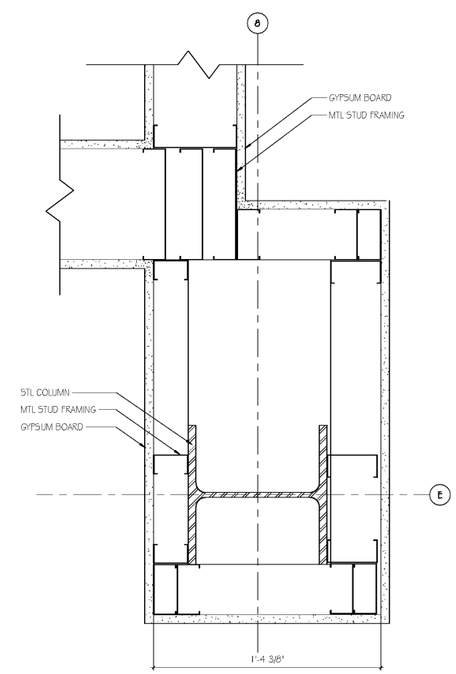

A9 CORNER COLUMN
SCALE: 3" = 1'-0"

GMC
2701 1st Avenue S
Birmingham, AL 35233
T 205.879.4462
@GMCNETWORK.COM

ISSUE	DATE
ISSUE FOR BID	2018.05.25

DRAWN BY: MDLS/OG
CHECKED BY: MC/SG/JW

SIMULATION LABORATORY
BUILDING - USA JOB #16-07
MOBILE, ALABAMA
ABC #2017372
GMC # AMOB160019

STATE OF ALABAMA
REGISTERED ARCHITECT

PLAN DETAILS

A1.22
sheet ___ of ___

5/25/2018 4:10:55 PM

Order Plans @ www.LDILine.com