Item	RIC	Lucky's	REM	MC	EC	Comments
E2 Controller			x			
Electric Defrost Panel			x			
Parallel Compressor Racks with integral electric defrost panels on a unitized frame assembly with prewired CPC CX-400 controller and controls as specified			x			
Rooftop Air-cooled condenser with prewired CPC controls as specified			x			
Manufactured Walk-in Coolers, Walk-in Freezers, and Enclosed Refrigerated Prep Rooms		x				
Walk-in Cooler, Walk-in Freezers, and Enclosed Refrigerated Prep Rooms		x				
Refrigerated cases with hard wired CPC temperature sensors					x	
Loose CPC equipment for refrigeration			x			
Miscellaneous temperature sensors and refrigerant leak transducers			x			
Walk-in cooler/Walk-in Freezer/Refrigerated Prep Room:			x			
CPC temperature sensors and refrigerant leak detection			x			
Door switches as specified			x			
Leak detection shutdown system components as specified			x			
CPC ambient temperature sensors			x			
CPC Equipment for Mechanical/Electrical			x			
Multi-flex I/O boards with enclosures and transformers			x			
Space temperature sensors			x			
Drew point temperature sensors			x			
Light level sensor			x			
Ambient temperature sensor			x			
Mechanical equipment airflow switches and KEH hood interlocks		x				
Mechanical equipment motor starters		x				
Electrical lighting contractor		x				
Field control wiring between:						
CPC E2 CX-400 controller and Multi-flex I/O boards (Refrigeration)	x					
CPC Multi-flex I/O boards and sensors (Refrigeration)	x					
CPC Multi-flex I/O boards and output controls (Refrigeration)	x					
CPC E2 CXC-400E controllers, Multi-flex I/O boards, and Multi-flex RTU Boards (Mechanical/Electrical)	x					
CPC Multi-flex I/O boards and sensors (Mechanical)	x					
CPC Multi-flex RTU boards and sensors (Mechanical)	x					
CPC Multi-flex I/O boards and sensors (Electrical)	x					
CPC Multi-flex I/O boards and output controls (Mechanical)	x					
CPC Multi-flex RTU boards and output controls (Mechanical)	x					
CPC Multi-flex I/O boards and output controls (Electrical)	x					
Power Wiring for:						
All Parallel compressor racks with integral electric defrost panels					x	
All secondary chilled fluid pump stations						
all rooftop air-cooled condensers					x	
Walk-in cooler, Walk-in freezer, and Refrigerated prep room evaporators					x	
Refrigerated cases, door strobes, leak strobes, and LLSV's					x	
All CPC E2E controllers, facility status display, Multi-flex I/O boards, and Multi-flex RTU boards					x	

COMMENTS

1. See wiring terminations for details
2. Lucky's shall have separate installation contractor from RIC for equipment installation.
3. EC shall furnish and install conduit with pull string from all CPC E2 controllers to the Ethernet hub provided and installed by the Lucky's Data/Comm Contractor. Lucky's Data/Comm contractor shall install and terminate the required CAT5e cable from these devices to the Ethernet hub.
4. EC shall install conduit with pull string between all CPC E2 controllers/Multi-Flex I/O boards/Multi-flex RTU boards/sensors/output controls either factory installed in RTU, parallel compressor Rack A or field installed by the RIC. The RIC shall furnish, install, and terminate the specified network communications, sensor and control wiring between these components.

LEGNED

Lucky's	Lucky's Marketplace
RIC	Refrigeration Installation Contractor
REM	Refrigeration Equipment Manufacturer
RCM	Refrigeration Case Manufacturer
ESM	Electrical Switchgear Manufacturer
MC	Mechanical Contractor
EC	Electrical Contractor
PC	Plumbing Contractor
F	Finish
I	Install
FIR	Furnish and install Raceways with Pull Strings (Conduits)
FIC	Furnish and Install Conduits (Wiring)
TL	Termination of Line Conduits
TC	Termination of Control Conductors

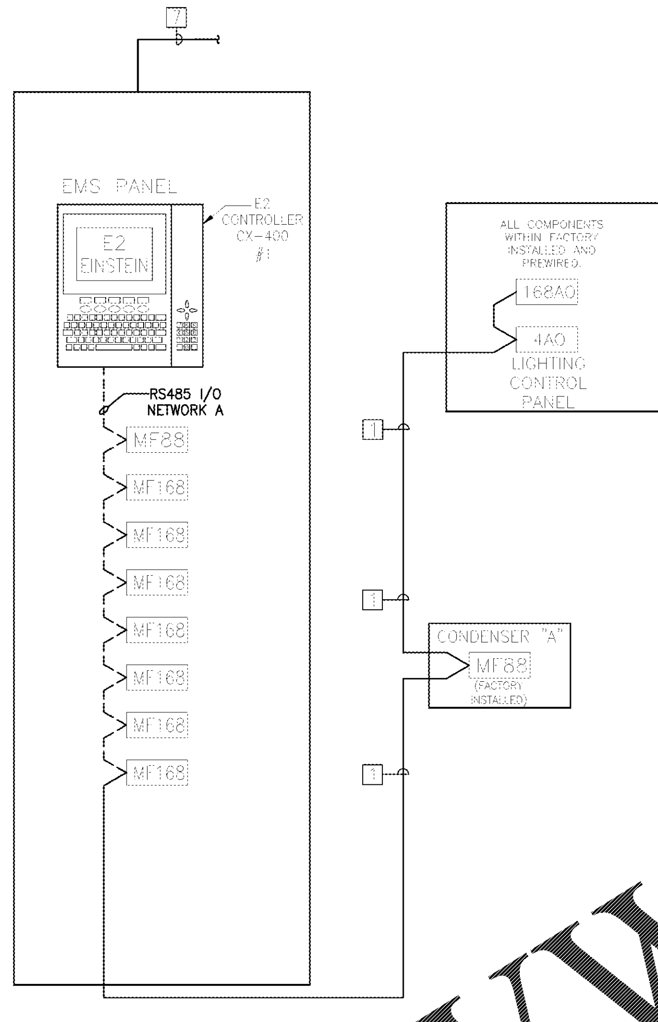

SYMBOL	DESCRIPTION
EC	ELECTRICAL CONTRACTOR
MF88	CPC INPUT (8) / RELAY OUTPUT (8) BOARD
MF16	CPC INPUT (16) BOARD
MF168	CPC INPUT (16) / RELAY OUTPUT (8) BOARD
8RO	CPC (8) RELAY OUTPUT BOARD
1	EMS WIRE TYPE

1 – BELDEN #8761 (2 #22 SHIELDED CABLE)
2 – BELDEN #8760 (2 #18 SHIELDED CABLE)
3 – BELDEN #8771 (3 #22 SHIELDED CABLE)
4 – BELDEN #8729 (4 #22 SHIELDED CABLE)
5 – 2 #14
6 – 2 #12
7 – 120V, 1Ø, DEDICATED POWER BY EC
8 – 208V, 3Ø, DEDICATED POWER BY EC
9 – ECHELON NETWORK WIRING. ONE (1) PAIR CPC PART #135–2300 (NON–PLENUM) AND #135–2301 (PLENUM)
10 – CAT 5E CABLE.
11 – 208V, 1Ø, DEDICATED POWER BY EC

NOTES:
ALL CONDUIT AND POWER WIRING FURNISHED BY E.C. ALL 120V/1Ø OR 208V/1Ø CONTROL WIRING SHALL BE IN CONDUIT. ALL LOW VOLTAGE CONTROL/SENSOR WIRING SHALL BE IN CONDUIT. THE 120V/1Ø OR 208V/1Ø CONTROL WIRING SHALL NOT BE RUN IN THE SAME CONDUIT AS THE LOW VOLTAGE CONTROL/SENSOR WIRING.

CABLE LEGEND:
– – – WIRING INSTALLED BY THE EC IN CONDUIT
——— WIRING FACTORY INSTALLED

INSTALLATION NOTES

1. THE ELECTRICAL CONTRACTOR SHALL PROVIDE ALL CONDUITS FOR EMS CONTROL WIRING.
2. ALL CASES COME WITH FACTORY INSTALLED TEMPERATURE SENSORS AND DEFROST TERMINATION SENSORS. IN WALK–IN FREEZER AND COOLER BOXES THE REFRIGERATION CONTRACTOR SHALL INSTALL AND WIRE SENSORS WITH THE ELECTRICAL CONTRACTOR TO PROVIDE CONDUIT.
3. THE ELECTRICAL CONTRACTOR SHALL PROVIDE LINE VOLTAGE POWER TO THE FIRST CASE IN THE SYSTEM. FINAL CONNECTION TO THE CASE AND WIRING TO ADDITIONAL CASES ONT THE SAME SYSTEM SHALL BE BY RC.
4. THE ELECTRICAL CONTRACTOR SHALL PROVIDE FIELD INSTALLED DISCONNECT SWITCHES, SAFETY SWITCHES AND SWITCHES. SEE ELECTRICAL PLANS FOR DETAILS.
5. THE REFRIGERATION CONTRACTOR SHALL INSTALL ALL HVAC SENSORS AND PROVIDE WIRING.
6. THE ELECTRICAL CONTRACTOR SHALL PROVIDE CONDUIT FOR THE REFRIGERATION CONTROLS AS SHOWN ON THE PLAN. THE REFRIGERATION CONTRACTOR SHALL PROVIDE ALL WIRING FOR REFRIGERATION CONTROLS AND MAKE FINAL CONNECTIONS. REFER TO DRAWINGS FOR HAVC RUT/AHU'S ORDER AND EXACT LOCATION OF SPACE TEMPERATURE SENSOR AND RH SENSOR.
8. THE REFRIGERATION CONTRACTOR SHALL COORDINATE WORK WITH OTHER CONTRACTORS AS REQUIRED.

GENERAL NOTES

1. ALL DASHED LINES ARE FIELD WIRING UNLESS OTHERWISE NOTED
2. DEW POINT SENSORS AND SPACE TEMPERATURE SENSORS ARE TO BE LOCATED AS SHOWN ON PLANS AND MOUNTED AT 7'–0" AFF. COORDINATE LOCATIONS WITH MECHANICAL DRAWINGS.
3. SUPPLY AIR TEMPERATURE SENSORS ARE TO BE LOCATED A MINIMUM OF 6' DOWNSTREAM OF DUCT HEATERS
4. ALL SHIELDED WIRED USED FOR SENSORS SHALL BE CUT OFF AND TAPED BACK ON THE SENSOR END OF THE WIRE. THE SHIELD SHALL BE GROUNDED TO THE GROUND LUG PROVIDED IN THE MAIN PANEL
5. ALL CONTROL WIRES SHALL BE A MINIMUM OF 14AWG (STANDED). SHIELDED CABLES SHALL BE A MINIMUM OF 22 AWG. ALL WIRING TO BE IN CONDUIT. POWER WIRING SHALL NO BE RUN IN THE SAME CONDUIT AS CONTROL WIRING.
6. VERIFY ALL TEMPERATURE SETTINGS WITH THE LUCKY'S REPRESENTATIVE.
7. 3/4"CONDUIT FOR PHOTOCELL AND TEMP SENSOR MUST BE ABOVE THE ROOF AND STUB OUT 18". INSTALL PER REFRIGERATION CONTROL DRAWINGS OUT OF DIRECT SUNLIGHT FACING NORTH
8. INSTALLATION SHALL MEET ALL LOCAL, STATE AND NATIONAL CODES AND IS THE RESPONSIBILITY OF THE INSTALLING CONTRACTOR
9. SMOKE DETECTOR POWER FEED ROM FIRE ALARM SYSTEM. WIRING BY FIRE ALARM CONTRACTOR. DO NOT TERMINATE AT FIRE ALARM CONTROL PANEL (IF APPLICABLE).
10. COMMUNICATIONS CABLE MUST BE DAISY CHAINED. NO T–TAPING IS ACCEPTABLE.

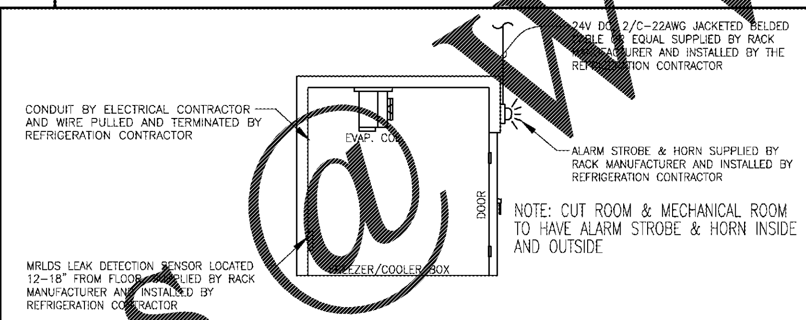

LEAK DETECTION FIELD INSTALLATION
NTS

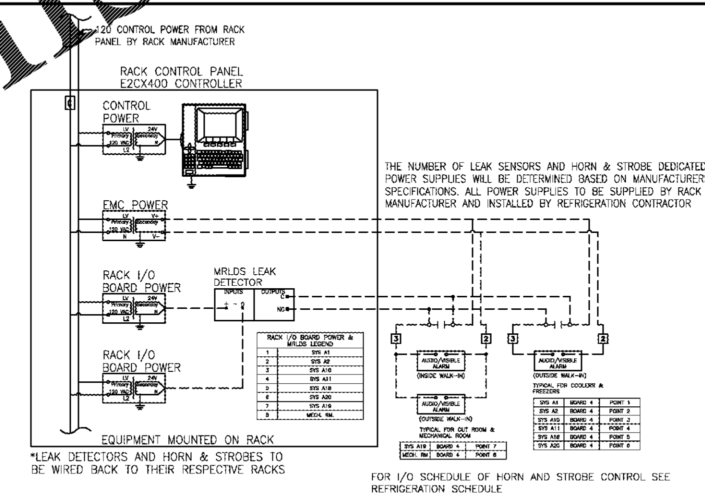

RACK I/O BOARD POWER & MRLDS LEGEND	
1	SYS A1
2	SYS A2
3	SYS A10
4	SYS A11
5	SYS A18
6	SYS A20
7	SYS A19
8	MECH. RM.

SYS A19	BOARD 4	POINT 7
MECH. RM	BOARD 4	POINT 8

SYS A1	BOARD 4	POINT 1
SYS A2	BOARD 4	POINT 2
SYS A10	BOARD 4	POINT 3
SYS A11	BOARD 4	POINT 4
SYS A18	BOARD 4	POINT 5
SYS A20	BOARD 4	POINT 6

LEAK DETECTION WIRING LAYOUT
NTS

LEGEND:
– – – – – – FIELD WIRING BY ELECT. CONTR.
——— FACTORY WIRING

MRLDS–250 – RACK MOUNTED

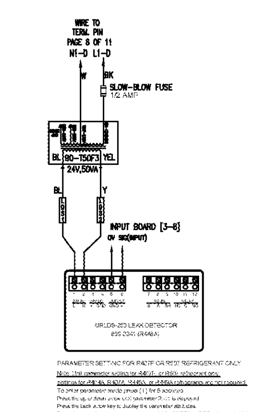

24V AC TRANSFORMER FOR FIELD INSTALLED MRLDS LEAK DETECTORS

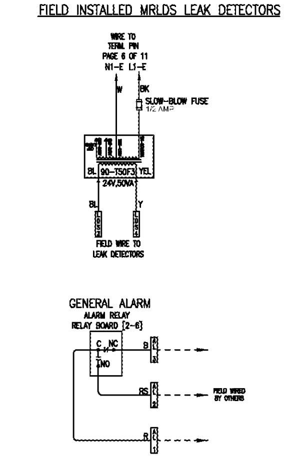

24V DC POWER SUPPLIES FOR FIELD INSTALLED HORN/STROBE

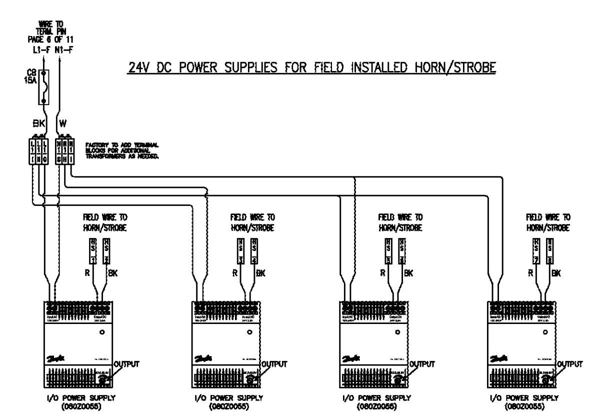

GENERAL NOTES

1. RACK MANUFACTURER TO PROVIDE ALL MRLDS LEAK DETECTION SENSORS (MODEL: 809–0041). REFRIGERATION CONTRACTOR TO SUPPLY AND INSTALL ALL WIRING & TERMINATED. CONDUIT BY ELECTRICAL CONTRACTOR.
2. RACK MANUFACTURER TO SUPPLY A SEPARATE LISTED/CSA CERTIFIED 24 VAC CLASS 2 TRANSFORMER FOR LEAK DETECTION MRLDS UNITS. EACH TRANSFORMER IS SUFFICIENT FOR UP TO (5) MRLDS UNITS.
3. REFRIGERATION ALARM PLACARDS TO BE PROVIDED BY RACK MANUFACTURER AND INSTALLED BY THE REFRIGERATION CONTRACTOR.

SEQUENCE OF OPERATION

LOCAL ALARM AT 1000 PPM (LESS THAN PEL)

A. REFRIGERANT MRLDS SENSOR TO SAMPLE AT EACH LOCATION.
B. WHEN THE REFRIGERANT CONCENTRATION REACHES 1000 PPM, A SIGNAL IS SENT TO THE CPC CONTROLLER. THE ALARM HORN AND STROBE LIGHT IS ACTIVATED THROUGH A RELAY ON THE OUTPUT BOARD.

WHEN REFRIGERANT IS RELEASED IN QUANTITIES REPORTABLE UNDER STATE, FEDERAL, OR LOCAL REGULATIONS, THE FIRE CODE OFFICIAL SHALL BE NOTIFIED.

HUSSMANN®
Lic. #644406
13770 RAMONA AVENUE
CHINO, CA 91710
PHONE (909) 590–4910
FAX (909) 590–5113

SALES PERSON
PROJECT MANAGER

REVISIONS
1 N. RENTERIA 05.07.18 REVISED VOLTAGE PER CUSTOMER

DATE: 05.05.18
SCALE: NTS
DRAWN BY: N. RENTERIA
CHK'D BY: ––––
APRV'D BY: ––––
PLAN: 82419ER1–9_EMS1–4.dwg

LUCKY'S MARKET
THE PROMENADE AT NAPLES CENTRE
NEW STORE
6424 NAPLES BLVE., SUITE 601 NAPLES, FL

EMS WIRING

SHEET
EM2

Order Plans @ WWW.LDILine.com