ELECTRICAL SYMBOLS LEGEND

10.28.16 (SYMBOLS APPLY ONLY WHEN USED ON DRAWINGS) ES06

SYMBOL	DESCRIPTION
	LIGHT FIXTURE (WALL MOUNTED/CEILING MOUNTED)
	LIGHT FIXTURE
	LIGHT FIXTURE EMERGENCY LIGHT
	LIGHT FIXTURE NIGHT LIGHT
	ENCLOSED COOLER/FREEZER LIGHT
	TRACK LIGHTING
	EXIT FIXTURE (WALL MOUNTED/CEILING MOUNTED)
	EMERGENCY FIXTURE
	SWITCH, SINGLE POLE
3	SWITCH, 3-WAY
4	SWITCH, 4-WAY
K	SWITCH, KEYED
D	SWITCH, DIMMER
VS	SWITCH, VARIBLE SPEED
M	SWITCH, MANUAL MOTOR
OS	SWITCH, OCCUPANCY SENSOR
OS	SWITCH, BI-LEVEL OCCUPANCY SENSOR
OS / R	CEILING OCCUPANCY SENSOR AND ASSOCIATED RELAY
	RECEPTACLE, DUPLEX
	RECEPTACLE, DUPLEX, MOUNTED HORIZONTALLY
	RECEPTACLE, DOUBLE DUPLEX
	RECEPTACLE, DUPLEX ISOLATED GROUND
	RECEPTACLE, DOUBLE DUPLEX, ISOLATED GROUND
	RECEPTACLE, SIMPLEX TWIST LOCK, L5-15R, UNO
	RECEPTACLE, SIMPLEX TWIST LOCK, ISOLATED GROUND, L5-15R, UNO
	RECEPTACLE, DUPLEX TWIST LOCK, L5-15R, UNO
	RECEPTACLE, DUPLEX TWIST LOCK, ISOLATED GROUND, L5-15R, UNO
	RECEPTACLE, SPECIAL
	RECEPTACLE, SIMPLEX
	RECEPTACLE, PLUG-MOLD
J	JUNCTION BOX (WALL MOUNTED/CEILING MOUNTED)
A	JUNCTION BOX, ALARM SYSTEM (WALL MOUNTED/CEILING MOUNTED)
R	ALARM JUNCTION BOX, FOR REMOTE TEST/RESET (WALL MOUNTED/CEILING MOUNTED)
	EQUIPMENT CONNECTION POINT (PROVIDED WITH EQUIPMENT)
	NON-FUSED DISCONNECT
	FUSED DISCONNECT
	CIRCUIT, CONCEALED IN WALLS OR CEILING, E INDICATES EXISTING WIRING
	CIRCUIT, CONCEALED IN FLOOR SLAB, E INDICATES EXISTING WIRING
	CIRCUIT, EXPOSED, E INDICATES EXISTING WIRING
	FLUSH MOUNTED PANELBOARD
	SURFACE MOUNTED PANELBOARD
▼ / ▼d / ▼v	VOICE/DATA, d DATA ONLY, v VOICE ONLY
	LOW VOLTAGE CABLE BOX FOR OTHER
	VOICE/DATA, FLUSH FLOOR
	MOTOR
	TELEPOWER POLE
	PUSH BUTTON
	BUZZER
S	SMOKE DETECTOR
	ENERGY MANAGEMENT TEMPERATURE SENSOR
T	THERMOSTAT
TC	TIME CLOCK

ABBREVIATIONS

a, b, c	LOWER CASE LETTERS INDICATE SWITCHING CONFIGURATION	HD	HAND DRYER
AFC	ABOVE FINISH COUNTER	IG	ISOLATED GROUND
AFF	ABOVE FINISH FLOOR	IRC	INTER-REGISTER COMMUNICATION
AFG	ABOVE FINISH GRADE	ISP	IN-STORE PROCESSOR
C	CONDUIT	LCU	LIGHTING CONTROL UNIT
CCT	CIRCUIT	KO	KEY OPERATED
CF	CEILING/CIRCULATION FAN	NTS	NEUTRAL
D	DATA	NTS	NOT TO SCALE
EC	ELECTRICAL CONTRACTOR	P	WITH PILOT LIGHT
EF	EXHAUST FAN	RH	RADIANT HEATER
EP	EXPLOSION PROOF	RC	REFRIGERATION CONTRACTOR
ETR	EXISTING TO REMAIN	SC	SECURITY CAMERA
EWC	ELECTRICAL WATER COOLER	SF	SUPPLY FAN
FUT	FUTURE	TP	TAMPER RESISTANT
GR	GROUND	TYP	TYPICAL
GFEP	GROUND FAULT EQUIPMENT PROTECTION	WH	WATER HEATER
GFI	GROUND FAULT CIRCUIT INTERRUPTER	WP	WEATHERPROOF
GF	CABLE FAN	WR	WEATHER RESISTANT
		UH	UNIT HEATER
		UNO	UNLESS NOTED OTHERWISE

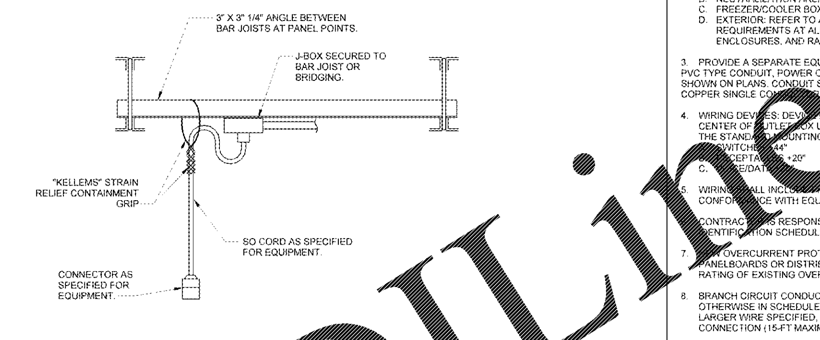

5 SUSPENDED POWER DROP DETAIL (OPEN TO STRUCTURE)
NTS

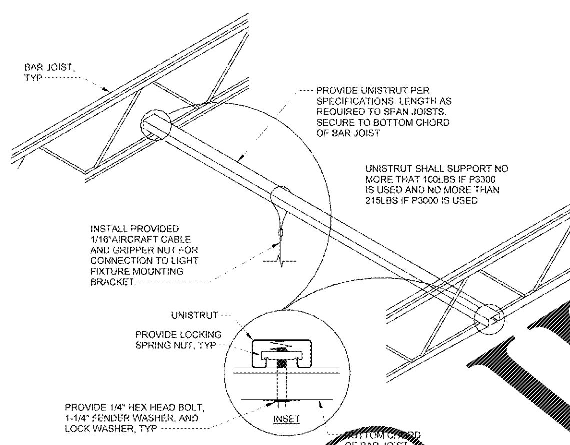

4 SUSPENDED LIGHTING CONNECTIONS TO STRUCTURE
NTS

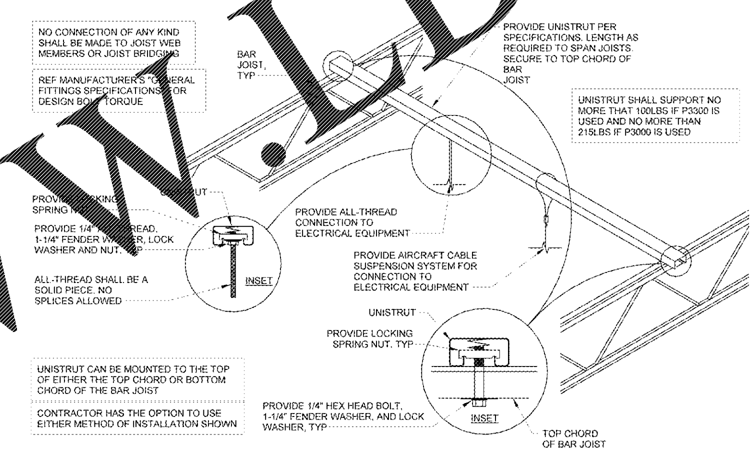

3 GENERAL ELECTRICAL CONNECTIONS TO STRUCTURE
NTS

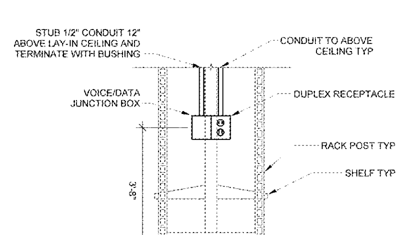

2 PHARMACY RACK POWER
NTS

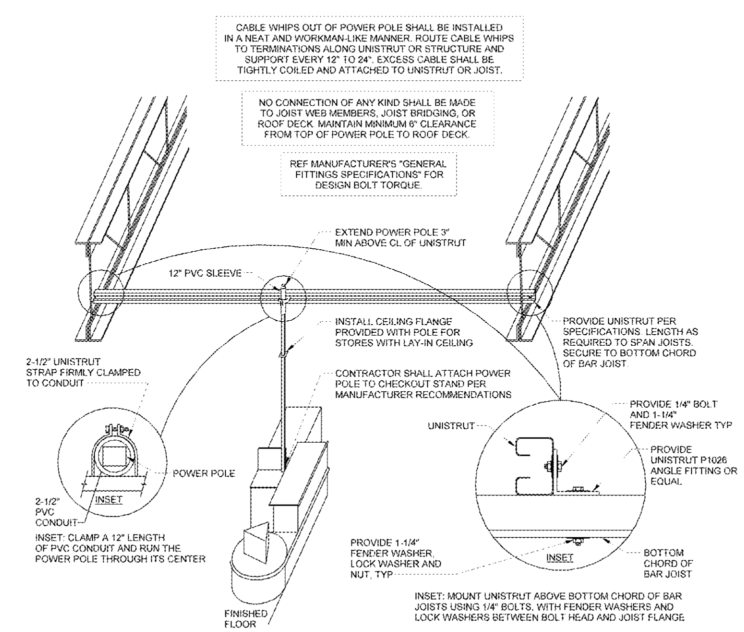

1 POWER POLE CONNECTION
NTS

GENERAL NOTES

10.28.16 EN06

1. FURNISH AND INSTALL ALL MATERIALS, EQUIPMENT, AND LABOR, FOR A COMPLETE INSTALLATION IN ALL RESPECTS, READY FOR INTENDED USE AND IN STRICT ACCORDANCE WITH NEC, NESC, STATE, AND LOCAL CODES, AND MANUFACTURER'S RECOMMENDATIONS. PAY ALL NECESSARY FEES AND PERMITS.
   A. NO CIRCUITRY SHALL BE ALLOWED TO BE ROUTED ACROSS THE ROOF OR THE EXTERIOR SIDE OF THE EXTERIOR WALLS.
   B. ALL EQUIPMENT SHALL BE UL LISTED WHERE APPLICABLE.
   C. ARRANGE ALL WORK TO MINIMIZE DISRUPTIONS TO STORE OPERATIONS. COORDINATE ALL DISRUPTIONS WITH WAL-MART CONSTRUCTION MANAGER AND STORE MANAGER.
   D. CONTRACTOR SHALL VERIFY ALL WALL FINISH THICKNESSES BEFORE INSTALLING BOXES. FURNISH AND INSTALL EXTENDED BOXES OR BOX EXTENDERS WHERE REQUIRED.
   E. CONTRACTOR SHALL VERIFY THAT ALL AFFECTED PANELBOARDS HAVE CIRCUIT BREAKER KNOCKOUTS PROPERLY COVERED AND THAT ALL TRIM IS IN GOOD CONDITION, ALLOWING NO ACCESS TO LIVE PARTS.
2. PROVIDE SEALS AT RACEWAY PENETRATIONS AS FOLLOWS:
   A. FIRE RATED WALLS: SEAL PER SPECIFICATIONS FOR FIRESTOPPING.
   B. NEUTRALIZATION AREA: SEAL PER MECHANICAL DETAIL.
   C. FREEZER/COOLER BOXES: SEAL WITH EXPANDING FOAM SEALANT.
   D. EXTERIOR: REFER TO ARCHITECTURAL DOCUMENTS FOR SEALING REQUIREMENTS AT ALL EXTERIOR MOUNTED DEVICES, FIXTURES, ENCLOSURES, AND RACEWAY PENETRATIONS.
3. PROVIDE A SEPARATE EQUIPMENT GROUNDING CONDUCTOR (SIZE PER NEC) IN PVC TYPE CONDUIT, POWER CIRCUITS, ISOLATED GROUND CIRCUITS, OR AS SHOWN ON PLANS. CONDUIT SHALL BE SIZED PER NEC BASED ON THWN 600 VOLT COPPER SINGLE CONDUCTORS, PLUS THE EQUIPMENT GROUNDING CONDUCTOR.
4. WIRING DEVICES: DEVICE MOUNTING HEIGHTS ARE FROM FINISHED FLOOR TO CENTER OF OUTLET BOX UNLESS NOTED OTHERWISE ON PLANS. COORDINATE THE STANDARD MOUNTING HEIGHTS WITH MASONRY:
   A. SWITCHES +44"
   B. RECEPTACLES +20"
   C. VOICE/DATA +20"
5. WIRING SHALL INCLUDE FINAL CONNECTION TO ALL EQUIPMENT IN CONFORMANCE WITH EQUIPMENT SUPPLIER WIRING DIAGRAMS.
6. CONTRACTOR IS RESPONSIBLE FOR PROVIDING COMPLETE PANELBOARD IDENTIFICATION SCHEDULES FOR PANELBOARDS AFFECTED BY REMODEL.
7. NEW OVERCURRENT PROTECTIVE DEVICES INSTALLED IN EXISTING PANELBOARDS OR DISTRIBUTION BOARDS SHALL MATCH THE TYPE AND AIC RATING OF EXISTING OVERCURRENT PROTECTIVE DEVICES.
8. BRANCH CIRCUIT CONDUCTORS SHALL BE MINIMUM #12 AWG UNLESS NOTED OTHERWISE IN SCHEDULES. WHERE 20A BRANCH CIRCUITS HAVE #8 AND LARGER WIRE SPECIFIED, #10 AWG WIRE SHALL BE USED FOR THE FINAL CONNECTION (15-FT MAXIMUM).
9. WHERE BRANCH CIRCUITS ARE GROUPED, SIZE CONDUIT AND DERATE CURRENT CARRYING CONDUCTORS PER NEC.
10. PROVIDE UL LISTED HANDLE TIES ON ALL MULTIWIRE BRANCH CIRCUITS PER NEC REQUIREMENTS.
11. SUPPORTS FROM STRUCTURE: NO ATTACHMENT OF ANY TYPE SHALL BE MADE TO BRIDGING OR JOIST WEB MEMBERS. UTILIZE ONLY THE TOP AND BOTTOM CHORDS FOR SUPPORTING THE ELECTRICAL SYSTEM INSTALLATIONS.
12. DEVICES SHOWN ON COOLER/FREEZER PANELS SHALL BE SURFACE MOUNTED UNLESS NOTED OTHERWISE. REFER TO ARCHITECTURAL DOCUMENTS FOR CONDUIT INSTALLATION AND SEALING REQUIREMENTS.
13. ONLY FEEDER CIRCUITS NOTED ON THE ONE LINE DIAGRAM AND BRANCH CIRCUITS NOTED BY LEGEND SHALL BE INSTALLED UNDER SLAB. ALL OTHER FEEDER AND BRANCH CIRCUITS SHALL BE INSTALLED OVERHEAD. PROVIDE EXTERIOR COATED GRC BENDS ON ALL CONDUIT RUNS THAT HAVE 45 DEGREE BENDS OR GREATER. REF SPECIFICATIONS.
14. SEISMIC ZONE REQUIREMENTS: PROVIDE EXPANSION COUPLINGS AND BRACING FOR ELECTRICAL EQUIPMENT AS REQUIRED BY LOCAL CODES.
15. EXISTING ELECTRICAL AND ALARM:
   A. WHERE DEMOLITION OR NEW CONSTRUCTION INTERRUPTS EXISTING ELECTRICAL CIRCUITS FEEDING EXISTING EQUIPMENT, DEVICES, OR LIGHTING TO REMAIN, BUT NOT SHOWN ON DRAWINGS, PROVIDE LABOR AND MATERIALS TO REWORK CIRCUITRY, AS REQUIRED, TO MAINTAIN EXISTING OPERATION.
   B. IF DEMOLITION OR NEW CONSTRUCTION WILL DISRUPT EXISTING UNDERGROUND SERVICES (ELECTRICAL, TELEPHONE, PARKING LOT LIGHTING CIRCUITRY, ETC.) PROVIDE ALL MATERIALS AND LABOR AS REQUIRED TO REROUTE, SLEEVE, OR OTHERWISE REWORK THESE SERVICES TO MAINTAIN THEIR EXISTING OPERATION.
   C. EXERCISE CAUTION AROUND ALARM AND SECURITY CABLES DURING DEMOLITION AND CONSTRUCTION. PROTECT ALARM AND SECURITY CABLES FROM ACCIDENTAL DAMAGE SO THAT SYSTEMS REMAIN OPERATIONAL AT ALL TIMES.
   D. DISPOSE OF ALL REMOVED MATERIALS, UNLESS OTHERWISE NOTED.
16. EXISTING ELECTRICAL DEMOLITION:
   A. GENERAL: REMOVE OR RELOCATE EXISTING ELECTRICAL EQUIPMENT CONDUIT, AND CONDUCTORS AS INDICATED ON THE DRAWINGS, OR ONLY AS REQUIRED BY DEMOLITION. REMOVE ALL PANELBOARDS, DISCONNECT SWITCHES, BOXES, RELAYS, TIME SWITCHES, LIGHTS, DEVICES, ETC., WHICH WILL NOT BE REUSED.
   B. SALES FLOOR: REMOVE UNUSED POWER DROP CONDUIT, CONDUCTORS AND RELATED DEVICES SERVING SALES AREA GONDOLAS BEING RELOCATED OR REMOVED. EXISTING CONDUIT AND CONDUCTORS MAY BE REUSED FOR NEW POWER DROPS WHERE SIZE, RATING, AND CONDITION MEET REQUIREMENTS INDICATED ON PLANS AND ALL U.L. RATINGS. REMOVE ALL UNUSED CONDUIT AND CONDUCTORS BACK TO POINT OF ORIGIN WHENEVER FEASIBLE AND RELABEL DEMOLISHED CIRCUITS AS "SPARE". PROVIDE HANDLE DEVICE TO LOCK "SPARE" CIRCUIT BREAKER IN THE "OFF" POSITION.
   C. CONDUIT AND WIRING TO BE ABANDONED IN CEILING SPACES AND OTHER NON-PUBLIC AREAS (I.E., THROUGH STOCKROOM AREA): CUT WIRING LOOSE AND REMOVE FROM RACEWAY(S), LEAVING RACEWAY(S) IN PLACE. CONDUIT TO BE ABANDONED IN WALLS OR FLOORS SHALL BE REMOVED BACK TO FINISHED SURFACE AND CAPPED INSIDE. REPAIR SURFACE(S) TO MATCH ADJACENT.
   D. ALL CIRCUIT BREAKERS SERVING BRANCH CIRCUITS TO BE ABANDONED OR REMOVED SHALL REMAIN IN RESPECTIVE PANELBOARD FOR FUTURE USE, UNLESS NOTED OTHERWISE ON DRAWINGS. PROVIDE HANDLE DEVICE TO LOCK "SPARE" CIRCUIT BREAKER IN THE "OFF" POSITION.
   E. DEMOLISHED FLUORESCENT LIGHT FIXTURES: REFER TO SELECTIVE SITE DEMOLITION SPECIFICATION FOR DISPOSAL OF LIGHT FIXTURE.
   F. BUILDING COMPONENTS ABANDONED BY THE SCOPE OF WORK SHALL BE SECURED TO PREVENT FALLING, LOOSENING, OR CREATING DAMAGE OF ANY KIND IN THE FUTURE.
17. ETHERNET CABLE:
   A. FURNISH AND INSTALL JUNCTION BOXES AS SHOWN ON PLANS. PROVIDE CONDUIT AS REQUIRED BY LOCAL CODES AND/OR ORDINANCES.
   B. ETHERNET CABLE IS FURNISHED BY OTHERS.
   C. ELECTRICAL CONTRACTOR SHALL INSTALL CABLE IN POWER POLES.
   D. ELECTRICAL CONTRACTOR SHALL INSTALL OTHER CABLE
   E. AS DIRECTED BY WALMART CONSTRUCTION MANAGER.

EXISTING CONDITIONS WERE TAKEN FROM ORIGINAL DRAWINGS AND MAY NOT REFLECT EXACT "AS-BUILT" CONDITIONS. CONTRACTOR SHALL FIELD VERIFY ALL EXISTING CONDITIONS PRIOR TO SUBMITTING FINAL BIDS. CONTRACTOR SHALL CAREFULLY COORDINATE NEW WORK AND DEMOLITION WITH ALL OTHER DISCIPLINES AND EXISTING CONDITIONS.

EACH SUBCONTRACTOR IS RESPONSIBLE FOR HAVING A THOROUGH KNOWLEDGE OF ALL DRAWINGS AND SPECIFICATIONS IN THEIR RELATED FIELD. THE FAILURE TO ACQUAINT THEMSELVES WITH THIS KNOWLEDGE DOES NOT RELIEVE THE RESPONSIBILITY OF PERFORMING THE WORK PROPERLY. NO ADDITIONAL COMPENSATION SHALL BE ALLOWED BECAUSE OF CONDITIONS THAT OCCUR DUE TO FAILURE TO FAMILIARIZE WORKERS WITH THIS KNOWLEDGE.

RETAIL DESIGN COLLABORATIVE
11091 Freedom Drive 110
VA 20190
t 703 0086
rdcollaborative.com

STIPULATION FOR REUSE
THIS DRAWING WAS PREPARED FOR USE ON A SPECIFIC SITE AT: GORDONSVILLE, VA CONTEMPORANEOUSLY WITH ITS ISSUE DATE ON 041018 AND IT IS NOT SUITABLE FOR USE ON A DIFFERENT PROJECT SITE OR AT A LATER TIME. USE OF THIS DRAWING FOR REFERENCE OR EXAMPLE ON ANOTHER PROJECT REQUIRES THE SERVICES OF PROPERLY LICENSED ARCHITECTS AND ENGINEERS. REPRODUCTION OF THIS DRAWING FOR REUSE ON ANOTHER PROJECT IS NOT AUTHORIZED AND MAY BE CONTRARY TO THE LAW.

CONSULTANTS
Jason C. Adams P.E.
SUITE 5268 479-636-5004 800-321-8721
1805 N 2ND ST JOB NO.: 19532
ROGERS, AR 72756 DESIGNED BY: JRL

Walmart
GORDONSVILLE, VA
164 CAMP CREEK PKWY, LOUISA, VA 23093
STORE NO: 4682-223
JOB NUMBER: 17-127.25 PROTO: 143 SGR-OR
Remodel Proto

ISSUE BLOCK

CHECKED BY:	BMD
DRAWN BY:	JRL
PROTO CYCLE:	02/23/18
DOCUMENT DATE:	041018
BG PROJECT NO:	19532

This document originally issued and sealed by Jason Christopher Adams, P.E. 9052432 on 04/09/2018. This document should not be considered a certified document. NOT FOR CONSTRUCTION

ELECTRICAL DETAILS

SHEET: E3

4/9/2018 4:39:42 PM C:\Users\jrl\Documents\4682 Gordonsville MEP V18_JRL.rvt
Order Plans @ WWW.LDILine.com