AIR DEVICE SCHEDULE

MARK	SERVICE	MANUFACTURER MODEL			STYLE	FRAME TYPE	FACE SIZE	NOTES
CD	SUPPLY AIR	TITUS TMS	E.H. PRICE SCD	CARNES SFTB	ROUND NECK CEILING DIFFUSER	LAY-IN	24 X 24	B, D, E
CD1 CD2	SUPPLY AIR	TITUS TDC	E.H. PRICE SMD	CARNES SKFA	ROUND NECK CEILING DIFFUSER	SURFACE MOUNT	12 X 12 24 X 24	B, D, E, U
CD3	SUPPLY AIR (ALUMINUM)	TITUS TMS-AA	E.H. PRICE ASCD	CARNES SFAB	ROUND NECK CEILING DIFFUSER	LAY-IN	24 X 24	C, D, E
CD4	SUPPLY AIR (ALUMINUM)	TITUS TDC-AA	E.H. PRICE AMD	CARNES SEFA	ROUND NECK CEILING DIFFUSER	SURFACE MOUNT	24 X 24	C, D, E, U
CD5	SUPPLY AIR (ALUMINUM)	TITUS TMRA-AA	E.H. PRICE ARCD	CARNES SSAA (KXRA)	ROUND NECK CEILING DIFFUSER	SURFACE MOUNT	REF DRAWINGS	C, D, E, I
CD6	SUPPLY AIR	TITUS TDCA-AA	E.H. PRICE AMD	CARNES SKEA	ROUND NECK CEILING DIFFUSER	LAY-IN	24 X 24	C, D, E, Q
CD7	SUPPLY AIR	TITUS TDCA	EH.PRICE SMDA	CARNES SKTJ	ROUND NECK CEILING DIFFUSER	LAY-IN	24 X 24	B, D, E, Q
CD8	SUPPLY AIR	HART & COOLEY FPD3			ROUND NECK CEILING DIFFUSER	LAY-IN	24 X 24	B, D, R, S
SAW	SUPPLY AIR	TITUS 300RS	E.H. PRICE 520DS	CARNES RTDBV	DUCT MOUNTED WALL REGISTER	SURFACE MOUNT	REF DRAWINGS	B, E, F, I
SAW1	SUPPLY AIR SLOT DIFFUSER	TITUS FL-20-JT	E.H. PRICE JS-220	CARNES CDFMC	PLENUM SLOT DIFFUSER	SURFACE MOUNT	REF DRAWINGS	C, D, E, K
SAW2	SUPPLY AIR LINEAR BAR	TITUS CT-540	E.H. PRICE LBPH25B	CARNES CCNB	LINEAR BAR DIFFUSER		REF DRAWINGS	C, D, E
SLV	SUPPLY AIR LINEAR VANE	TITUS LL-1	E.H. PRICE LV1		LINEAR VANE DIFFUSER	SURFACE MOUNT	REF DRAWINGS	C, D, E
DB1	SUPPLY AIR	AES ADB-6-25			DROP BOX DIFFUSER			A, G, H
DB2	SUPPLY AIR	AES ADB-6-10			DROP BOX DIFFUSER			A, G, H
DB3	SUPPLY AIR	AES ADB-6-20			DROP BOX DIFFUSER			A, G, H
DB4	SUPPLY AIR	AES ADB-1-20			DROP BOX DIFFUSER			A, G, H
DB5	SUPPLY AIR	AES ADB-1-10			DROP BOX DIFFUSER			A, G, H
DB6	SUPPLY AIR	AES ADB-1-5			DROP BOX DIFFUSER			A, G, H
DB7	SUPPLY AIR	AES ADB-1-8			DROP BOX DIFFUSER			A, G, H
DB8	SUPPLY AIR	AES ADB-1-12			DROP BOX DIFFUSER			A, G, H
FPT	FAN POWERED TERMINAL	TITUS ATQP02-08	E.H. PRICE FEV-20-08	CARNES ASEG-08-B	VARIABLE VOLUME PARALLEL FLOW			L, M, N, P
TGW RGW	TRANSFER AIR RETURN AIR	TITUS 33RL	E.H. PRICE 91L	CARNES RSHAH	FIXED BLADE WALL GRILLE	SURFACE MOUNT	REF DRAWINGS	B, E B, E
TGW1 RGW1	TRANSFER AIR RETURN AIR	TITUS 63FL	E.H. PRICE 99L	CARNES RAJMH	FIXED BLADE WALL GRILLE	SURFACE MOUNT	REF DRAWINGS	C, E C, E
TG RAG EAG	TRANSFER AIR RETURN AIR EXHAUST AIR	TITUS 50F (TYPE 3)	E.H. PRICE 80	CARNES RAPAH	1/2" EGGCRATE CEILING GRILLE	LAY-IN	24 X 24	C, E C, E, F C, E, F
TG1 RAG1 EAG1	TRANSFER AIR RETURN AIR EXHAUST AIR	TITUS 50F (TYPE 1)	E.H. PRICE 80	CARNES RAPAF	1/2" EGGCRATE CEILING GRILLE	SURFACE MOUNT	12 X 12	C, E C, E, F C, E, F, I
TG2 RAG2 EAG2	TRANSFER AIR RETURN AIR EXHAUST AIR	TITUS 50F (TYPE 1)	E.H. PRICE 80	CARNES RAPAF	1/2" EGGCRATE CEILING GRILLE	SURFACE MOUNT	24 X 24	C, D, E C, D, E, F C, D, E, F, I
TG3 RAG3 EAG3	RETURN AIR (REMOVABLE GRILLE)	TITUS 50FF (TYPE 3)	E.H. PRICE 80FF	CARNES RAPAF	1/2" EGGCRATE CEILING GRILLE	LAY-IN	24 X 24	C, E, F, J C, E, F, J C, E, F, J
RAG4	RETURN AIR	HART & COOLEY RE5T			1/2" EGGCRATE CEILING GRILLE	LAY-IN	24 X 24	C, F, R, S
SRD	SUPPLY AIR	TITUS XC-310	E.H. PRICE RID	CARNES SSDB	ROUND NECK ROUND DIFFUSER	NONE	VARIES	B, D, T

GENERAL INFORMATION (ALL DEVICES):
1. THIS SCHEDULE IS COMPREHENSIVE. ALL MARKS MAY OR MAY NOT BE USED ON THE PLANS.

NOTES:
A. 6-WAY (DB1-DB3) OR 4-WAY (DB4-DB8) THROW UNLESS SHOWN OTHERWISE WITH FLOW ARROWS ON PLAN.
B. ALL STEEL CONSTRUCTION.
C. ALL ALUMINUM CONSTRUCTION.
D. BRANCH DUCT SIZE SHALL BE SAME AS NOTED DIFFUSER NECK SIZE UNLESS NOTED OTHERWISE.
E. STANDARD WHITE FINISH.
F. PROVIDE NECK FOR DUCT CONNECTION.
G. DROP BOX DIFFUSERS FURNISHED BY OWNER INSTALLED BY CONTRACTOR. REFERENCE SPECIFICATIONS.
H. PROVIDE INTEGRAL OPPOSED BLADE DAMPERS ON ALL DRUM LOUVERS ON DROP BOXES WITH BRANCH DUCTWORK ATTACHED TO THE SUPPLY PLENUM.
I. PROVIDE MANUFACTURER'S OPPOSED BLADE DAMPER IN NECK.
J. PROVIDE WITH FASTENERS FOR COMPLETE (NON-HINGED) REMOVABILITY OF GRILLE. DO NOT PROVIDE FILTER UNLESS NOTED OTHERWISE.
K. TWO 2" SLOTS WITH MANUFACTURER'S INSULATED PLENUM (TITUS FBP1. PRICE JSPI. CARNES CXPC).
L. SET PRIMARY AIR MINIMUM TO 40 CFM AND MAXIMUM TO 300 CFM.
M. ELECTRICAL INFORMATION: 3 KW ELECTRIC HEAT, 277V SINGLE PHASE, AND FACTORY MOUNTED DISCONNECT.
N. UNIT HEAT SHALL BE CONTROLLED BY MANUFACTURER'S REMOTE MOUNTED 24V THERMOSTAT. REFERENCE PLANS FOR THERMOSTAT LOCATION.
P. PROVIDE FACTORY-INSTALLED. PRESSURE INDEPENDENT, ELECTRONIC CONTROL PACKAGE WITH FACTORY INSTALLED CONTROL POWER TRANSFORMER.
Q. REFER TO PLANS FOR DIRECTIONAL ARROWS INDICATING CFM THROWS FOR PROPER GRILLE SELECTION.
R. FIXTURES SUPPLIED BY HJC (HAINES, JONES & CADBURY); CONTACT CUSTOMER SERVICE (800) 459-7099.
S. STANDARD BLACK FINISH.
T. GRAY FINISH.
U. PROVIDE CEILING TRANSITION REGISTER BOX WITH 16" OR 24" PLATE FOR ROUGH-IN.

01.27.12

VOLUME/BALANCE DAMPER SCHEDULE

TYPE	MANUFACTURER/MODEL		
ROUND	AES WMVCD	RUSKIN WMRS25	SISNEROS BROTHERS SBWM-VCD
RECTANGULAR	AES AMD4	RUSKIN WMD25	SISNEROS BROTHERS SBR-VCD

NOTE:
NO SUBSTITUTIONS ALLOWED. REFER TO SPECIFICATION FOR ACCESSORIES

CONTACTS:
AES - (800) 786-0402
RUSKIN - (816) 761-7476
SISNEROS BROTHERS - (800) 499-0106

05.25.07

FAN SCHEDULE

MARK	AREA SERVED	MANUFACTURER MODEL				CFM	ESP	MOUNTING FAN TYPE	V/PH/HZ HP (W)	DRIVE	CONTROL METHOD	NOTES
EF-1	FRONT RESTROOMS	CARNES VEDK15M3	ACME PRN135G	PENNBARRY DX16R	GREENHECK G-133-A	1450	0.5"	ROOFTOP CENTRIFUGAL	120/1/60 1/2	DIRECT	CONTINUOUS	A, B, D, E
EF-4	PHARMACY TOILET	CARNES VEDK06J2 W/ FCP	ACME PRN080-1	PENNBARRY DX08R	GREENHECK G-065-D	125	0.3"	ROOFTOP CENTRIFUGAL	120/1/60 1/10	DIRECT	WALL SWITCH	A, B, D, E
EF-6	REAR RESTROOMS	CARNES VEDK15M3	ACME PRN135G	PENNBARRY DX16R	GREENHECK G-133-A	1375	0.5"	ROOFTOP CENTRIFUGAL	120/1/60 1/2	DIRECT	CONTINUOUS	A, B, D, E
EF-7	ACC TOILET / MECH	CARNES VEDK08J2	ACME PRN100	PENNBARRY DX11R	GREENHECK G-090-D	525	0.375"	ROOFTOP CENTRIFUGAL	120/1/60 1/5	DIRECT	CONTINUOUS	A, B, D, E

GENERAL INFORMATION:
1. FANS MUST BE AMCA CERTIFIED AS WELL AS UL OR ETL LISTED.
2. SCHEDULED FAN HORSEPOWERS ARE MAXIMUM AND MAY VARY BETWEEN MANUFACTURERS.

NOTES:
A. FURNISH WITH FACTORY MOUNTED DISCONNECT.
B. FURNISH WITH GRAVITY BACKDRAFT DAMPER AND BIRDSCREEN.
C. ROOF CURB PROVIDED BY GENERAL CONTRACTOR. REFER TO SPECIFICATIONS.
D. FURNISH WITH FACTORY PRE-WIRED FAN SPEED CONTROLLER.
E. FASTEN THE BASE OF EXHAUST FAN TO ROOF CURB WITH (8) #10 SET SCREWS AND NEOPRENE / SS BONDED WASHERS (2 PER SIDE).
F. PROVIDE SAIL SWITCH (HONEYWELL #S688A).
G. REF ELECTRICAL DRAWINGS FOR INFORMATION REGARDING FAN INTERLOCK.
H. REF ELECTRICAL DRAWINGS FOR INFORMATION REGARDING FAN CONTROL.
J. PROVIDE WITH MANUFACTURER'S CEILING GRILLE.
K. PROVIDE 12" CURB EXTENSION.
L. FURNISH WITH MANUFACTURER'S HINGE KIT AND INSTALL KIT IN ACCORDANCE WITH MANUFACTURER'S INSTRUCTIONS FOR NFPA 96 CLEANING ACCESS.

07.29.16

AIR CURTAIN SCHEDULE

MARK	AREA SERVED	MANUFACTURER/MODEL	WEIGHT (LBS)	FAN MOTORS				ELECTRICAL DATA			NOTES
				QTY	HP	VOLTS	PH	FLA	MCA	MOCP	
AC1	PICKUP STORAGE	BERNER AHD10-1048A	70	1	0.5	120	1	8	11	15	A,C,F,H

NOTES:
A. UNIT SHALL BE FURNISHED WITH FACTORY MOUNTED NON-FUSED TOGGLE DISCONNECT SWITCH LOCATED ON TOP OF AIR CURTAIN.
B. UNIT SHALL BE FURNISHED WITH MANUFACTURER'S 120V PHOTOELECTRIC SENSOR SWITCH. SENSOR REFLECTOR. AND REQUIRED ACCESSORIES TO ENERGIZE ALL AIR CURTAINS AT EACH DOOR ON HIGH SPEED WHEN DOOR OPENS AND DE-ENERGIZE AIR CURTAINS WHEN DOOR CLOSES.
C. UNIT SHALL BE WALL MOUNTED. FOR CURTAIN INSTALLATIONS NOT DETAILED ON ARCHITECTURAL DRAWINGS.
D. MULTIPLE AIR CURTAINS AT EACH DOOR SHALL BE FURNISHED WITH SEPARATE POWER SUPPLIES FOR EACH CURTAIN.
E. AS REQUIRED. ALL OPENINGS WITH TWO AIR CURTAINS TO BE FURNISHED WITH A FIELD MOUNTED AND WIRED RELAY TO ALLOW FOR ONE SWITCH TO ACTIVATE TWO AIR CURTAINS.
F. BERNER SHALL BE FURNISHED WITH FACTORY INSTALLED SINGLE PHASE CONTROL PANEL. LEFT END.
G. BERNER UNIT SHALL BE FURNISHED WITH TANDEM PERFORMANCE KITS.
H. UNIT SHALL BE FURNISHED WITH MANUFACTURER'S 24V AUTOMATIC MAGNETIC LIMIT SWITCH AND TIME DELAY TO ENERGIZE AIR CURTAIN WHEN DOOR OPENS AND CONTINUE OPERATION FOR 30 SECONDS AFTER DOOR CLOSES.

MECHANICAL SYMBOLS

18/12	RECTANGULAR DUCT 18" WIDE BY 12" DEEP
12"	12" DIAMETER ROUND DUCT
	SUPPLY DUCT IN SECTION
	RETURN OR EXHAUST DUCT IN SECTION
	ELBOW WITH TURNING VANES
	TEE WITH TURNING VANES
	ROUND (OR OVAL) ELBOW
	VOLUME/BALANCE DAMPER
	SUPPLY AIR DIFFUSER WITH ROUND SUPPLY DUCT
	RETURN OR EXHAUST AIR DIFFUSER WITH ROUND DUCT
CD / 12" / 250	DIFFUSER OR GRILLE TYPE BRANCH DUCT AND/OR NECK SIZE CFM
T UH1	THERMOSTAT
S	TIMER
S#	TEMP SENSOR
	CONNECT TO EXISTING
ETR	EXISTING TO REMAIN
FD	FIRE DAMPER

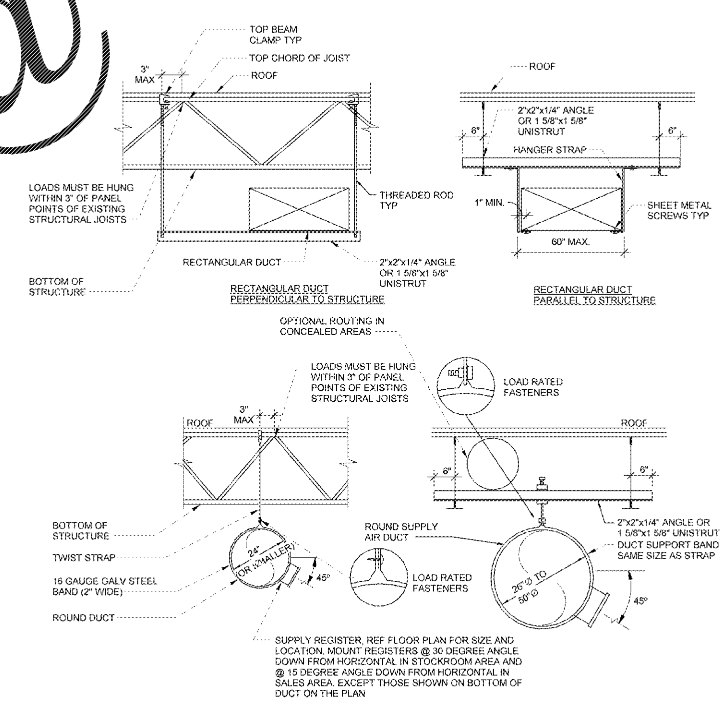

2 DUCT SUPPORT AND GRILLE
NTS

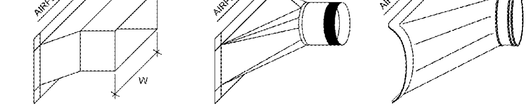

NOTES:
1. SPIN-IN FITTINGS W/ SCOOPS ARE NOT ACCEPTABLE.
2. REF PLANS FOR RUNOUT SIZES.
3. 45° LEAD IN.

1 BRANCH DUCT FITTING
NTS

RETAIL DESIGN COLLABORATIVE

rdcollaborative.com

STIPULATION FOR REUSE: THIS DRAWING WAS PREPARED FOR USE ON A SPECIFIC SITE AT: GORDONSVILLE, VA CONTEMPORANEOUSLY WITH ITS ISSUE DATE ON 041018 AND IT IS NOT SUITABLE FOR USE ON A DIFFERENT PROJECT SITE OR AT A LATER TIME. USE OF THIS DRAWING FOR REFERENCE OR EXAMPLE ON ANOTHER PROJECT REQUIRES THE SERVICES OF PROPERLY LICENSED ARCHITECTS AND ENGINEERS. REPRODUCTION OF THIS DRAWING FOR REUSE ON ANOTHER PROJECT IS NOT AUTHORIZED AND MAY BE CONTRARY TO THE LAW.

CONSULTANTS
Roy R. Payne, Jr. P.E.
SUITE 5550 1805 N 2ND ST ROGERS, AR 72756
479-636-5004 800-321-8721
JOB NO.: 19532
DESIGNED BY: COL

Walmart
GORDONSVILLE, VA
164 CAMP CREEK PKWY, LOUISA, VA 23093
STORE NO: 4682-223
JOB NUMBER: 17-127.25
PROTO: 143 SGR-OR
Remodel Proto

ISSUE BLOCK

CHECKED BY:	RRP
DRAWN BY:	COL
PROTO CYCLE:	02/23/18
DOCUMENT DATE:	041018
BG PROJECT NO:	19532

This document originally issued and sealed by Roy R. Payne, Jr., P.E. #039964 on 04/09/2018. This document should not be considered a certified document.

NOT FOR CONSTRUCTION

MECHANICAL DETAILS AND SCHEDULES

SHEET: M2

Order Plans @ WWW.LDILine.com