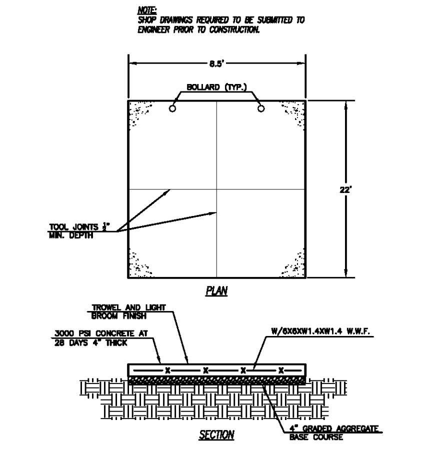

NOTE:
DUMPSTERS SHALL BE SCREENED BY A 100% OPAQUE FENCE OR WALL WITH AN OPAQUE METAL GATE ENCLOSURE.

DUMPSTER PAD (8.5'X22') — DEVELOPMENT planning & engineering, inc. civil · sanitary · transportation — REV. | BY | DATE | DESCRIPTION | APP. | APP. | APP. | CKD. | DESIGN | BY | DATE — FILE NO. | JOB NO. — STD. DETAIL NO. DUMPSTERPAD10.DWG

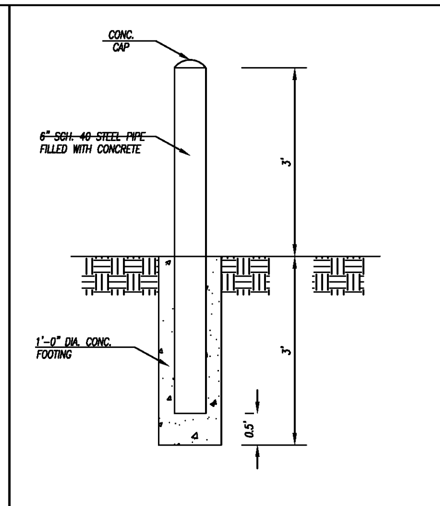

TYPICAL BOLLARD DETAIL — DEVELOPMENT planning & engineering, inc. civil · sanitary · transportation — REV. | BY | DATE | DESCRIPTION | APP. | APP. | APP. | CKD. | DESIGN | BY | DATE — FILE NO. | JOB NO. — STD. DETAIL NO.

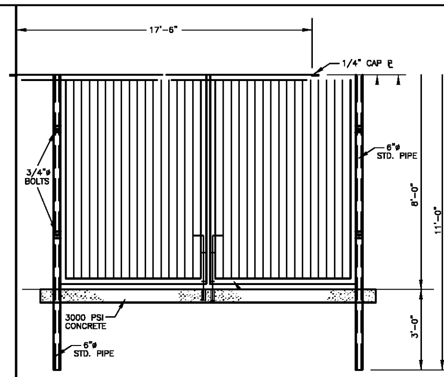

CONTAINER ENCLOSURE GATE — DEVELOPMENT planning & engineering, inc. civil · sanitary · transportation — REV. | BY | DATE | DESCRIPTION | APP. | APP. | APP. | CKD. | DESIGN | BY | DATE — FILE NO. | JOB NO. — STD. DETAIL NO.

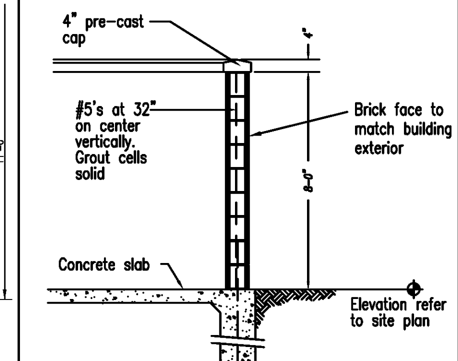

NOTE:
FOOTING TO MATCH BUILDING SEE STRUCTURAL DWGS.

DUMPSTER SECTION MASONRY — DEVELOPMENT planning & engineering, inc. civil · sanitary · transportation — REV. | BY | DATE | DESCRIPTION | APP. | APP. | APP. | CKD. | DESIGN | BY | DATE — FILE NO. | JOB NO. — STD. DETAIL NO.

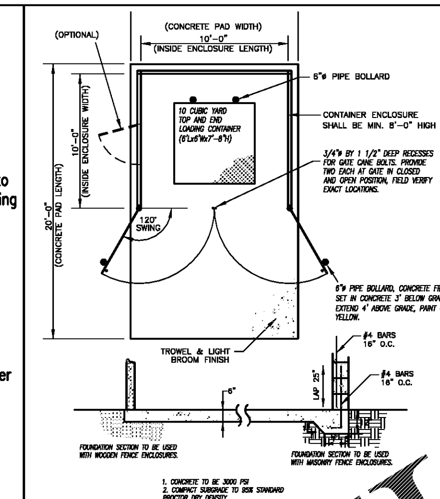

CONTAINER ENCLOSURE PLAN — DEVELOPMENT planning & engineering, inc. civil · sanitary · transportation — REV. | BY | DATE | DESCRIPTION | APP. | APP. | APP. | CKD. | DESIGN | BY | DATE — FILE NO. | JOB NO. — STD. DETAIL NO.

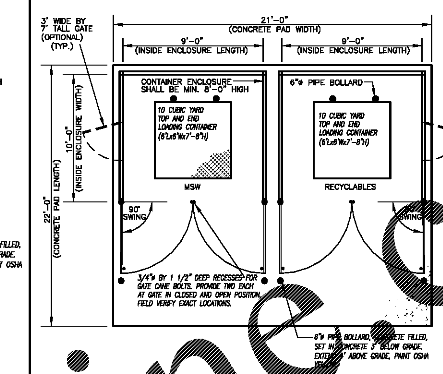

DOUBLE CONTAINER ENCL. PLAN — DEVELOPMENT planning & engineering, inc. civil · sanitary · transportation — REV. | BY | DATE | DESCRIPTION | APP. | APP. | APP. | CKD. | DESIGN | BY | DATE — FILE NO. | JOB NO. — STD. DETAIL NO.

NOTES:
1. ALL SIGNS SHOWN SHALL BE REFLECTORIZED TO SHOW THE SAME COLOR BY NIGHT AS BY DAY.
2. ALL SIGNS SHALL BE SECURELY MOUNTED ON GALVANIZED STEEL CHANNEL POSTS.
3. INSTALL QUANTITY AND AT LOCATIONS REQUIRED BY CODE AND/OR AS INDICATED ON DRAWINGS. CONFIRM ALL HANDICAPPED SIGNAGE CODES.

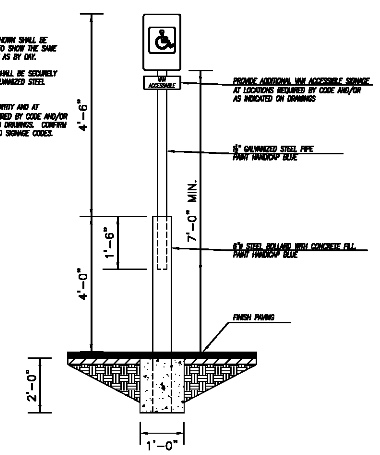

SHEET 1 OF 2

HANDICAP PARKING SIGN — DEVELOPMENT planning & engineering, inc. civil · sanitary · transportation — REV. | BY | DATE | DESCRIPTION | APP. | APP. | APP. | CKD. | DESIGN | BY | DATE — FILE NO. | JOB NO. — STD. DETAIL NO. HCSIGN.DWG

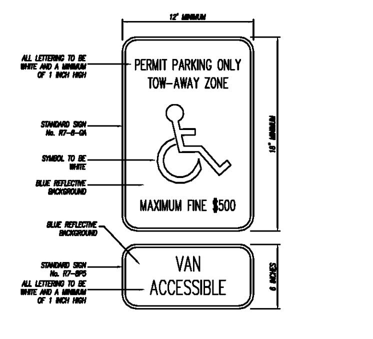

1. ALL SIGNS TO BE 0.080" THICK ALUMINUM.
2. ALL SIGN SHALL CONFORM WITH CURRENT A.D.A. FEDERAL, STATE, AND LOCAL CODES & REGULATIONS.
3. PLACE "VAN ACCESSIBLE" SIGN IN FRONT OF VAN ACCESSIBLE SPACES ONLY.

SHEET 2 OF 2

HANDICAP PARKING SIGN — DEVELOPMENT planning & engineering, inc. civil · sanitary · transportation — REV. | BY | DATE | DESCRIPTION | APP. | APP. | APP. | CKD. | DESIGN | BY | DATE — FILE NO. | JOB NO. — STD. DETAIL NO. HCSIGN.DWG

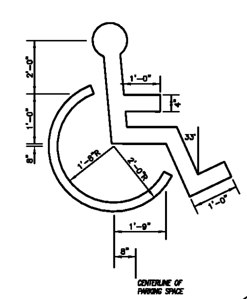

HANDICAP SYMBOL — DEVELOPMENT planning & engineering, inc. civil · sanitary · transportation — REV. | BY | DATE | DESCRIPTION | APP. | APP. | APP. | CKD. | DESIGN | BY | DATE — FILE NO. | JOB NO. — STD. DETAIL NO. HCSYMBOL.DWG

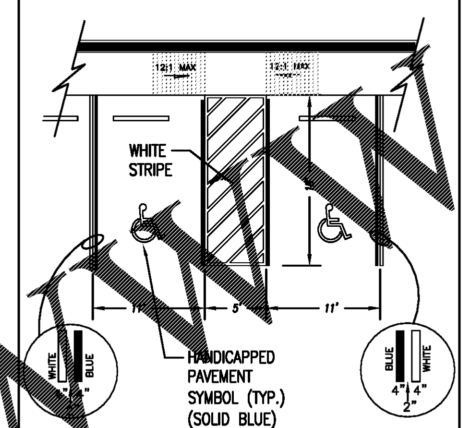

HANDICAP PARKING DETAIL — DEVELOPMENT planning & engineering, inc. civil · sanitary · transportation — REV. | BY | DATE | DESCRIPTION | APP. | APP. | APP. | CKD. | DESIGN | BY | DATE — FILE NO. | JOB NO. — STD. DETAIL NO.

Note: All traffic flow arrows to be solid white reflective traffic paint as per dimensions below.

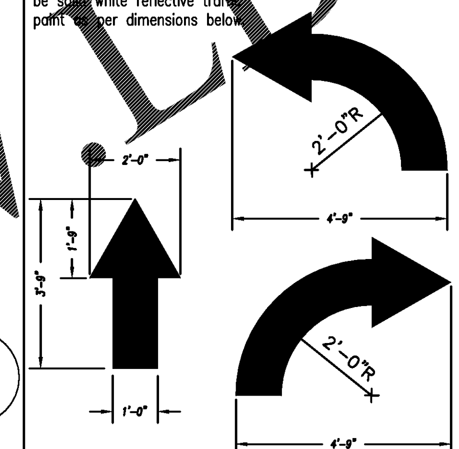

PAVEMENT MARKINGS — DEVELOPMENT planning & engineering, inc. civil · sanitary · transportation — REV. | BY | DATE | DESCRIPTION | APP. | APP. | APP. | CKD. | DESIGN | BY | DATE — FILE NO. | JOB NO. — STD. DETAIL NO.

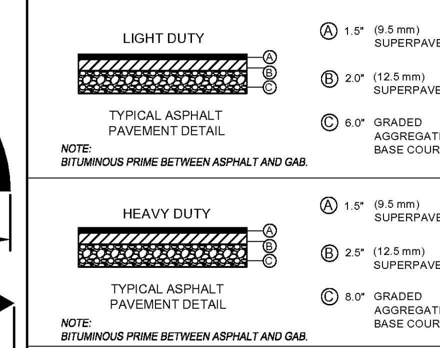

PAVEMENT DETAIL — DEVELOPMENT planning & engineering, inc. civil · sanitary · transportation — REV. | BY | DATE | DESCRIPTION | APP. | APP. | APP. | CKD. | DESIGN | BY | DATE — FILE NO. | JOB NO. — STD. DETAIL NO.

TRENCH CONSTRUCTION FOR STORM DRAIN

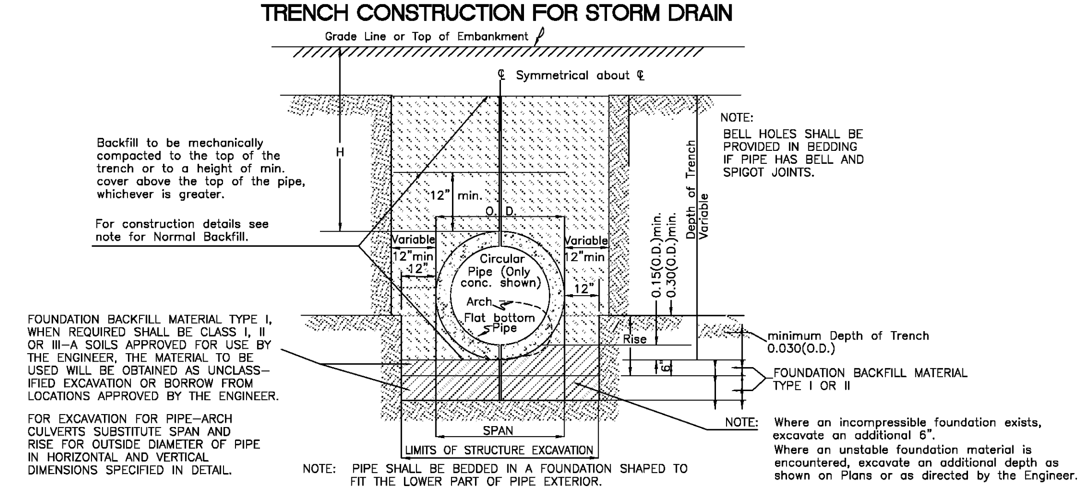

FOUNDATION BACKFILL MATERIAL TYPE I, WHEN REQUIRED SHALL BE CLASS I, II OR III-A SOILS APPROVED FOR USE BY THE ENGINEER, THE MATERIAL TO BE USED WILL BE OBTAINED AS UNCLASSIFIED EXCAVATION OR BORROW FROM LOCATIONS APPROVED BY THE ENGINEER.

FOR EXCAVATION FOR PIPE-ARCH CULVERTS SUBSTITUTE SPAN AND RISE FOR OUTSIDE DIAMETER OF PIPE IN HORIZONTAL AND VERTICAL DIMENSIONS SPECIFIED IN DETAIL.

NOTE: PIPE SHALL BE BEDDED IN A FOUNDATION SHAPED TO FIT THE LOWER PART OF PIPE EXTERIOR.

NOTE: Where an incompressible foundation exists, excavate an additional 6". Where an unstable foundation material is encountered, excavate an additional depth as shown on Plans or as directed by the Engineer.

GEORGIA 811 Utilities Protection Center, Inc
Know what's below. Call before you dig.

Development Planning & Engineering, Inc.
civil · sanitary · transportation · survey
5074 BRISTOL INDUSTRIAL WAY
SUITE A
BUFORD, GEORGIA 30518
(770) 271-2868
www.dpengr.com

PREPARED FOR:
FRIENDSHIP ROAD PROPERTIES, LLC
3101 TOWERCREEK PKWY.
SUITE 420
ATLANTA, GA 30339
MR. RANDY HERRON
(404) 578-8296

PROJECT NAME:
CREEKSIDE RETAIL

TASK:
CONSTRUCTION DETAILS

GEORGIA REGISTERED No. 34671 PROFESSIONAL ENGINEER REED J. PARKER
04/12/18

PROJECT INFORMATION:
CREEKSIDE RETAIL
Project Name
15-082F
Project Number
OLD WINDER HIGHWAY
Project Address
G.M.D. 1749
Parcel No.(s)
Land Lot / District
TOWN OF BRASELTON
HALL COUNTY
County, State

No.	DATE	REVISION
1		
2		
3		
4		
5		
6		
7		
8		
9		

RJP DESIGN	AS SHOWN SCALE
RJP DRAWN	14 of 17 SHEET
KWB CHECKED	
03/20/18 DATE	15-082F PROJECT No.

Order Plans @ www.LDHLine.com