SEPTEMBER 07, 2004

(FORMERLY SYSTEM NO. 147)

F RATINGS – 1, 2, 3 AND 4 HR (SEE ITEMS 2 AND 3)
T RATINGS – 0, 1, 2, 3 AND 4 HR (SEE ITEM 3)
L RATING AT AMBIENT – LESS THAN 1 CFM PER SQ. FT.
L RATING AT 400°F – LESS THAN 1 CFM PER SQ. FT.

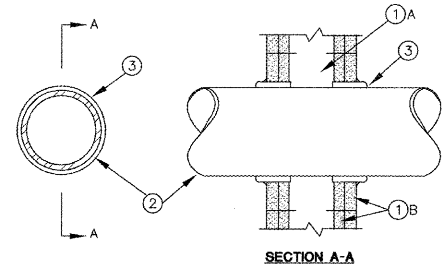

SECTION A-A

1. WALL ASSEMBLY – THE 1, 2, 3 OR 4 HR FIRE-RATED GYPSUM WALLBOARD/STUD WALL ASSEMBLY SHALL BE CONSTRUCTED OF THE MATERIALS AND IN THE MANNER DESCRIBED IN THE INDIVIDUAL U300 OR U400 SERIES WALL OR PARTITION DESIGNS IN THE UL FIRE RESISTANCE DIRECTORY AND SHALL INCLUDE THE FOLLOWING CONSTRUCTION FEATURES:

   A. STUDS – WALL FRAMING MAY CONSIST OF EITHER WOOD STUDS (MAX 2 HR FIRE RATED ASSEMBLIES) OR STEEL CHANNEL STUDS. WOOD STUDS TO CONSIST OF NOM 2 BY 4 IN. LUMBER SPACE 16 IN. OC WITH NOM 2 BY 4 IN. LUMBER END PLATES AND CROSS BRACES. STEEL STUDS TO BE MIN 3-5/8 IN. WIDE BY 1-3/8 IN. DEEP CHANNELS SPACED MAX 24 IN. OC.

   B. WALLBOARD, GYPSUM* – NOM 1/2 OR 5/8 IN. THICK, 4 FT. WIDE WITH SQUARE OR TAPERED EDGES. THE GYPSUM WALLBOARD TYPE, THICKNESS, NUMBER OF LAYERS, FASTENER TYPE AND SHEET ORIENTATION SHALL BE AS SPECIFIED IN THE INDIVIDUAL U300 OR U400 SERIES DESIGN IN THE UL FIRE RESISTANCE DIRECTORY. MAX DIA. OF OPENING IS 26 IN.

2. THROUGH-PENETRANT – ONE METALLIC PIPE, CONDUIT OR TUBING INSTALLED EITHER CONCENTRICALLY OR ECCENTRICALLY WITHIN THE FIRESTOP SYSTEM. THE ANNULAR SPACE BETWEEN PIPE, CONDUIT OR TUBING AND PERIPHERY OF OPENING SHALL BE MIN. OF 10 IN. (POINT CONTACT) TO MAX 2 IN. PIPE, CONDUIT OR TUBING TO BE RIGIDLY SUPPORTED ON BOTH SIDES OF WALL ASSEMBLY. THE FOLLOWING TYPES AND SIZES OF METALLIC PIPES, CONDUITS OR TUBING MAY BE USED:

   A. STEEL PIPE – NOM 24 IN. DIA. (OR SMALLER) SCHEDULE 10 (OR HEAVIER) STEEL PIPE.
   B. IRON PIPE – NOM 24 IN. DIA. (OR SMALLER) SERVICE WEIGHT (OR HEAVIER) CAST IRON SOIL PIPE, NOM. 12 IN. DIA. (OR SMALLER) OR CLASS 50 (OR HEAVIER) DUCTILE IRON PRESSURE PIPE.
   C. CONDUIT – NOM 6 IN. DIA. (OR SMALLER) STEEL CONDUIT OR NOM 4 IN. DIA. (OR SMALLER) STEEL ELECTRICAL METALLIC TUBING.
   D. COPPER TUBING – NOM 6 IN. DIA. (OR SMALLER) TYPE L (OR HEAVIER) COPPER TUBING.
   E. COPPER PIPE – NOM 6 IN. DIA. (OR SMALLER) REGULAR (OR HEAVIER) COPPER PIPE.
   F. THROUGH PENETRATING PRODUCT* – FLEXIBLE METAL PIPING THE FOLLOWING TYPES OF STEEL FLEXIBLE METAL GAS PIPING MA BE USED: OMEGA FLEX, INC. TITEFLEX CORP. A BUNDY CO WARD MFG, INC.

      1. NOM 2 IN. DIA. (OR SMALLER) STEEL FLEXIBLE METAL GAS PIPING. PLASTIC COVERING ON PIPING MAY OR MAY NOT BE REMOVED ON BOTH SIDES OF FLOOR OR WALL ASSEMBLY.
      2. NOM 1 IN. DIA. (OR SMALLER) STEEL FLEXIBLE METAL GAS PIPING. PLASTIC COVERING ON PIPING MAY OR MAY NOT BE REMOVED ON BOTH SIDES OF FLOOR OR WALL ASSEMBLY.
      3. NOM 1 IN. DIA. (OR SMALLER) STEEL FLEXIBLE METAL GAS PIPING. PLASTIC COVERING ON PIPING MAY OR MAY NOT BE REMOVED ON BOTH SIDES OF FLOOR OR WALL ASSEMBLY.

3. FILL, VOID OR CAVITY MATERIAL* – CAULK OR SEALANT – MIN. 5/8, 1-1/4, 1-7/8 AND 2-1/2 IN. THICKNESS OF CAULK FOR 1, 2, 3 AND 4 HR RATED ASSEMBLIES, RESPECTIVELY, APPLIED WITHIN ANNULUS, FLUSH WITH BOTH SURFACES OF WALL. MIN. 1/4 IN. DIA. BEAD OF CAULK APPLIED TO GYPSUM BOARD/PENETRANT INTERFACE AT POINT CONTACT LOCATION ON BOTH SIDES OF WALL. THE HOURLY F RATING OF THE FIRESTOP SYSTEM IS DEPENDENT UPON THE HOURLY FIRE RATING OF THE WALL ASSEMBLY IN WHICH IT IS INSTALLED., AS SHOWN IN THE FOLLOWING TABLE. THE HOURLY T RATING OF THE FIRESTOP SYSTEM IS DEPENDENT UPON THE TYPE OR SIZE OF THE PIPE OR CONDUIT AND THE HOURLY FIRE RATING OF THE WALL ASSEMBLY IN WHICH IT IS INSTALLED, AS TABULATED BELOW:

MAX PIPE OR CONDUIT DIA. IN.	F RATING, HR.	T RATING, HR
1	1 OR 2	0+, 1 OR 2
1	3 OR 4	3 OR 4
[illegible]	1 OR 2	0
[illegible]	3 OR 4	0
[illegible]	1 OR 2	0

+WHEN COPPER PIPE IS USED, T RATING IS 0 HR.

3M COMPANY – TYPE CP 25WB+ OR FB-3000 WT

* BEARING THE UL CLASSIFICATION MARKING.

Filename=XHEZ.W-L-1001

Copyright September 07 2004 Underwriters Laboratories, Inc.
Reprinted from the UL Online Certifications Directory with permission from Underwriter's Laboratories Inc.

F3 SYSTEM NO. W-L-1001
SCALE: NONE

SEPTEMBER 07, 2004

(FORMERLY SYSTEM NO. 147)

F RATINGS – 1 AND 2 HR (SEE ITEM 1)
T RATINGS – 3/4, 1 AND 1-1/2 HR (SEE ITEM 3)
L RATING AT AMBIENT – 2 CFM PER SQ. FT.
L RATING AT 400°F – LESS THAN 1 CFM PER SQ. FT.

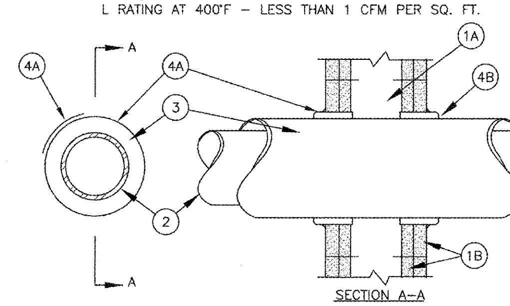

SECTION A–A

1. WALL ASSEMBLY – THE 1 OR 2 HR FIRE-RATED GYPSUM WALLBOARD/STUD WALL ASSEMBLY SHALL BE CONSTRUCTED OF THE MATERIALS AND IN THE MANNER DESCRIBED IN THE INDIVIDUAL U300 OR U400 SERIES WALL OR PARTITION DESIGN IN THE UL FIRE RESISTANCE DIRECTORY AND SHALL INCLUDE THE FOLLOWING CONSTRUCTION FEATURES:

   A. STUDS – WALL FRAMING MAY CONSIST OF EITHER WOOD STUDS OR STEEL CHANNEL STUDS. WOOD STUDS TO CONSIST OF NOM 2 BY 4 IN. (51 BY 102 MM) LUMBER SPACE 16 IN. (406 MM) OC WITH NOM 2 BY 4 IN. (51 BY 102 MM) LUMBER END PLATES AND CROSS BRACES. STEEL STUDS TO BE MIN 3-5/8 IN. (92 MM) WIDE BY 1-3/8 IN. (35 MM) DEEP CHANNELS SPACED MAX 24 IN. (610 MM) OC.

   B. WALLBOARD, GYPSUM* – NOM 5/8 IN. (16 MM) THICK, 4 FT. (122 CM) WIDE WITH SQUARE OR TAPERED EDGES. THE GYPSUM WALLBOARD TYPE, THICKNESS, NUMBER OF LAYERS, FASTENER TYPE AND SHEET ORIENTATION SHALL BE AS SPECIFIED IN THE INDIVIDUAL U300 OR U400 SERIES DESIGN IN THE UL FIRE RESISTANCE DIRECTORY. MAX DIA. OF OPENING IS 14-1/2 IN. (368 MM) FOR WOOD STUD WALLS AND 18 IN. (457 MM) FOR STEEL STUD WALLS.
   THE HOURLY F RATING OF THE FIRESTOP SYSTEM IS 1 HR. WHEN INSTALLED IN A 1 HR. FIRE RATED WALL AND 2 HR WHEN INSTALLED IN A 2 HR FIRE RATED WALL.

2. THROUGH PENETRATION – ONE METALLIC PIPE OR TUBING TO BE CENTERED WITHIN THE FIRESTOP SYSTEM. PIPE OR TUBING TO BE RIGIDLY SUPPORTED ON BOTH SIDES OF WALL ASSEMBLY. THE FOLLOWING TYPES AND SIZES OF METALLIC PIPES OR TUBING MAY BE USED:

   A. STEEL PIPE – NOM 12 IN. (305 MM) DIAM (OR SMALLER) SCHEDULE 10 (OR HEAVIER) STEEL PIPE.
   B. COPPER TUBING – NOM 6 IN. (152 MM) DIAM (OR SMALLER) TYPE L (OR HEAVIER) COPPER TUBING.
   C. COPPER PIPE – NOM 6 IN (152 MM) DIAM (OR SMALLER) REGULAR (OR HEAVIER) COPPER PIPE.

3. PIPE COVERING* – NOM. 1 OR 2 IN. (25 OR 51 MM) THICK HOLLOW CYLINDRICAL HEAVY DENSITY (MIN 3.5 PCF) GLASS FIBER UNITS JACKETED ON THE OUTSIDE WITH AN ALL SERVICE JACKET. LONGITUDINAL JOINTS SEALED WITH METAL FASTENERS OR FACTORY-APPLIED SELF-SEALING LAP TAPE. TRANSVERSE JOINTS SEALED WITH METAL FASTENERS OR WITH BUTT STRIP TAPE SUPPLIED WITH THE PRODUCT. WHEN NOM. 1 IN. (25 MM) THICK PIPE COVERING IS USED, THE ANNULAR SPACE BETWEEN THE PIPE COVERING AND THE CIRCULAR CUTOUT IN THE GYPSUM WALLBOARD LAYERS ON EACH SIDE OF THE WALL SHALL BE MIN. 1/4 IN. TO MAX 3/8 IN. (6 MM TO MAX 10 MM) WHEN NOM. 2 IN. (51 MM) THICK PIPE COVERING IS USED, THE ANNULAR SPACE BETWEEN THE PIPE COVERING AND THE CIRCULAR CUTOUT IN THE GYPSUM WALLBOARD LAYERS ON EACH SIDE OF THE WALL SHALL BE MIN 1/2 IN. TO MAX 3/4 IN. (13 MM TO MAX 19 MM).
   SEE PIPE AND EQUIPMENT COVERING MATERIALS (BRGU) CATEGORY IN BUILDING MATERIALS DIRECTORY FOR NAME OF MANUFACTURERS. ANY PIPE COVERING MATERIAL MEETING THE ABOVE SPECIFICATIONS AND BEARING THE UL CLASSIFICATION MARKING WITH A FLAME SPREAD INDEX OF 25 OR LESS AND A SMOKE DEVELOPED INDEX OF 50 OR LESS MAY BE USED.

   THE HOURLY T RATING OF THE FIRESTOP SYSTEM IS 3/4 HR WHEN NOM. 1 IN. (25 MM) THICK PIPE COVERING IS USED. THE HOURLY T RATING OF THE FIRESTOP SYSTEM IS 1 HR. AND 1-1/2 HR. WHEN NOM. 2 IN. (51 MM) THICK PIPE COVERING IS USED WITH 1 HR. AND 2 HR. FIRE RATED WALLS, RESPECTIVELY.

4. FIRESTOP SYSTEM – INSTALLED SYMMETRICALLY ON BOTH SIDES OF WALL ASSEMBLY. THE DETAILS OF THE FIRESTOP SYSTEM SHALL BE AS FOLLOWS:

   A. FILL, VOID OR CAVITY MATERIALS* – WRAP STRIP – NOM. 1/4 IN. (6 MM) THICK INTUMESCENT ELASTOMERIC MATERIAL FACED ON ONE SIDE WITH ALUMINUM FOIL, SUPPLIED IN 2 IN. (51 MM) WIDE STRIPS, NOM. 2 IN. (51 MM) WIDE STRIP TIGHTLY WRAPPED AROUND PIPE COVERING (FOIL SIDE OUT) WITH SEAM BUTTED. WRAP STRIP LAYER SECURELY BOUND WITH STEEL WIRE OR ALUMINUM FOIL TAPE AND SLID INTO ANNULAR SPACE APPROX 1-1/4 IN. (32 MM) SUCH THAT APPROX. 3/4 IN. (19 MM) OF THE WRAP STRIP WIDTH PROTRUDES FROM THE WALL SURFACE. ONE LAYER OF WRAP STRIP IS REQUIRED WHEN NOM. 1 IN. (25 MM) THICK PIPE COVERING IS USED. TWO LAYERS OF WRAP STRIP ARE REQUIRED WHEN NOM. 2 IN. (51 MM) THICK PIPE COVERING IS USED.

      3M COMPANY – FS-195+

   B. FILL, VOID OR CAVITY MATERIALS* – CAULK OR SEALANT – MIN. 1/4 IN. (6 MM) DIA. CONTINUOUS BEAD APPLIED TO THE WRAP STRIP/WALL INTERFACE AND TO THE EXPOSED EDGE OF THE WRAP STRIP LAYER APPROX 3/4 IN. (19 MM) FROM THE WALL SURFACE.

      3M COMPANY – CP 25WB+, IC 15WB, FIREDAM 150+ OR FB-3000 WT

* BEARING THE UL CLASSIFICATION MARKING.

Copyright September 07 2004 Underwriters Laboratories, Inc.
Reprinted from the UL Online Certifications Directory with permission from Underwriter's Laboratories Inc.

F5 SYSTEM NO. W-L-5001
SCALE: NONE

Design No. U465
September 18, 2012
Nonbearing Wall Rating —1 HR.

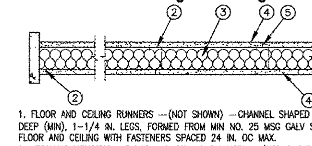

1. FLOOR AND CEILING RUNNERS —(NOT SHOWN) —CHANNEL SHAPED RUNNERS, 3-5/8 IN. DEEP (MIN), 1-1/4 IN. LEGS, FORMED FROM MIN NO. 25 MSG GALV STEEL, ATTACHED TO FLOOR AND CEILING WITH FASTENERS SPACED 24 IN. OC MAX.
1A. FRAMING MEMBERS*—FLOOR AND CEILING RUNNERS —(NOT SHOWN) —AS AN ALTERNATE TO ITEM 1 – CHANNEL SHAPED, MIN 3-5/8 IN. DEEP, ATTACHED TO FLOOR AND CEILING WITH FASTENERS 24 IN. OC. MAX.

ALLSTEEL & GYPSUM PRODUCTS INC —TYPE SUPREME FRAMING SYSTEM
CONSOLIDATED FABRICATORS CORP, BUILDING PRODUCTS DIV —TYPE SUPREME FRAMING SYSTEM
QUAIL RUN BUILDING MATERIALS INC —TYPE SUPREME FRAMING SYSTEM
SCAFCO STEEL STUD MANUFACTURING CO —TYPE SUPREME FRAMING SYSTEM
STEEL CONSTRUCTION SYSTEMS INC —TYPE SUPREME FRAMING SYSTEM
UNITED METAL PRODUCTS INC —TYPE SUPREME FRAMING SYSTEM

1B. FRAMING MEMBERS* – FLOOR AND CEILING RUNNERS —NOT SHOWN – IN LIEU OF ITEM 1 —FOR USE WITH ITEM 2B, PROPRIETARY CHANNEL SHAPED RUNNERS, 1-1/4 IN. WIDE BY MIN 3-5/8 IN. DEEP FABRICATED FROM MIN 0.020 IN. THICK GALV STEEL, ATTACHED TO FLOOR AND CEILING WITH FASTENERS SPACED 24 IN. OC MAX.

CALIFORNIA EXPANDED METAL PRODUCTS CO —VIPER20™ TRACK
CRACO MFG INC —SMARTERTRACK20™, SMARTTRACK20™
MARINO/WARE, DIV OF WARE INDUSTRIES INC —VIPER20™ TRACK
PHILLIPS MFG CO L L C —VIPER20™ TRACK
TELLING INDUSTRIES L L C —VIPER20™ TRACK

1C. FLOOR AND CEILING RUNNERS —(NOT SHOWN)—FOR USE WITH ITEM 2C– CHANNEL SHAPED, FABRICATED FROM MIN 20 MSG CORROSION-PROTECTED OR GALV STEEL, MIN DEPTH TO ACCOMMODATE STUD SIZE, WITH MIN 1 IN. LONG LEGS, ATTACHED TO FLOOR AND CEILING WITH FASTENERS SPACED MAX 24 IN. OC.
1D. FRAMING MEMBERS*—FLOOR AND CEILING RUNNERS —NOT SHOWN – IN LIEU OF ITEMS 1 THROUGH 1C —FOR USE WITH ITEM 2D AND 4G ONLY, PROPRIETARY CHANNEL SHAPED RUNNERS, 1-1/4 IN. DEEP BY MIN 3-5/8 IN. WIDE FABRICATED FROM MIN 0.018 IN. THICK GALV STEEL, ATTACHED TO FLOOR AND CEILING WITH FASTENERS SPACED 24 IN. OC MAX.

CLARKDIETRICH BUILDING SYSTEMS —CD PROTRAK
DMFCWBS L L C —PROTRAK
MBA BUILDING SUPPLIES —PROTRAK
SOUTHEASTERN STUD & COMPONENTS INC —PROTRAK
STEEL STRUCTURAL SYSTEMS L L C —TRI-S PROTRAK

1E. FRAMING MEMBERS*—FLOOR AND CEILING RUNNERS —NOT SHOWN – IN LIEU OF ITEMS 1 THROUGH 1D —FOR USE WITH ITEM 2E AND 4I ONLY, PROPRIETARY CHANNEL SHAPED RUNNERS, 1-1/4 IN. DEEP BY MIN 3-5/8 IN. WIDE FABRICATED FROM MIN 0.018 IN. THICK GALV STEEL, ATTACHED TO FLOOR AND CEILING WITH FASTENERS SPACED 24 IN. OC MAX.

TELLING INDUSTRIES L L C —TRUE-TRACK™

1F. FRAMING MEMBERS*—FLOOR AND CEILING RUNNERS —NOT SHOWN – IN LIEU OF ITEMS 1 THROUGH 1E —FOR USE WITH ITEM 2, CHANNEL SHAPED RUNNERS, 1-1/4 IN. DEEP BY MIN 3-5/8 IN. WIDE FABRICATED FROM MIN 25 MSG STEEL, ATTACHED TO FLOOR AND CEILING WITH FASTENERS SPACED 24 IN. OC MAX.

KIRII (HONG KONG) LTD —TYPE KIRII

1G. FRAMING MEMBERS*—FLOOR AND CEILING RUNNERS —NOT SHOWN – IN LIEU OF ITEMS 1 THROUGH 1F —FOR USE WITH ITEM 2, CHANNEL SHAPED RUNNERS, 1-1/4 IN. DEEP BY MIN 3-5/8 IN. WIDE, ATTACHED TO FLOOR AND CEILING WITH FASTENERS SPACED 24 IN. OC MAX.

STUDCO BUILDING SYSTEMS —CROCSTUD TRACK

1H. FLOOR AND CEILING RUNNERS —(NOT SHOWN) —CHANNEL SHAPED, FABRICATED FROM MIN 0.02 IN. GALV STEEL, MIN WIDTH TO ACCOMMODATE STUD SIZE, WITH MIN 1 IN. LONG LEGS, FOR USE WITH STUDS SPECIFIED BELOW AND FABRICATED FROM MIN 0.02 IN. GALV STEEL OR THICKER, ATTACHED TO FLOOR AND CEILING WITH FASTENERS SPACED MAX 24 IN. OC.

MARINO/WARE, DIV OF WARE INDUSTRIES INC —VIPER20™ TRACK VT100.

2. STEEL STUDS —CHANNEL SHAPED, 3-5/8 IN. DEEP (MIN), FORMED FROM MIN NO. 25 MSG GALV STEEL SPACED 24 IN. OC MAX. STUDS TO BE CUT 3/4 IN. LESS THAN ASSEMBLY HEIGHT.
2A. FRAMING MEMBERS*—STEEL STUDS —AS AN ALTERNATE TO ITEM 2 – CHANNEL SHAPED STUDS, MIN 3-5/8 IN. DEEP, SPACED A MAX OF 24 IN. OC. STUDS TO BE CUT 3/4 IN. LESS THAN ASSEMBLY HEIGHT.

ALLSTEEL & GYPSUM PRODUCTS INC —TYPE SUPREME FRAMING SYSTEM
CONSOLIDATED FABRICATORS CORP, BUILDING PRODUCTS DIV —TYPE SUPREME FRAMING SYSTEM
QUAIL RUN BUILDING MATERIALS INC —TYPE SUPREME FRAMING SYSTEM
SCAFCO STEEL STUD MANUFACTURING CO —TYPE SUPREME FRAMING SYSTEM
STEEL CONSTRUCTION SYSTEMS INC —TYPE SUPREME FRAMING SYSTEM
UNITED METAL PRODUCTS INC —TYPE SUPREME FRAMING SYSTEM

2B. FRAMING MEMBERS* – STEEL STUDS —NOT SHOWN – IN LIEU OF ITEM 2 —FOR USE WITH ITEM 1B, PROPRIETARY CHANNEL SHAPED STEEL STUDS, 1-1/4 IN. WIDE BY MIN 3-5/8 IN. DEEP FABRICATED FROM MIN 0.020 IN. THICK GALV STEEL. STUDS CUT 3/4 IN. LESS IN LENGTH THAN ASSEMBLY HEIGHT.

CALIFORNIA EXPANDED METAL PRODUCTS CO —VIPER20™
CRACO MFG INC —SMARTERSTUD20™, SMARTSTUD20™
MARINO/WARE, DIV OF WARE INDUSTRIES INC —VIPER20™
PHILLIPS MFG CO L L C —VIPER20™
TELLING INDUSTRIES L L C —VIPER20™
2C. STEEL STUDS —(AS AN ALTERNATE TO ITEM 2, FOR USE WITH ITEM 4E) CHANNEL SHAPED, FABRICATED FROM MIN 20 MSG CORROSION-PROTECTED OR GALV STEEL, 3-1/2 IN. MIN DEPTH, SPACED A MAX OF 16 IN. OC. STUDS FRICTION-FIT INTO FLOOR AND CEILING RUNNERS. STUDS TO BE CUT 5/8 TO 3/4 IN. LESS THAN ASSEMBLY HEIGHT.

2D. FRAMING MEMBERS*—STEEL STUDS —AS AN ALTERNATE TO ITEMS 2 THROUGH 2C– FOR USE WITH ITEM 1D AND 4G ONLY, CHANNEL SHAPED STUDS, MIN 3-5/8 IN. WIDE FABRICATED FROM MIN 0.018 IN. THICK GALV STEEL, SPACED A MAX OF 24 IN. OC. STUDS TO BE CUT 1/2 IN. LESS THAN ASSEMBLY HEIGHT.

CLARKDIETRICH BUILDING SYSTEMS —CD PROSTUD
DMFCWBS L L C —PROSTUD
MBA BUILDING SUPPLIES —PROSTUD
SOUTHEASTERN STUD & COMPONENTS INC —PROSTUD
STEEL STRUCTURAL SYSTEMS L L C —TRI-S PROSTUD

2E. FRAMING MEMBERS*—STEEL STUDS —AS AN ALTERNATE TO ITEMS 2 THROUGH 2D– FOR USE WITH ITEM 1E AND 4I ONLY, CHANNEL SHAPED STUDS, MIN 3-5/8 IN. WIDE FABRICATED FROM MIN 0.018 IN. THICK GALV STEEL, SPACED A MAX OF 24 IN. OC. STUDS TO BE CUT 1/2 IN. LESS THAN ASSEMBLY HEIGHT.

TELLING INDUSTRIES L L C —TRUE-STUD™

2F. FRAMING MEMBERS*—STEEL STUDS —AS AN ALTERNATE TO ITEMS 2 THROUGH 2E– FOR USE WITH ITEM 1F, CHANNEL SHAPED STUDS, MIN 3-5/8 IN. WIDE FABRICATED FROM MIN 25 MSG STEEL, SPACED A MAX OF 24 IN. OC. STUDS TO BE CUT 1/2 IN. LESS THAN ASSEMBLY HEIGHT.

KIRII (HONG KONG) LTD —TYPE KIRII

2G. FRAMING MEMBERS* – STEEL STUDS —NOT SHOWN – IN LIEU OF ITEM 2 THROUGH 2F – FOR USE WITH ITEM 1G. PROPRIETARY CHANNEL SHAPED STUDS, MINIMUM 3-5/8 IN. WIDE, STUDS TO BE CUT 1/2 IN. LESS THAN THE ASSEMBLY HEIGHT.
STUDCO BUILDING SYSTEMS —CROCSTUD

3. BATTS AND BLANKETS* —(OPTIONAL) —MINERAL WOOL OR GLASS FIBER BATTS PARTIALLY OR COMPLETELY FILLING STUD CAVITY.
SEE BATTS AND BLANKETS (BZJZ) CATEGORY FOR NAMES OF CLASSIFIED COMPANIES.

3A. FIBER, SPRAYED* —AS AN ALTERNATE TO BATTS AND BLANKETS (ITEM 3) —SPRAY APPLIED CELLULOSE MATERIAL. THE FIBER IS APPLIED WITH WATER TO COMPLETELY FILL THE ENCLOSED CAVITY IN ACCORDANCE WITH THE APPLICATION INSTRUCTIONS SUPPLIED WITH THE PRODUCT. NOMINAL DRY DENSITY OF 3.0 LB/FT3. ALTERNATE APPLICATION METHOD: THE FIBER IS APPLIED WITH U.S. GREENFIBER LLC TYPE AD100 HOT MELT ADHESIVE AT A NOMINAL RATIO OF ONE PART ADHESIVE TO 6.6 PARTS FIBER TO COMPLETELY FILL THE ENCLOSED CAVITY IN ACCORDANCE WITH THE APPLICATION INSTRUCTIONS SUPPLIED WITH THE PRODUCT. NOMINAL DRY DENSITY OF 2.5 LB/FT3.

U S GREENFIBER L L C —COCOON2 STABILIZED OR COCOON-FRM (FIRE RATED MATERIAL)

3B. FIBER, SPRAYED* —AS AN ALTERNATE TO BATTS AND BLANKETS (ITEM 3) AND ITEM 3A – SPRAY APPLIED CELLULOSE INSULATION MATERIAL. THE FIBER IS APPLIED WITH WATER TO INTERIOR SURFACES IN ACCORDANCE WITH THE APPLICATION INSTRUCTIONS SUPPLIED WITH THE PRODUCT. APPLIED TO COMPLETELY FILL THE ENCLOSED CAVITY. MINIMUM DRY DENSITY OF 4.3 POUNDS PER CUBIC FT.

NU-WOOL CO INC —CELLULOSE INSULATION

3C. FIBER, SPRAYED* —AS AN ALTERNATE TO BATTS AND BLANKETS (ITEM 3) – SPRAY APPLIED CELLULOSE FIBER. THE FIBER IS APPLIED WITH WATER TO COMPLETELY FILL THE ENCLOSED CAVITY IN ACCORDANCE WITH THE APPLICATION INSTRUCTIONS SUPPLIED WITH THE PRODUCT. THE MINIMUM DRY DENSITY SHALL BE 4.30 LBS/FT3.

INTERNATIONAL CELLULOSE CORP —CELBAR-RL

3D. BATTS AND BLANKETS* —FOR USE WITH ITEM 8. NOM 3 IN. THICK, MINIMUM 3.4 PCF MINERAL WOOL BATTS, FRICTION FIT BETWEEN THE STUDS AND FLOOR AND CEILING RUNNERS. SEE BATTS AND BLANKETS (BZJZ) CATEGORY FOR NAMES OF MANUFACTURERS.

4. GYPSUM BOARD* —5/8 IN. THICK, 4 FT WIDE, ATTACHED TO STEEL STUDS AND FLOOR AND CEILING TRACK WITH 1 IN. LONG, TYPE S STEEL SCREWS SPACED 8 IN. OC. ALONG EDGES OF BOARD AND 12 IN. OC IN THE FIELD OF THE BOARD. JOINTS ORIENTED VERTICALLY AND STAGGERED ON OPPOSITE SIDES OF THE ASSEMBLY. WHEN ATTACHED TO ITEM 6 (RESILIENT CHANNELS) OR 6A (FURRING CHANNELS), GYPSUM BOARD IS SCREW ATTACHED TO FURRING CHANNELS WITH 1 IN. LONG, TYPE S STEEL SCREWS SPACED 12 IN. OC.

ACADIA DRYWALL SUPPLIES LTD —TYPE X
AMERICAN GYPSUM CO —TYPES AG-C, AGX-1, M-GLASS
BEIJING NEW BUILDING MATERIALS PUBLIC LTD CO —TYPE DBX-1.
CGC INC —TYPES AR, C, IP-AR, IP-X1, IP-X2, IPC-AR, SCX, SHX, WRC OR WRX.
CERTAINTEED GYPSUM INC —TYPES 1, EGRG, GLASROC, TYPE X, TYPE C, SILENTFX, 5/8" EASI-LITE TYPE X.
CERTAINTEED GYPSUM CANADA INC —TYPE C, TYPE X, TYPE ABUSE-RESISTANT, 5/8" EASI-LITE TYPE X.
GEORGIA-PACIFIC GYPSUM L L C —TYPES 5, 6, 9, C, DAP, DD, DA, DAPC, DGG, DS, GPFS6, LS.
LAFARGE NORTH AMERICA INC —TYPES LGFC2, LGFC2A, LGFC6, LGFC6A, LGFC-C, LGFC-C/A, LGFC-WD, LGLLX.
NATIONAL GYPSUM CO —TYPES FSK, FSK-C, FSK-G, FSW-C, FSW-G, FSW, FSW-3, FSW-5, FSW-6, FSL.
PABCO BUILDING PRODUCTS L L C, DBA PABCO GYPSUM —TYPES PG-C, PG-9, PG-11, PGS-WRS.
PANEL REY S A —TYPES GREX, PRX, RHX, MDX, ETX.
SIAM GYPSUM INDUSTRY (SARABURI) CO LTD —TYPE EXT.
TEMPLE-INLAND —TYPE X, VENEER PLASTER BASE – TYPE X, WATER RATED – TYPE X, SHEATHING – TYPE X, SOFFIT – TYPE X, TG-C, GREENGLASS TYPE X, TYPE X COMFORTGUARD SOUND DEADENING GYPSUM BOARD.

UNITED STATES GYPSUM CO —TYPES AR, C, FRX-G, IP-AR, IP-X1, IP-X2, IPC-AR, SCX, SHX, WRC, WRX, USGX (JOINT TAPE AND COMPOUND, ITEM 5, OPTIONAL FOR USE WITH TYPE USGX).

USG MEXICO S A DE C V —TYPES AR, C, IP-AR, IP-X1, IP-X2, IPC-AR, SCX, SHX, WRC OR WRX.

4A. GYPSUM BOARD* —(AS ALTERNATE TO ITEM 4) – NOM 5/8 IN. THICK GYPSUM PANELS WITH BEVELED, SQUARE OR TAPERED EDGES, APPLIED VERTICALLY OR HORIZONTALLY. VERTICAL JOINTS CENTERED OVER STUDS AND STAGGERED ONE STUD CAVITY ON OPPOSITE SIDES OF STUDS. HORIZONTAL EDGE JOINTS AND HORIZONTAL BUTT JOINTS ON OPPOSITE SIDES OF STUDS NEED NOT BE STAGGERED OR BACKED BY STEEL FRAMING. PANELS ATTACHED TO STEEL STUDS AND FLOOR RUNNER WITH 1 IN. LONG TYPE S STEEL SCREWS SPACED 8 IN. OC WHEN APPLIED HORIZONTALLY OR 8 IN. OC ALONG VERTICAL AND BOTTOM EDGES AND 12 IN. OC IN THE FIELD WHEN PANELS ARE APPLIED VERTICALLY. WHEN USED IN WIDTHS OTHER THAN 48 IN., GYPSUM PANELS TO BE INSTALLED HORIZONTALLY.

CGC INC —TYPES AR, C, IP-AR, IP-X1, IP-X2, IPC-AR, SCX, SHX, WRC OR WRX.
CERTAINTEED GYPSUM INC —TYPE X, TYPE C.
CERTAINTEED GYPSUM CANADA INC —TYPE X, TYPE C.
GEORGIA-PACIFIC GYPSUM L L C —TYPES DAP, DAPC, DGG, DS.
LAFARGE NORTH AMERICA INC —TYPE LGFC6A, LGFC-C/A
UNITED STATES GYPSUM CO —TYPE AR, C, FRX-G, IP-AR, IP-X1, IP-X2, IPC-AR, SCX, SHX, WRC, WRX, , USGX (JOINT TAPE AND COMPOUND, ITEM 5, OPTIONAL FOR USE WITH TYPE USGX).
USG MEXICO S A DE C V —TYPE AR, C, IP-AR, IP-X1, IP-X2, IPC-AR, SCX, SHX, WRC OR WRX.

4B. GYPSUM BOARD* —(AS AN ALTERNATE TO ITEMS 4 OR 4A) —NOM 3/4 IN. THICK, 4 FT WIDE, INSTALLED AS DESCRIBED IN ITEM 4A WITH SCREW LENGTH INCREASED TO 1-1/4 IN.

CGC INC —TYPES AR, IP-AR.
UNITED STATES GYPSUM CO —TYPES AR, IP-AR.
USG MEXICO S A DE C V —TYPES AR, IP-AR.

4C. GYPSUM BOARD* —AS AN ALTERNATE TO ITEMS 4, 4A, AND 4B – NOM. 5/8 IN. THICK GYPSUM PANELS, WITH SQUARE EDGES, APPLIED HORIZONTALLY. GYPSUM PANELS FASTENED TO FRAMING WITH 1 IN. LONG BUGLE HEAD STEEL SCREWS SPACED A MAX 8 IN. OC, WITH LAST 2 SCREWS 3/4 IN. AND 4 IN. FROM EACH EDGE OF BOARD. HORIZONTAL JOINTS NEED NOT BE BACKED BY STEEL FRAMING. HORIZONTAL EDGE JOINTS AND HORIZONTAL BUTT JOINTS ON OPPOSITE SIDES OF STUDS ON INTERIOR WALLS NEED NOT BE STAGGERED OR BACKED BY STEEL FRAMING.

TEMPLE-INLAND —GREENGLASS TYPE X.

4D. GYPSUM BOARD* —AS AN ALTERNATE TO ITEMS 4, 4A, 4B, AND 4C – NOM. 5/8 IN. THICK GYPSUM PANELS APPLIED HORIZONTALLY. HORIZONTAL JOINTS NEED NOT BE BACKED BY STEEL FRAMING. HORIZONTAL EDGE JOINTS AND HORIZONTAL BUTT JOINTS ON OPPOSITE SIDES OF STUDS NEED NOT BE STAGGERED. GYPSUM PANELS FASTENED TO FRAMING WITH 1 IN. LONG TYPE S STEEL SCREWS 1-1/2 IN. FROM BOARD EDGES, 3 IN. FROM BOARD EDGE AND EVERY 8 IN. OC IN THE FIELD. SCREWS SPACED A MAX 12 IN. ALONG THE TOP AND BOTTOM EDGES OF THE WALL.

NATIONAL GYPSUM CO —TYPES FSK, FSK-C, FSK-G, FSW-C, FSW-G, FSW.

4E. GYPSUM BOARD* —(AS AN ALTERNATE TO ITEMS 4 THROUGH 4D) – INSTALLED AS DESCRIBED IN ITEM 4. 5/8 IN. THICK, 4 FT. WIDE, PAPER SURFACED, APPLIED VERTICALLY ONLY AND FASTENED TO THE STUDS AND PLATES WITH 1 IN. LONG, TYPE S STEEL SCREWS SPACED, 8 IN. OC. NOT TO BE USED WITH ITEM 6.

NATIONAL GYPSUM CO —SOUNDBREAK XP TYPE X GYPSUM BOARD

4F. GYPSUM BOARD* —(NOT SHOWN) – (AS AN ALTERNATE TO ITEM 4 WHEN USED AS THE BASE LAYER ON ONE OR BOTH SIDES OF WALL. FOR DIRECT ATTACHMENT ONLY TO STEEL STUDS ITEM 2C) – NOM 5/8 IN. THICK LEAD BACKED GYPSUM PANELS WITH BEVELED, SQUARE OR TAPERED EDGES, APPLIED VERTICALLY. VERTICAL JOINTS CENTERED OVER STUDS AND STAGGERED MIN 1 STUD CAVITY ON OPPOSITE SIDES OF STUDS. GYPSUM BOARD SECURED TO STUDS WITH 1-1/4 IN. LONG TYPE S-12 STEEL SCREWS SPACED 8 IN. OC AT PERIMETER AND 12 IN. OC IN THE FIELD.

RAY-BAR ENGINEERING CORP —TYPE RB-LBG

4G. GYPSUM BOARD* —(AS AN ALTERNATE TO ITEMS 4 THROUGH 4F) —FOR USE WITH ITEMS 1D AND 2D ONLY, 5/8 IN. THICK, 4 FT WIDE, ATTACHED TO STEEL STUDS AND FLOOR AND CEILING TRACK WITH 1 IN. LONG, TYPE S STEEL SCREWS SPACED 8 IN. OC. ALONG EDGES OF BOARD AND 12 IN. OC IN THE FIELD OF THE BOARD. JOINTS ORIENTED VERTICALLY AND STAGGERED ON OPPOSITE SIDES OF THE ASSEMBLY.

LAFARGE NORTH AMERICA INC —TYPE LGFC6A, LGFC-C/A
NATIONAL GYPSUM CO —TYPES FSW
UNITED STATES GYPSUM CO —TYPE SCX

4H. WALL AND PARTITION FACINGS AND ACCESSORIES* —(AS AN ALTERNATE TO ITEMS 4 THROUGH 4G) —NOMINAL 5/8 IN. THICK, 4 FT WIDE PANELS, APPLIED VERTICALLY AND SECURED AS DESCRIBED IN ITEM 4.

SERIOUS ENERGY INC —TYPES QUIETROCK ES, QUIETROCK 527.

4I. GYPSUM BOARD* —(AS AN ALTERNATE TO ITEMS 4 THROUGH 4F) —FOR USE WITH ITEMS 1E AND 2E ONLY, 5/8 IN. THICK, 4 FT WIDE, ATTACHED TO STEEL STUDS AND FLOOR AND CEILING TRACK WITH 1 IN. LONG, TYPE S STEEL SCREWS SPACED 8 IN. OC. ALONG EDGES OF BOARD AND 12 IN. OC IN THE FIELD OF THE BOARD. JOINTS ORIENTED VERTICALLY AND STAGGERED ON OPPOSITE SIDES OF THE ASSEMBLY.

UNITED STATES GYPSUM CO —TYPE SCX

4J. GYPSUM BOARD* —(NOT SHOWN) – (AS AN ALTERNATE TO ITEM 4 WHEN USED AS THE BASE LAYER ON ONE OR BOTH SIDES OF WALL. FOR DIRECT ATTACHMENT ONLY TO STEEL STUDS ITEM 2C) – NOM 5/8 IN. THICK LEAD BACKED GYPSUM PANELS WITH BEVELED, SQUARE OR TAPERED EDGES, APPLIED VERTICALLY. VERTICAL JOINTS CENTERED OVER STUDS AND STAGGERED MIN 1 STUD CAVITY ON OPPOSITE SIDES OF STUDS. GYPSUM BOARD SECURED TO STUDS WITH 1-1/4 IN. LONG TYPE S-12 STEEL SCREWS SPACED 8 IN. OC AT PERIMETER AND 12 IN. OC IN THE FIELD. TO BE USED WITH LEAD BATTEN STRIPS (SEE ITEM 9A) OR LEAD DISCS (SEE ITEM 10A).

MAYCO INDUSTRIES INC —TYPE X-RAY SHIELDED GYPSUM

4K. GYPSUM BOARD* —(AS AN ALTERNATE TO ITEM 4 AND 4A, NOT FOR USE WITH ITEMS 1D, 1E, 2D AND 2E) – NOM. 5/8 IN. THICK GYPSUM PANELS WITH BEVELED, SQUARE OR TAPERED EDGES INSTALLED AS DESCRIBED IN ITEM 4 AND 4A.

CGC INC —TYPE ULX
UNITED STATES GYPSUM CO —TYPE ULX
USG MEXICO S A DE C V —TYPE ULX

4L. GYPSUM BOARD* —(NOT SHOWN) – (AS AN ALTERNATE TO ITEM 4 WHEN USED AS THE BASE LAYER ON ONE OR BOTH SIDES OF WALL. FOR DIRECT ATTACHMENT ONLY TO STEEL STUDS ITEM 2C). NOM 5/8 IN. THICK LEAD BACKED GYPSUM PANELS WITH BEVELED, SQUARE OR TAPERED EDGES, APPLIED VERTICALLY. VERTICAL JOINTS CENTERED OVER STUDS AND STAGGERED MIN 1 STUD CAVITY ON OPPOSITE SIDES OF STUDS. WALLBOARD SECURED TO STUDS WITH 1-1/4 IN. LONG TYPE S-12 STEEL SCREWS GYPSUM PANEL STEEL SCREWS SPACED 8 IN. OC AT PERIMETER AND 12 IN. OC IN THE FIELD. LEAD BATTEN STRIPS REQUIRED BEHIND VERTICAL JOINTS OF LEAD BACKED GYPSUM WALLBOARD AND OPTIONAL AT REMAINING STUD LOCATIONS. LEAD BATTEN STRIPS, MIN 2 IN. WIDE, MAX 8 FT LONG WITH A MAX THICKNESS OF 0.14 IN. PLACED ON THE FACE OF STUDS AND ATTACHED TO THE STUD WITH CONSTRUCTION ADHESIVE AND TWO 1 IN. LONG TYPE S-12 PAN HEAD STEEL SCREWS, ONE AT THE TOP OF THE STRIP AND ONE AT THE BOTTOM OF THE STRIP. LEAD DISCS, NOMINAL 3/8 IN. DIAM BY MAX 0.085 IN. THICK. COMPRESSION FITTED OR ADHERED OVER THE SCREW HEADS. LEAD BATTEN STRIPS AND DISCS TO HAVE A PURITY OF 99.9% MEETING THE FEDERAL SPECIFICATION QQ-L-201F, GRADE "C".
RADIATION PROTECTION PRODUCTS INC —TYPE RPP – LEAD LINED DRYWALL

4M. GYPSUM BOARD* —(FOR USE WITH ITEM 8) – 5/8 IN. THICK, 4 FT WIDE, APPLIED VERTICALLY OVER MINERAL AND FIBER BOARD (ITEM 8) WITH VERTICAL JOINTS LOCATED ANYWHERE OVER STUD CAVITIES. SECURED TO MINERAL AND FIBER BOARDS WITH 2-1/2 IN. TYPE G SCREWS SPACED 8 IN. OC ALONG EDGES OF EACH VERTICAL JOINT AND 12 IN. OC IN INTERMEDIATE FIELD OF THE MINERAL AND FIBER BOARD (ITEM 8). SECURED TO OUTERMOST STUDS AND FLOOR AND CEILING RUNNERS WITH 2 IN. LONG TYPE S SCREWS SPACED 8 IN. OC. GYPSUM BOARD JOINTS COVERED WITH PAPER TAPE AND JOINT COMPOUND. SCREW HEADS COVERED WITH JOINT COMPOUND.

AMERICAN GYPSUM CO —TYPE AG-C
CERTAINTEED GYPSUM INC —TYPE FRPC, TYPE C
CERTAINTEED GYPSUM CANADA INC —TYPE C
CGC INC —TYPES C, IP-X2, IPC-AR
GEORGIA-PACIFIC GYPSUM L L C —TYPES 5, DAPC
LAFARGE NORTH AMERICA INC —TYPES LGFC-C, LGFC-C/A
NATIONAL GYPSUM CO —TYPES FSK [illegible]
PABCO BUILDING PRODUCTS L L C, DBA PABCO GYPSUM —TYPE PG-C.
PANEL REY S A —TYPE PRC
TEMPLE-INLAND —TYPE TG-C
UNITED STATES GYPSUM CO —TYPES C, IP-X2, IPC-AR
USG MEXICO S A DE C V —TYPES C, IP-X2, IPC-AR

5. JOINT TAPE AND COMPOUND —VINYL, DRY OR PREMIXED JOINT COMPOUND, APPLIED IN TWO COATS TO JOINTS AND SCREW HEADS; PAPER TAPE, 2 IN. WIDE, EMBEDDED IN FIRST LAYER OF COMPOUND OVER ALL JOINTS. AS AN ALTERNATE, NOMINAL 3/32 IN. THICK GYPSUM VENEER PLASTER MAY BE APPLIED TO THE ENTIRE SURFACE OF CLASSIFIED VENEER BASEBOARD. JOINTS REINFORCED. PAPER TAPE AND JOINT COMPOUND MAY BE OMITTED WHEN GYPSUM BOARDS ARE SUPPLIED WITH SQUARE EDGES.

6. RESILIENT CHANNEL —(OPTIONAL-NOT SHOWN) —25 MSG GALV STEEL RESILIENT CHANNELS SPACED VERTICALLY MAX 24 IN. OC, FLANGE PORTION ATTACHED TO EACH INTERSECTING STUD WITH 1/2 IN. LONG TYPE S-12 PAN HEAD STEEL SCREWS. MAY NOT BE USED WITH ITEM 4F OR 4J.

6A. STEEL FRAMING MEMBERS (NOT SHOWN)* —AS AN ALTERNATE TO ITEM 3, FURRING CHANNELS AND RESILIENT SOUND ISOLATION CLIP AS DESCRIBED BELOW:
A. FURRING CHANNELS —FORMED OF NO. 25 MSG GALV STEEL. 2-3/8 IN. WIDE BY 7/8 IN. DEEP, SPACED 24 IN. OC PERPENDICULAR TO STUDS. CHANNELS SECURED TO STUDS AS DESCRIBED IN ITEM B. ENDS OF ADJOINING CHANNELS ARE OVERLAPPED 6 IN. AND TIED TOGETHER WITH DOUBLE STRAND OF NO. 18 SWG GALV STEEL WIRE NEAR EACH END OF OVERLAP. AS AN ALTERNATE, ENDS OF ADJOINING CHANNELS MAY BE OVERLAPPED 6 IN. AND SECURED TOGETHER WITH TWO SELF-TAPPING NO. 6 FRAMING SCREWS, MIN 7/16 IN. LONG AT THE MIDPOINT OF THE OVERLAP, WITH ONE SCREW ON EACH FLANGE OF THE CHANNEL.
B. FRAMING MEMBERS* —USED TO ATTACH FURRING CHANNELS (ITEM A) TO STUDS (ITEM 1). CLIPS SPACED 48 IN. OC., AND SECURED TO STUDS WITH 1-5/8 IN. WAFER OR HEX HEAD TYPE S STEEL SCREW THROUGH THE CENTER GROMMET. FURRING CHANNELS ARE FRICTION FITTED INTO CLIPS.

PAC INTERNATIONAL INC —TYPE RSIC-1.

6B. FRAMING MEMBERS* —OPTIONAL – NOT SHOWN – USED AS AN ALTERNATE METHOD TO ATTACH RESILIENT CHANNELS (ITEM 6). CLIPS ATTACHED AT EACH INTERSECTION OF THE RESILIENT CHANNEL AND THE STEEL STUDS (ITEM 2). RESILIENT CHANNELS ARE FRICTION FITTED INTO CLIPS, AND THEN CLIPS ARE SECURED TO THE STUD WITH MIN. 1 IN. LONG TYPE S-12 PAN HEAD STEEL SCREWS THROUGH THE CENTER HOLE OF THE CLIP AND THE RESILIENT CHANNEL FLANGE.

KEENE BUILDING PRODUCTS CO INC —TYPE RC ASSURANCE.

7. WALL AND PARTITION FACINGS AND ACCESSORIES* —(OPTIONAL, NOT SHOWN) —NOMINAL 1/2 IN. THICK, 4 FT WIDE PANELS, FOR OPTIONAL USE AS AN ADDITIONAL LAYER ON ONE OR BOTH SIDES OF THE ASSEMBLY. PANELS ATTACHED IN ACCORDANCE WITH MANUFACTURER'S RECOMMENDATIONS. WHEN THE QR-510 PANEL IS INSTALLED BETWEEN THE STEEL FRAMING AND THE UL CLASSIFIED GYPSUM BOARD, THE REQUIRED UL CLASSIFIED GYPSUM BOARD LAYER(S) IS/ARE TO BE INSTALLED AS INDICATED AS TO FASTENER TYPE AND SPACING, EXCEPT THAT THE REQUIRED FASTENER LENGTH SHALL BE INCREASED BY A MINIMUM OF 1/2 IN. NOT EVALUATED OR INTENDED AS A SUBSTITUTE FOR THE REQUIRED LAYER(S) OF UL CLASSIFIED GYPSUM BOARD.

SERIOUS ENERGY INC —TYPE QUIETROCK QR-510.

8. MINERAL AND FIBER BOARD* —(OPTIONAL, NOT SHOWN) —FOR OPTIONAL USE AS AN ADDITIONAL LAYER ON ONE SIDE OF WALL. NOM 1/2 IN. THICK, 4 FT WIDE WITH LONG DIMENSION PARALLEL AND CENTERED OVER STUDS. ATTACHED TO STUDS AND FLOOR AND CEILING RUNNERS WITH 1-5/8 IN. LONG TYPE S STEEL SCREWS, SPACED 12 IN. OC AND 24 IN. OC ALONG ALL INTERMEDIATE FRAMING. THE REQUIRED UL CLASSIFIED GYPSUM BOARD LAYER (ITEM 4M) IS TO BE INSTALLED OVER THE MINERAL AND FIBER BOARDS. BATTS AND BLANKETS, ITEM 3D, AND ADHESIVE, ITEM 11, ARE REQUIRED.

HOMASOTE CO —HOMASOTE TYPE 440-32

9. LEAD BATTEN STRIPS —(NOT SHOWN, FOR USE WITH ITEM 4E) – LEAD BATTEN STRIPS, MIN 1-1/2 IN. WIDE, MAX 10 FT LONG WITH A MAX THICKNESS OF 0.125 IN. STRIPS PLACED ON THE INTERIOR FACE OF STUDS AND ATTACHED FROM THE EXTERIOR FACE OF THE STUD WITH TWO 1 IN. LONG TYPE S-12 PAN HEAD STEEL SCREWS, ONE AT THE TOP OF THE STRIP AND ONE AT THE BOTTOM OF THE STRIP. LEAD BATTEN STRIPS TO HAVE A PURITY OF 99.9% MEETING THE FEDERAL SPECIFICATION QQ-L-201F, GRADE "C". LEAD BATTEN STRIPS REQUIRED BEHIND VERTICAL JOINTS OF LEAD BACKED GYPSUM BOARD (ITEM 4E) AND OPTIONAL AT REMAINING STUD LOCATIONS. REQUIRED BEHIND VERTICAL JOINTS.
9A. LEAD BATTEN STRIPS —(NOT SHOWN, FOR USE WITH ITEM 4J) LEAD BATTEN STRIPS, 2 IN. WIDE, MAX 10 FT LONG WITH A MAX
THICKNESS OF 0.140 IN. STRIPS PLACED ON THE FACE OF STUDS AND ATTACHED TO THE STUD WITH TWO MIN. 1 IN. LONG MIN. TYPE S-8 PAN HEAD STEEL SCREWS, ONE AT THE TOP OF THE STRIP AND ONE AT THE BOTTOM OF THE STRIP OR WITH ONE MIN. 1 IN. LONG MIN. TYPE S-8 PAN HEAD STEEL SCREW AT THE TOP OF THE STRIP. LEAD BATTEN STRIPS TO HAVE A PURITY OF 99.9% MEETING THE FEDERAL SPECIFICATION QQ-L-201F, GRADES "A, B, C OR D". LEAD BATTEN STRIPS REQUIRED BEHIND VERTICAL JOINTS OF LEAD BACKED GYPSUM WALLBOARD (ITEM 4J) AND OPTIONAL AT REMAINING STUD LOCATIONS.

10. LEAD DISCS OR TABS —(NOT SHOWN, FOR USE WITH ITEM 4E) – USED IN LIEU OF OR IN ADDITION TO THE LEAD BATTEN STRIPS (ITEM 8) OR OPTIONAL AT OTHER LOCATIONS – MAX 3/4 IN. DIAM BY MAX 0.125 IN. THICK LEAD DISCS COMPRESSION FITTED OR ADHERED OVER STEEL SCREW HEADS OR MAX 1/2 IN. BY 1-1/4 IN. BY MAX 0.125 IN. THICK LEAD TABS PLACED ON GYPSUM BOARDS (ITEM 4E) UNDERNEATH SCREW LOCATIONS PRIOR TO THE INSTALLATION OF THE SCREWS. LEAD DISCS OR TABS TO HAVE A PURITY OF 99.9% MEETING THE FEDERAL SPECIFICATION QQ-L-201F, GRADE "C".

10A. LEAD DISCS —(NOT SHOWN, FOR USE WITH ITEM 4J) MAX 5/16 IN. DIAM BY MAX 0.140 IN. THICK LEAD DISCS COMPRESSION FITTED OR ADHERED OVER STEEL SCREW HEADS. LEAD DISCS TO HAVE A PURITY OF 99.9% MEETING THE FEDERAL SPECIFICATION QQ-L-201F, GRADES "A, B, C OR D".

11. ADHESIVE —NOT SHOWN – (FOR USE WITH ITEM 8) – CONSTRUCTION GRADE ADHESIVE APPLIED IN VERTICAL, SERPENTINE, NOMINAL 3/8 IN. WIDE BEADS DOWN THE LENGTH OF BOTH VERTICAL EDGES OF MINERAL AND FIBER BOARD (ITEM 8).

*BEARING THE UL CLASSIFICATION MARK

©2012 UL LLC

WHEN THE UL LEAF MARK IS ON THE PRODUCT, OR WHEN THE WORD "ENVIRONMENT" IS INCLUDED IN THE UL MARK, PLEASE SEARCH THE UL ENVIRONMENT DATABASE FOR ADDITIONAL INFORMATION REGARDING THIS PRODUCT'S CERTIFICATION.

THE APPEARANCE OF A COMPANY'S NAME OR PRODUCT IN THIS DATABASE DOES NOT IN ITSELF ASSURE THAT PRODUCTS SO IDENTIFIED HAVE BEEN MANUFACTURED UNDER UL'S FOLLOW-UP SERVICE. ONLY THOSE PRODUCTS BEARING THE UL MARK SHOULD BE CONSIDERED TO BE LISTED AND COVERED UNDER UL'S FOLLOW-UP SERVICE. ALWAYS LOOK FOR THE MARK ON THE PRODUCT.

UL PERMITS THE REPRODUCTION OF THE MATERIAL CONTAINED IN THE ONLINE CERTIFICATION DIRECTORY SUBJECT TO THE FOLLOWING CONDITIONS: 1. THE GUIDE INFORMATION, DESIGNS AND/OR LISTINGS (FILES) MUST BE PRESENTED IN THEIR ENTIRETY AND IN A NON-MISLEADING MANNER, WITHOUT ANY MANIPULATION OF THE DATA (OR DRAWINGS). 2. THE STATEMENT "REPRINTED FROM THE ONLINE CERTIFICATIONS DIRECTORY WITH PERMISSION FROM UL" MUST APPEAR ADJACENT TO THE EXTRACTED MATERIAL. IN ADDITION, THE REPRINTED MATERIAL MUST INCLUDE A COPYRIGHT NOTICE IN THE FOLLOWING FORMAT: "©2012 UL LLC".

NOTE: UL DESIGNS INDICATED ARE BASIS OF DESIGN ONLY. CONTRACTOR MAY SUBMIT EQUALLY RATED UL APPROVED SYSTEMS.

F7 UL DESIGN NO. U465
SCALE: NONE

REVISION NO.	REVISION DESCRIPTION	By Date
Revisions		By Date

Department of Veterans Affairs
Charlie Norwood
VA Medical Center
1 Freedom Way
Augusta, Ga. 30904

SEAL
JONATHAN M. CARR, REGISTERED ARCHITECT, 11080, NORTH CAROLINA, CHARLOTTE, NC 02/10/17

Architect/Engineer Address
Harrell, Saltrick & Hopper
Design & Management Solutions for the Built Environment
8016 TOWER POINT DRIVE
CHARLOTTE, NC 28227
P 704.814.1320
F 704.321.0833
WWW.HSHPC.COM
COPYRIGHT © 2012 HARRELL SALTRICK & HOPPER, PC
HSH PROJECT # 12015

Recommended Approvals:	
1. MEDICAL CENTER DIRECTOR	6. OPERATIONS SERVICE LINE MANAGER
2. ASSISTANT DIRECTOR	7. INFECTION CONTROL MANAGER
3. CHIEF OF STAFF	8. SAFETY MANAGER
4. ASSOC. DIRECTOR	9. GENERAL ENGINEER
5. SERVICE LINE MGRS.	10. COR

Drawing Title	Project Title			Date
UL ASSEMBLIES	RENOVATE MENTAL HEALTH UNITS			February 10, 2017
				Project Number: 509-12-104
100% CONSTRUCTION DOCUMENTS	Drawn: GG	Building Number	AutoCAD File Name	DRAWING No. GI107
FULLY SPRINKLERED	Checked	Reviewed	Const. Contract No.	

Veterans Affairs

Order Plans @ www.LDLine.com