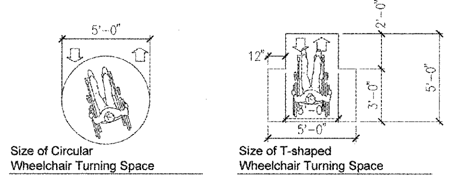

Size of Circular Wheelchair Turning Space

Size of T-shaped Wheelchair Turning Space

A1 WHEELCHAIR TURNING SPACE
SCALE: 1/4" = 1'-0"

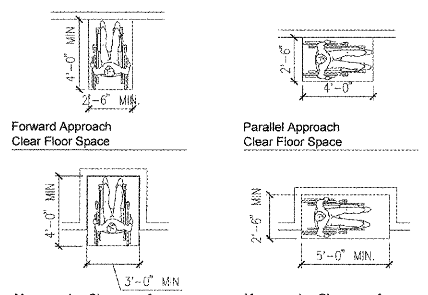

Forward Approach Clear Floor Space

Parallel Approach Clear Floor Space

Maneuvering Clearance for a Forward Approach to an Alcove

Maneuvering Clearance for a Parallel Approach to an Alcove

C1 CLEAR FLOOR SPACE
SCALE: 1/4" = 1'-0"

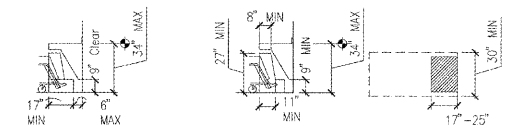

Toe Clearance

Knee Clearance

D1 KNEE AND TOE CLEARANCES
SCALE: 1/4" = 1'-0"

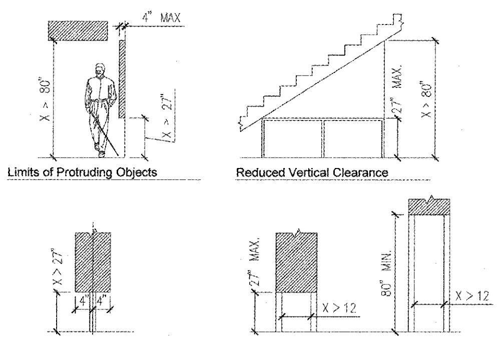

Limits of Protruding Objects

Reduced Vertical Clearance

Single Post-Mounted Protruding Object

Multiple Post-Mounted Protruding Objects

E1 PROTRUDING OBJECTS
SCALE: 1/4" = 1'-0"

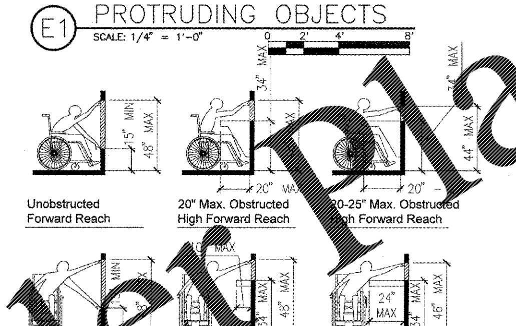

Unobstructed Forward Reach

20" Max. Obstructed High Forward Reach

20-25" Max. Obstructed High Forward Reach

Unobstructed Side Reach

10" Max. Obstructed High Side Reach

24" Max. Obstructed High Side Reach

F1 REACH RANGES
SCALE: 1/4" = 1'-0"

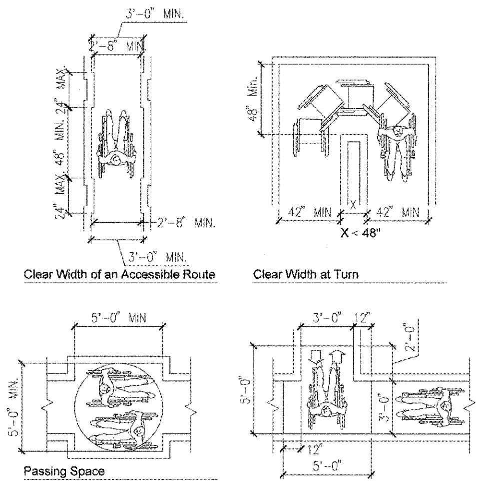

Clear Width of an Accessible Route

Clear Width at Turn

Passing Space

B3 ACCESSIBLE ROUTES
SCALE: 1/4" = 1'-0"

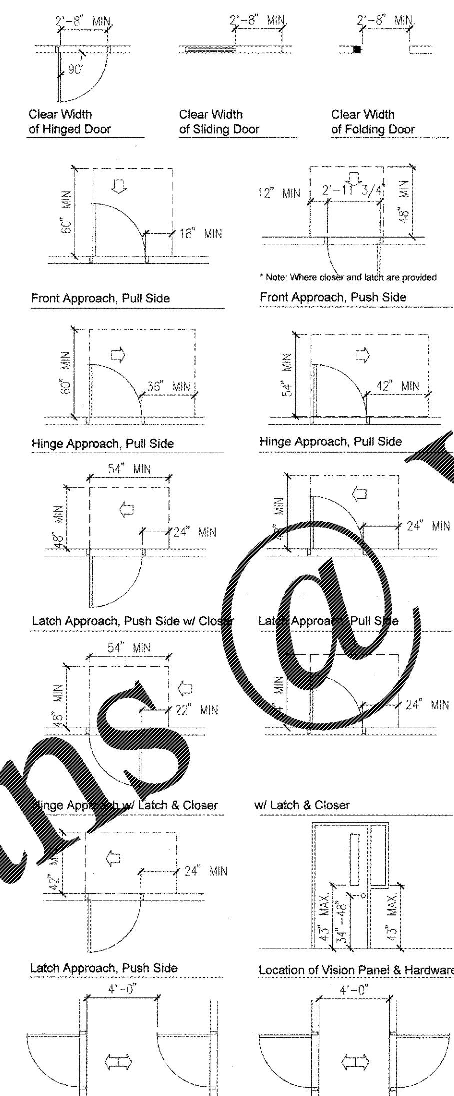

Clear Width of Hinged Door

Clear Width of Sliding Door

Clear Width of Folding Door

Front Approach, Pull Side

Front Approach, Push Side

Hinge Approach, Pull Side

Hinge Approach, Pull Side

Latch Approach, Push Side w/ Closer

Latch Approach, Pull Side

Hinge Approach w/ Latch & Closer

w/ Latch & Closer

Latch Approach, Push Side

Location of Vision Panel & Hardware

Two Doors in Series

Two Doors in Series

F3 DOORS AND DOORWAYS
SCALE: 1/4" = 1'-0"

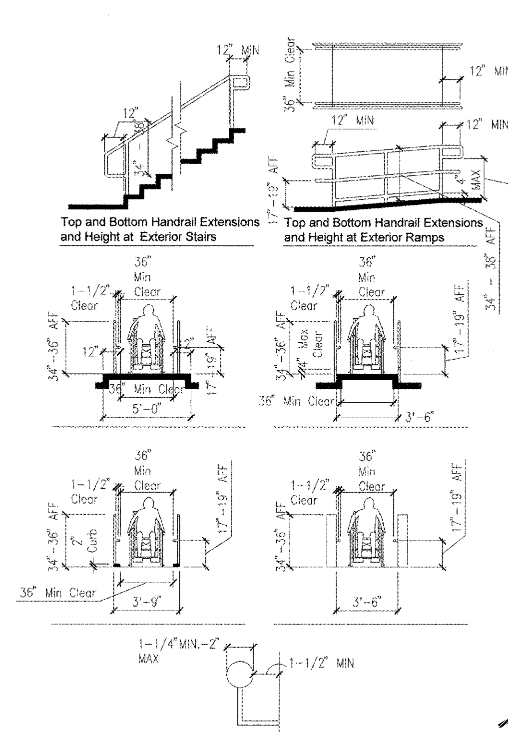

Top and Bottom Handrail Extensions and Height at Exterior Stairs

Top and Bottom Handrail Extensions and Height at Exterior Ramps

Handrail Clearance and Cross Section

C5 HANDRAILS
SCALE: 1/4" = 1'-0"

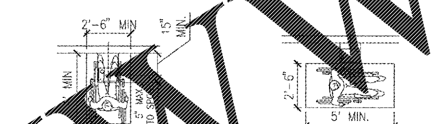

Drinking Fountain Spout Location: Forward Approach

Drinking Fountain Spout Location: Parallel Approach

D5 DRINKING FOUNTAINS
SCALE: 1/4" = 1'-0"

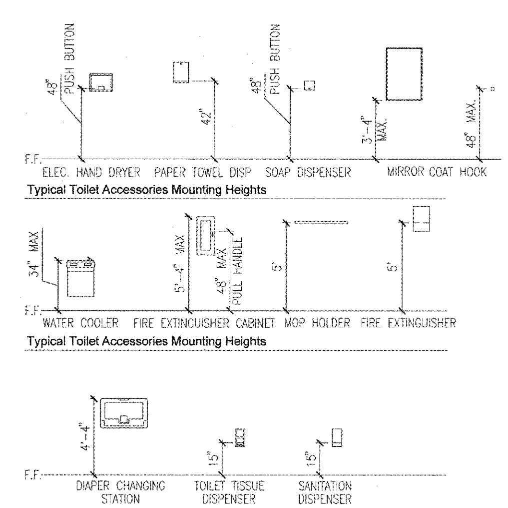

Typical Toilet Accessories Mounting Heights

Typical Toilet Accessories Mounting Heights

Typical Toilet Accessories Mounting Heights

F5 ACCESSORIES
SCALE: 1/4" = 1'-0"

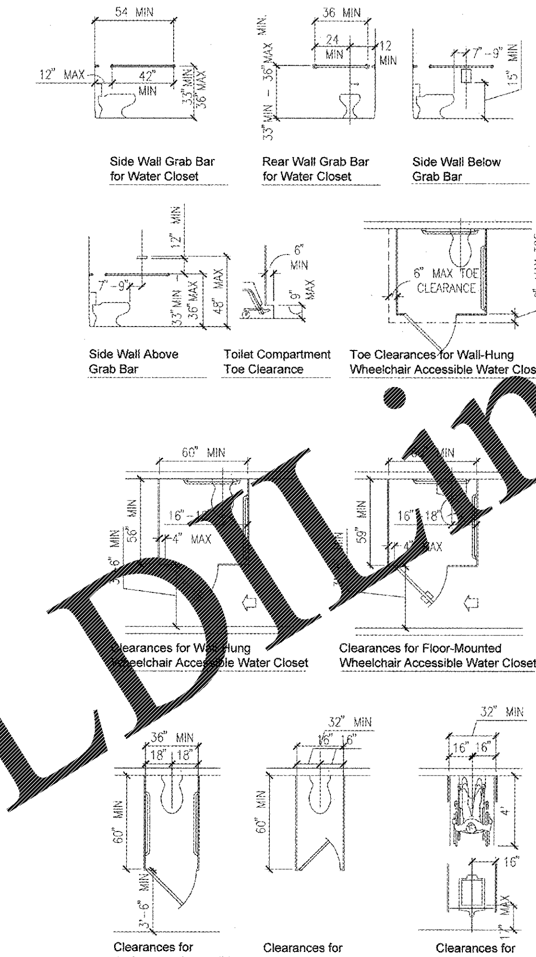

Side Wall Grab Bar for Water Closet

Rear Wall Grab Bar for Water Closet

Side Wall Below Grab Bar

Side Wall Above Grab Bar

Toilet Compartment Toe Clearance

Toe Clearances for Wall-Hung Wheelchair Accessible Water Closet

Clearances for Wall-Hung Wheelchair Accessible Water Closet

Clearances for Floor-Mounted Wheelchair Accessible Water Closet

Clearances for Ambulatory Accessible Water Closet

Clearances for Standard Water Closet

Clearances for Accessible Urinals

D7 WATER CLOSETS & URINALS
SCALE: 1/4" = 1'-0"

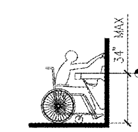

Height of Lavatory & Sink

E7 LAVATORIES & SINKS
SCALE: 1/4" = 1'-0"

GENERAL SHEET NOTES

A. ALL ACCESSIBILITY DETAILS COMPLY WITH FEDERAL ADAAG AND THE ARCHITECTURAL BARRIERS ACT.

B. DETAILS ARE PROVIDED FOR REFERENCE ONLY. THESE DETAILS SHOW MINIMUM REQUIREMENTS. REFER TO ARCHITECTURAL DRAWINGS FOR ACTUAL DIMENSIONS. WHERE NOTHING IS INDICATED ON OTHER DRAWINGS, G.C. IS TO REFER TO THESE DETAILS.

C. ADDITIONAL REQUIREMENTS ARE SHOWN ON OTHER SHEETS IN CONSTRUCTION DOCUMENTS, THIS SHEET DOES NOT REPRESENT ALL REQUIREMENTS.

D. NOTIFY ARCHITECT OF CONFLICTS BETWEEN THIS SHEET AND OTHER SHEETS.

E. REINFORCING SHALL BE PROVIDED AND INSTALLED AT ALL GRAB BAR LOCATIONS, SEE F3/GI105.

Order Plans @ WWW.LDILine.com

REVISION NO.	REVISION DESCRIPTION	
Revisions		By Date

Department of Veterans Affairs
Charlie Norwood
VA Medical Center
1 Freedom Way
Augusta, Ga. 30904

SEAL: JONATHAN M. CARR, REGISTERED ARCHITECT, 11080, NORTH CAROLINA, CHARLOTTE, NC — 02/10/17

Architect/Engineer Address

Harrell, Saltrick & Hopper
Design & Management Solutions for the Built Environment
8016 TOWER POINT DRIVE, CHARLOTTE, NC 28227
P 704.814.1320
F 704.321.0833
WWW.HSHPC.COM

COPYRIGHT © 2012 HARRELL SALTRICK & HOPPER, PC

HSH PROJECT # 12015

Recommended Approvals:	
1. MEDICAL CENTER DIRECTOR	6. OPERATIONS SERVICE LINE MANAGER
2. ASSISTANT DIRECTOR	7. INFECTION CONTROL MANAGER
3. CHIEF OF STAFF	8. SAFETY MANAGER
4. ASSOC. DIRECTOR	9. GENERAL ENGINEER
5. SERVICE LINE MGRS.	10. COR

Drawing Title	Project Title	Date
TYPICAL ACCESSIBILITY DETAILS	RENOVATE MENTAL HEALTH UNITS	February 10, 2017
100% CONSTRUCTION DOCUMENTS	Drawn: BWS III / Building Number / AutoCAD File Name	Project Number: 509-12-104
FULLY SPRINKLERED	Checked / Reviewed / Const. Contract No.	DRAWING No.: GI002

Veterans Affairs