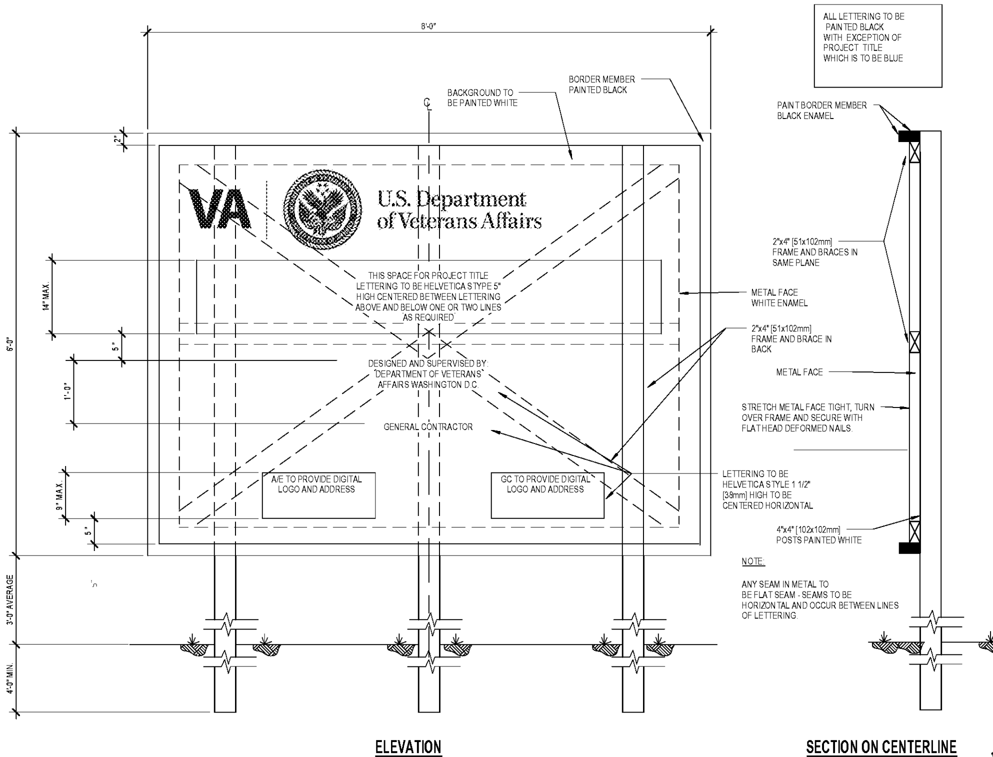

ELEVATION

SECTION ON CENTERLINE

2/AS001 CONSTRUCTION SIGN
SCALE: 1" = 1'-0"

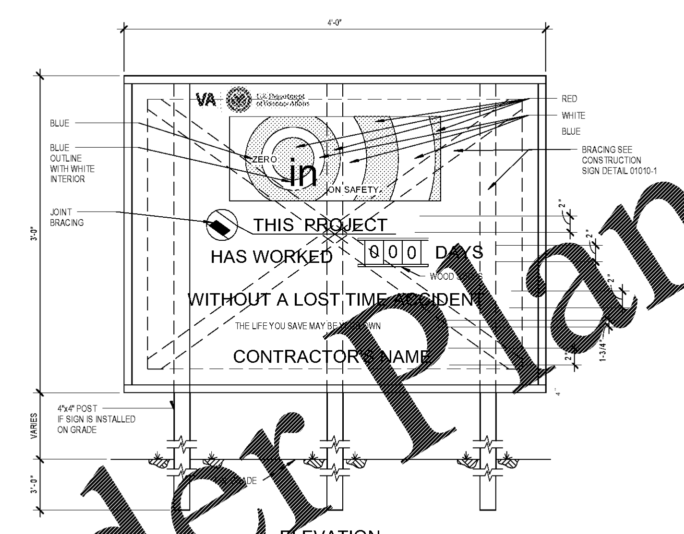

ELEVATION

1/AS001 SAFETY SIGN
SCALE: 1 1/2" = 1'-0"

PROJECT GENERAL NOTES

1. ATTENTION ALL USERS OF THESE DRAWINGS, GENERAL CONTRACTORS, SUB CONTRACTORS, MANUFACTURERS, SUPPLIERS: CAREFULLY AND THOROUGHLY REVIEW THESE GENERAL NOTES. IT IS YOUR RESPONSIBILITY TO KNOW AND ADHERE TO THESE REQUIREMENTS.
2. DO NOT PRESUME THAT YOUR SCOPE OF WORK IS SINGULARLY DEFINED. YOUR SCOPE OF WORK IS DEFINED THROUGHOUT THE ENTIRE SET OF DRAWINGS AND SPECIFICATIONS AND IS NOT CONTAINED IN JUST ONE SERIES OF DRAWINGS OR DIVISION OF SPECIFICATIONS. YOU MUST REVIEW THE ENTIRE SET OF CONTRACT DOCUMENTS TO DETERMINE YOUR SCOPE OF WORK.
3. EVERY EFFORT HAS BEEN MADE TO MAKE THESE DOCUMENTS CONCISE AND COORDINATED, TO DEFINE WORK IN THE MOST LOGICAL PLACE AND TO ELIMINATE REDUNDANCY. KEEP IN MIND HOWEVER THAT YOUR SCOPE OF WORK CAN BE CONTAINED IN VARIOUS PLACES, WITH VARYING DESCRIPTIONS. DO NOT CONSIDER THAT THERE IS ONE CUSTOMARY PLACE TO LOCATE YOUR WORK. THERE IS A DANGER OF OMITTING WORK FROM YOUR SCOPE BECAUSE THE ENTIRE SET OF DOCUMENTS WAS NOT REVIEWED.
4. MECHANICAL AND ELECTRICAL DRAWINGS SHOW INFORMATION IN A DIAGRAMMATIC FASHION WITHOUT DIMENSIONING. THE GENERAL CONTRACTOR IS TO COORDINATE THE LOCATIONS OF ALL MECHANICAL AND ELECTRICAL EQUIPMENT WITH RESPECT TO THE ARCHITECTURAL AND STRUCTURAL DETAILING OF SHAFTS, CHASES, AND SUCH.
5. THE CONTRACTOR SHALL VISIT THE SITE AND BECOME FAMILIAR WITH SITE CONDITIONS AS THEY MAY AFFECT CARRYING OUT THE WORK AS DESCRIBED IN THESE CONTRACT DOCUMENTS. THE CONTRACTOR SHALL INVESTIGATE, VERIFY, AND BE RESPONSIBLE FOR ALL CONDITIONS OF THE PROJECT, AND NOTIFY THE ARCHITECT OF ANY CONDITIONS THAT REQUIRE MODIFICATION BEFORE PROCEEDING WITH THE WORK.
6. THE CONTRACTOR SHALL PROVIDE ALL MATERIALS, EQUIPMENT, LABOR, AND SERVICES NECESSARY TO COMPLETE THE WORK.
7. ALL PERSONS DIRECTLY OR INDIRECTLY ASSOCIATED WITH THE PROJECT SHALL BE FAMILIAR WITH THE RULES AND REGULATIONS OF THE OCCUPATIONAL SAFETY AND HEALTH ACT, AND IMPLEMENT THOSE RULES AS THEY APPLY TO THIS PROJECT.
8. ALL WORK PERFORMED SHALL BE IN ACCORDANCE WITH THE BUILDING CODES AS NOTED ON CODE SHEETS.
9. CONTRACTOR SHALL SUBMIT CONFORMATION OF ORDERED MATERIALS OR ITEMS NECESSARY TO COMPLETE THE PROJECT WITH PROJECTED DELIVERY DATE GREATER THAN FOUR WEEKS.
10. ALL SUBCONTRACTORS SHALL SUBMIT SHOP DRAWINGS AS REQUIRED FOR APPROVAL PRIOR TO COMMENCING ANY WORK.
11. THE GENERAL CONTRACTOR SHALL BE RESPONSIBLE FOR THE COORDINATION OF ALL TRADES AND THE PREVENTION OF CONFLICT AMONG ALL TRADES.
12. THE GENERAL CONTRACTOR SHALL BE RESPONSIBLE FOR LOCATING AND PROTECTING ALL UTILITY LINES. LOCATIONS SHOWN ARE APPROXIMATE. REPAIR ALL DAMAGE TO UTILITY LINES CAUSED BY CONSTRUCTION OPERATIONS AT NO COST TO THE OWNER.
13. PROVIDE SEALANT AT ALL JOINTS OR CRACKS THAT OCCUR WHERE DISSIMILAR MATERIALS INTERSECT PERPENDICULAR TO EACH OTHER, AND THE INTERSECTION IS EXPOSED TO VIEW, UNLESS INDICATED OTHERWISE ON THE DRAWINGS.
14. ALL PENETRATIONS AT SMOKE AND FIRE RATED WALLS, FLOORS, OR CEILINGS, SHALL BE PROTECTED, SEALED OR DAMPERED USING ONLY U.L. AND/OR I.C.B.O. APPROVED METHODS, MATERIALS AND INSTALLATION.
15. CONTRACTOR SHALL TAKE CARE TO MAINTAIN EXISTING FIRE PROTECTION SYSTEMS. REPLACE FIRE-PROOFING AND SEALANTS TO ORIGINAL STATE WHERE DISTURBED BY CONSTRUCTION AND WHERE CONNECTIONS OF NEW CONSTRUCTION MUST INTERFACE WITH EXISTING PROTECTED STRUCTURAL MEMBERS OR BUILDING COMPONENTS.
16. PAINT ALL EXPOSED STEEL UNLESS NOTED OTHERWISE.
17. CONTRACTOR SHALL BE RESPONSIBLE FOR ALL TEMPORARY BRACING AND SHORING REQUIRED DURING CONSTRUCTION.
18. ALL WORK AND MATERIAL SHALL BE REGARDED AS NEW UNLESS SPECIFICALLY INDICATED AS "EXISTING" OR "(E)" ON THE DRAWINGS AND DESCRIBED WITHIN THE SPECIFICATIONS.
19. TYPICAL DETAILS MAY NOT NECESSARILY BE REFERENCED ON THE DRAWINGS, BUT APPLY UNLESS NOTED OTHERWISE.
20. SECURITY AND SAFETY ARE THE CONTRACTOR'S RESPONSIBILITY. COORDINATE WITH CONTRACTING OFFICER'S REPRESENTATIVE.

DRAWINGS AND DIMENSIONS

1. THE CONTRACT DOCUMENT DRAWINGS HAVE BEEN PREPARED USING REVIT® SOFTWARE IN A MICROSOFT WINDOWS ENVIRONMENT. A BUILDING INFORMATION MODEL (BIM) WAS DEVELOPED SOLELY TO COMMUNICATE THE DESIGN TO THE OWNER AND IS NOT SUITABLE FOR ANY OTHER PURPOSE. FOR EXAMPLE THE REVIT MODEL IS NOT SUITABLE FOR COST ESTIMATING, SYSTEMS PERFORMANCE, COORDINATION, SCHEDULING, OR FACILITIES MANAGEMENT.
2. THESE DOCUMENTS WERE PRODUCED USING THE CONSTRUCTION SPECIFICATIONS INSTITUTE'S UNIFORM DRAWING SYSTEM AND THE NATIONAL CAD STANDARD AS GUIDES.
3. ANY INDICATION OF PROJECT LIMITS OR LINES OF DEMARCATION ARE SHOWN FOR THE CONVENIENCE OF THE CONTRACTOR, AND ARE NOT TO BE TAKEN LITERALLY. ACTUAL CONTRACT LIMITS ARE TO BE DETERMINED BY THE CONTRACTOR AND APPROVED BY THE OWNER BEFORE ACTUAL CONSTRUCTION WORK BEGINS.
4. DRAWINGS ARE PREPARED USING DIMENSIONS AND PRODUCT CONFIGURATIONS OR DETAILS OF SPECIFIC MANUFACTURERS. DIMENSIONS AND DETAILS FOR SPECIFIC PRODUCTS MAY CHANGE BEFORE THEY ARE ACTUALLY INCORPORATED INTO THE WORK, AND PRODUCTS BY OTHER MANUFACTURERS ARE ALSO ACCEPTABLE. THEREFORE, ACTUAL INSTALLATION DETAILS AND DIMENSIONS MAY DIFFER FROM THOSE SHOWN. CONTRACTOR SHALL VERIFY INSTALLATION REQUIREMENTS FOR ALL PRODUCTS TO BE INCORPORATED IN THE WORK (INCLUDING THICKNESSES FOR RECESSED OR SEMI-RECESSED PRODUCTS), AND IS RESPONSIBLE FOR ACCOMMODATING AND COORDINATING CHANGES TO OTHER MATERIALS OR PRODUCTS THAT ARE NECESSARY BECAUSE OF THESE DIFFERENCES.
5. THE DRAWINGS AND SPECIFICATIONS ARE SEPARATED INTO DISCIPLINES FOR CONVENIENCE. THE SEPARATIONS USED ARE USED ONLY FOR THE PURPOSES OF CONVENIENCE AND REFERENCE AND IN NO WAY DO THEY DEFINE OR LIMIT THE SCOPE OR INTENT OF ANY PART OF THE DRAWINGS, OR OF THE DRAWINGS AND SPECIFICATIONS AS A WHOLE. THE FACT THAT THE DRAWINGS ARE SEPARATED IN NO WAY SUGGESTS THAT THE WORK IS NOT TO BE CONSTRUCTED AS A COMPLETE, INTEGRATED AND UNIFIED WHOLE.
6. THE DRAWINGS AND SPECIFICATIONS, INCLUDING DRAWINGS PREPARED BY SPECIFIC ENGINEERING DISCIPLINES (SUCH AS CIVIL, STRUCTURAL, MECHANICAL, ELECTRICAL, ETC.) ARE COMPLEMENTARY; ITEMS SHOWN IN ANY ONE LOCATION IN THE DRAWINGS SHALL BE CONSIDERED TO BE REQUIREMENTS OF THE CONTRACT FOR CONSTRUCTION. IN THE EVENT OF AN INCONSISTENCY BETWEEN THE DRAWINGS AND SPECIFICATIONS, OR WITHIN EITHER DOCUMENT, THE CONTRACTOR SHALL SEEK CLARIFICATION OR INTERPRETATION FROM THE ARCHITECT PRIOR TO BIDDING. WHERE INCONSISTENCIES ARE NOT CLARIFIED PRIOR TO BIDDING, AND WHERE THE ACTUAL SOLUTION OR INTENT CANNOT BE REASONABLY INFERRED, THE CONTRACTOR SHALL PROVIDE THE BETTER QUALITY OR GREATER QUANTITY OF WORK.
7. USE OF THE WORD "VERIFY" POINTS OUT A SITUATION WHICH MUST BE CONFIRMED PRIOR TO PROCEEDING WITH THE WORK, FABRICATION OF EQUIPMENT, OR ORDERING MATERIAL. NOTIFY THE ARCHITECT OF ANY DISCREPANCY DISCOVERED.
8. THE GENERAL CONTRACTOR SHALL BE RESPONSIBLE FOR NOTIFYING THE ARCHITECT IMMEDIATELY SHOULD ANY DISCREPANCIES BE FOUND IN THE DRAWINGS AND SPECIFICATIONS.
9. THE GENERAL CONTRACTOR IS RESPONSIBLE FOR CHECKING ALL FIELD CONDITIONS AND DIMENSIONS AS THEY RELATE TO THIS PROJECT. SHOULD DISCREPANCIES EXIST BETWEEN THE WORK INDICATED AND ACTUAL FIELD CONDITIONS NOTIFY THE ARCHITECT PRIOR TO PROCEEDING WITH THE WORK.
10. DO NOT SCALE THE DRAWINGS. DRAWING SCALES AS INDICATED ARE FOR REFERENCE ONLY AND ARE NOT INTENDED TO ACCURATELY DEPICT ACTUAL OR DESIGNATED CONDITIONS. WRITTEN DIMENSIONS SHALL GOVERN.
11. ALL DIMENSIONS INDICATED ARE TO FACES OF STRUCTURAL MATERIALS OR COLUMN GRID LINES UNLESS NOTED OTHERWISE. FINISH OPENINGS SHALL ALLOW FOR SHIM SPACE.
12. THE TERM "ALIGN" REFERS TO LOCATING DIFFERENT COMPONENTS OF CONSTRUCTION TO PROVIDE A FLUSH FINISH SURFACE.
13. SHOULD DIMENSIONS BE MISSING OR CONFLICTING, NOTIFY ARCHITECT PRIOR TO PROCEEDING WITH RELATED WORK.

ARCHITECTURAL ABBREVIATIONS

A/C	AIR CONDITIONING	FT	FOOT / FEET	PTD	PAPER TOWEL DISPENSER
ACOUS	ACOUSTICAL	FTG	FOOTING	PTL	PORCELAIN TILE
ACT	ACOUSTICAL CEILING TILE	FURR	FURRING	PVC	POLYVINYL CHLORIDE
AD	AREA DRAIN	FV	FIELD VERIFY		
ADA	AMERICANS WITH DISABILITIES ACT	FVC	FIRE VALVE CABINET	QA	QUALITY ASSURANCE
A&E	ARCHITECT AND ENGINEERS	FWC	FABRIC WALLCOVERING	QT	QUARRY TILE
AFF	ABOVE FINISH FLOOR				
AFG	ABOVE FINISHED GRADE	GA	GAUGE	R	R-VALUE (INSULATION), RADIUS, RISER
AHJ	AUTHORITIES HAVING JURISDICTION	GALV	GALVANIZED		
AHU	AIR HANDLING UNIT	GB	GRAB BAR	RB	RESILIENT BASE
ALT	ALTERNATIVE	GC	GENERAL CONTRACTOR	RCP	REFLECTED CEILING PLAN
ALT TRANS	ALTERNATIVE TRANSPORTATION	GD	GARBAGE DISPOSAL	RD	ROOF DRAIN
ALUM	ALUMINUM	GF CMU	GROUND FACE CMU	RE:	REFERENCE
ANOD	ANODIZED	GFCI	GROUND FAULT CIRCUIT INTERRUPTER	REBAR	REINFORCING BAR
APPROX	APPROXIMATE	GI	GALVANIZED IRON	REC	RECESSED
ARCH	ARCHITECTURAL	GL	GLASS	RECPT	RECEPTACLE
AVG	AVERAGE	GL BLK	GLASS BLACK	REF	REFRIGERATOR
		GLU LAM	GLUE LAMINATED WOOD	REG	REGISTER
BB	BULLETIN BOARD	GND	GROUND	REINF	REINFORCE
BD	BOARD	GT	GROUT	REQD	REQUIRED
BG	BUMPER GUARD	GYP BD	GYPSUM BOARD	RES	RESILIENT
BLDG	BUILDING			REV	REVISION
BLKG	BLOCKING	HAZMAT	HAZARDOUS MATERIALS	RH	ROOF HATCH
BM	BEAM	HB	HOSE BIB	RM	ROOM
BO	BOTTOM OF	HC	HOLLOW CORE	RO	ROUGH OPENING
BRG	BEARING	HCP	HANDICAPPED	RT	RUBBER STAIR TREAD
		HDR	HEADER		
CB	CATCH BASIN	HDW	HARDWARE	S	SOUTH
CBB	CEMENTITIOUS BACKER BOARD	HDWD	HARDWOOD	SAF	SEAMLESS ACRYLIC FLOORING
CER	CERAMIC	HGT	HEIGHT	SAP	SUSPENDED ACOUSTICAL PANELS
CF	CUBIC FEET	HM	HOLLOW METAL	SAT	SUSPENDED ACOUSTICAL TILE
CFCI	CONTRACTOR FURNISH CONTRACTOR INSTALL	HORIZ	HORIZONTAL	SB	SPLASHBLOCK
CFM	CUBIC FEET PER MINUTE	HR	HOUR, HANDRAIL	SC	SEALED CONCRETE, SOLID CORE
CG	CORNER GUARD, CEILING GRILLE	HT	HEIGHT	SCHED	SCHEDULE
C & G	CURB & GUTTER	HVAC	HEATING, VENTILATING & AIR CONDITIONING	SCP	SCUPPER
CI	CAST IRON			SD	SOAP DISPENSER
CIP	CAST IN PLACE	IBC	INTERNATIONAL BUILDING CODE	SEAL	SEALER
CJ	CONTROL JOINT	ID	INSIDE DIAMETER	SECT	SECTION
CL	CENTERLINE	IG	INSULATING GLASS	SECT	SECTION
CLG	CEILING	IN	INCH	SF	SQUARE FOOT
CMP	CORRUGATED METAL PIPE	INCAN	INCANDESCENT	SF CMU	SPLIT-FACE CMU
CMU	CONCRETE MASONRY UNITS	INFO	INFORMATION	SHR	SHOWER
CO	CLEANOUT	INSUL	INSULATION	SHT	SHEET
COL	COLUMN	INT	INTERIOR	SHTG	SHEATHING
CONC	CONCRETE	INV	INVERT	SIM	SIMILAR
CONT	CONTINUOUS	ITG	INSULATED TEMPERED GLASS	SL	SLOPE
COORD	COORDINATE			SLV	SHORT LEG VERTICAL
CP	CONCRETE PIPE	JAN	JANITOR	SND	SANITARY NAPKIN DISPOSER
CPT	CARPET	J-BOX	JUNCTION BOX	SNV	SANITARY NAPKIN VENDOR
CRS	COLD ROLLED STEEL	JT	JOINT	SPECS	SPECIFICATIONS
CS	CAST STONE			SQ	SQUARE
CSB	CONCRETE SPLASH BLOCK	L	LONG	SS	STAINLESS STEEL
CSI	CONSTRUCTION SPECIFICATIONS INSTITUTE	LAV	LAVATORY	STC	SOUND TRANSMISSION CLASS
CT	CERAMIC TILE	LB(S) #	POUND(S)	STD	STANDARD
CTR	CENTER	LF	LINEAL FEET	STL	STEEL
CU FT	CUBIC FEET	LLV	LONG LEG VERTICAL	STOR	STORAGE
CUH	CABINET UNIT HEATER	LT	LIGHT	STRUC	STRUCTURAL
CY	CUBIC YARD	LVR	LOUVER	SUSP	SUSPENDED
				SV	SHEET VINYL
D	DRYER	M & BH	MOP AND BROOM HOLDER	SYM	SYMMETRICAL
DEG	DEGREE	MAINT	MAINTENANCE	SYS	SYSTEM
DEMO	DEMOLITION	MATL	MATERIAL		
DEPT	DEPARTMENT	MAX	MAXIMUM	T	TREAD
DET	DETAIL	MB	MARKER BOARD	TB	TACKBOARD
DF	DRINKING FOUNTAIN	MECH	MECHANICAL	T&B	TOP AND BOTTOM
DIA	DIAMETER	MEPF	MECHANICAL, ELECTRICAL, PLUMBING, FIRE PROTECTION (CONDUIT)	T&G	TONGUE AND GROOVE
DIAG	DIAGONAL			TBD	TO BE DETERMINED
DISP	DISPENSER	MFR	MANUFACTURER	TD	TUBULAR DAYLIGHTING DEVICE
DIV	DIVISION	MH	MANHOLE	TEL	TELEPHONE
DN	DOWN	MIN	MINIMUM	TEMP	TEMPERATURE
DR	DOOR	MIRR	MIRROR	TG	TEMPERED GLASS, TONGUE & GROOVE, TRANSFER GRILLE
DS	DOWNSPOUT	MISC	MISCELLANEOUS		
DW	DISHWASHER	MO	MASONRY OPENING		
DWG	DRAWING	MSB	MOP SERVICE BASIN	THRU	THROUGH
		MTD	MOUNTED	TO	TOP OF
E	EAST	MTL	METAL	TOC	TOP OF CONCRETE
(E)	EXISTING			TOM	TOP OF MASONRY
EA	EACH	N	NORTH	TOS	TOP OF STEEL
EF	EXHAUST FAN	NA	NOT APPLICABLE	TOW	TOP OF WALL
EIFS	EXTERIOR INSULATION AND FINISH SYSTEM	NECY	NECESSARY	TTD	TOILET TISSUE DISPENSER
EJ	EXPANSION JOINT	NIC	NOT IN CONTRACT	TV	TELEVISION
EL	ELEVATION	NO	NUMBER	TYP	TYPICAL
ELEC	ELECTRICAL	NOM	NOMINAL		
ELEV	ELEVATOR	NTS	NOT TO SCALE	UGND	UNDERGROUND
EQ	EQUAL			UL	UNDERWRITERS LABORATORY
EQUIP	EQUIPMENT	OC	ON CENTER	UNFIN	UNFINISHED
EST	ESTIMATED	OD	OUTSIDE DIAMETER, OVERFLOW DRAIN	UNO	UNLESS NOTED OTHERWISE
ETS	EXPOSED TO STRUCTURE			URN	URINAL
EWC	ELECTRIC WATER COOLER	OFCI	OWNER FURNISHED CONTRACTOR INSTALLED		
EXH	EXHAUST			VB	VINYL BASE
EXIST	EXISTING	OFOI	OWNER FURNISHED OWNER INSTALLED	VCT	VINYL COMPOSITION TILE
EXP	EXPANSION			VERT	VERTICAL
EXT	EXTERIOR	OH	OPPOSITE HAND	VIF	VERIFY IN FIELD
		OPN	OPENING	VTR	VENT THROUGH ROOF
FA	FIRE ALARM	OPP	OPPOSITE	VWC	VINYL WALL COVERING
FAAP	FIRE ALARM ANNUNCIATOR PANEL	ORD	OVERFLOW ROOF DRAIN		
FACP	FIRE ALARM CONTROL PANEL			W	WEST
FCU	FAN COIL UNIT	P	PLASTIC	W/	WITH
FD	FLOOR DRAIN	PARTN	PARTITION	W/O	WITHOUT
FDN	FOUNDATION	PBD	PARTICLE BOARD	WC	WATER CLOSET
FE	FIRE EXTINGUISHER	PCC	PRECAST CONCRETE	WD	WOOD
FEC	FIRE EXTINGUISHER CABINET	PL	PLATE	WDP	WOOD PANELING
FF	FINISH FLOOR	PLAM	PLASTIC LAMINATE	WDW	WINDOW
FF & E	FURNITURE FIXTURES & EQUIPMENT	PLAS	PLASTER	WF	WIDE FLANGE
FIN	FINISH	PLYWD	PLYWOOD	WGL	WIRED GLASS
FIXT	FIXTURE	PR	PAIR	WH	WATER HEATER
FL	FLOW LINE	PRCST	PRECAST	WR	WASTE RECEPTACLE, WATER RESISTANT
FLR	FLOOR	PREFAB	PREFABRICATED		
FLUOR	FLUORESCENT	PROP	PROPERTY	WS	WATER STOP
FO	FINISH OPENING	PSF	POUNDS PER SQUARE FOOT	WSCT	WAINSCOTT
FOS	FACE OF STUD	PSI	POUNDS PER SQUARE INCH	WT	WEIGHT
FR	FIRE RATED	PT	PAINT	WWF	WELDED WIRE FABRIC
FSP	FIRE STANDPIPE	PT CONC	POST-TENSIONED CONCRETE		

3/AS001 - WALL TYPE LEGEND

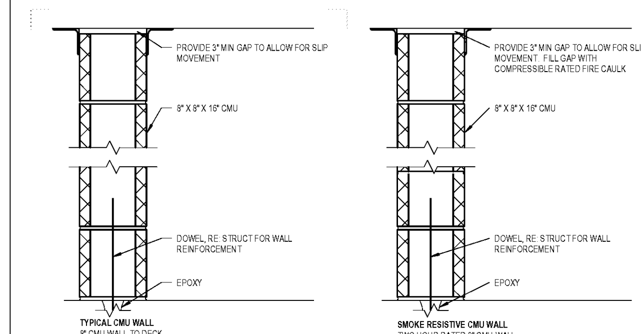

ARCHITECTURAL SYMBOLS

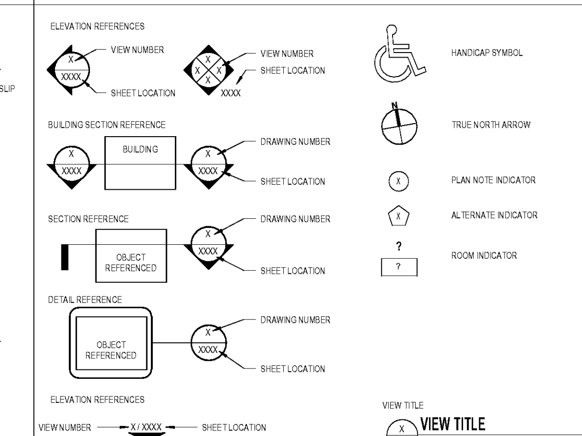

Revisions:	Date

VA U.S. Department of Veterans Affairs
MEMPHIS VAMC
1030 JEFFERSON AVE, MEMPHIS, TN 38104

ARCHITECT/ENGINEERS:

PROJECT LEAD
Architect, Structural Engineer, Civil Engineer
GUIDON DESIGN
905 N. CAPITOL AVE. SUITE 100 INDIANAPOLIS, IN. 46204
317.800.6388 WWW.GUIDONDESIGN.COM
SUSTAINABLE ARCHITECTURE + ENGINEERING

MEP Engineer
APOGEE CONSULTING GROUP
1151 Kildaire Farm Rd. Suite 120
Cary, NC 27511
Tele: 919-858-7420

Functional Design
CARL WALKER INC.
3211 Internet Blvd., Suite 220
Frisco, TX 75034
Tele: 469-777-5143

BID SET

Drawing Title: ARCHITECTURAL SYMBOLS AND ABBREVIATIONS	Project Title: CONSTRUCT PARKING GARAGE ON WEST LOT	Project Number: 15.1067 / Building Number:	OFFICE OF FACILITIES MANAGEMENT
Approved for Design Concept: FACILITY MANAGEMENT DIVISION MANAGER	Location: MEMPHIS, TN / Date: 11/14/2016 / Checked By: UJ / Drawn By: KH	Drawing Number: AS001	VA Project Number: 614-319

C:\Users\khawkins\Documents\15.1067_Memphis VAGarage_khawkins.rvt

Order Plans @ WWW.LDILine.com