PERIMETER STONE MUST ALWAYS BE BROUGHT UP EVENLY WITH BACKFILL OF BED. PERIMETER STONE MUST EXTEND HORIZONTALLY TO THE EXCAVATION WALL FOR BOTH STRAIGHT OR SLOPED SIDEWALLS.

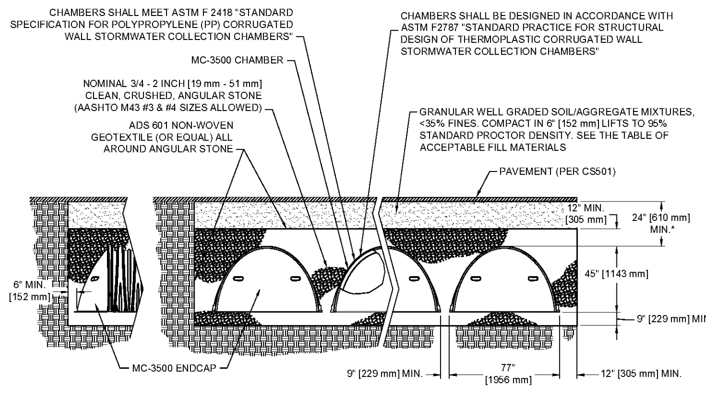

THE INSTALLED CHAMBER SYSTEM SHALL PROVIDE THE LOAD FACTORS SPECIFIED IN THE AASHTO LRFD BRIDGE DESIGN SPECIFICATIONS SECTION 12.12 FOR EARTH AND LIVE LOADS, WITH CONSIDERATION FOR IMPACT AND MULTIPLE VEHICLE PRESENCES.

ADS | THE DESIGN ENGINEER SHALL REVIEW THIS DRAWING PRIOR TO CONSTRUCTION. IT IS THE ULTIMATE RESPONSIBILITY OF THE DESIGN ENGINEER TO ENSURE THAT THE PRODUCT(S) DEPICTED AND ALL ASSOCIATED DETAILS MEET ALL APPLICABLE LAWS, REGULATIONS, AND PROJECT REQUIREMENTS. | StormTech Subsurface Stormwater Management, 70 INWOOD ROAD, SUITE 3 | ROCKY HILL, CT 06067, PHONE: 888-892-2694 | FAX: 866-328-8401, WWW.STORMTECH.COM | SCALE: DATE: DRAWN BY: CHECKED:

UNDERGROUND DETENTION CHAMBER

NTS

NOTE: ADS STORMTECH CHAMBERS SHOWN AS BASIS OF DESIGN. CONTRACTOR MAY SUBMIT ALTERNATE MANUFACTURER'S CHAMBERS FOR APPROVAL.

NOTES:
1. INSPECTION PORTS MAY BE CONNECTED THROUGH ANY OF (6) CHAMBER CORRUGATION VALLEYS
2. ALL SCHEDULE 40 FITTINGS TO BE SOLVENT CEMENTED.

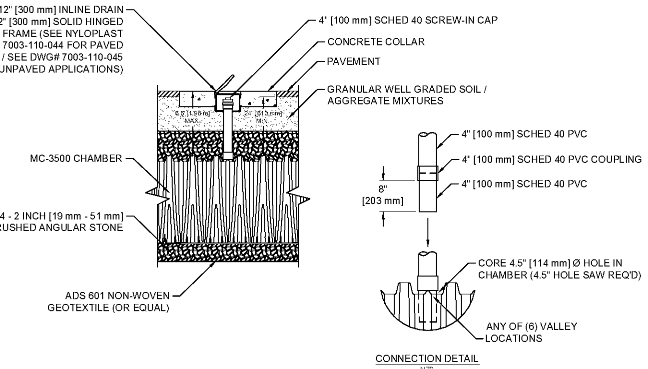

ADS | THE DESIGN ENGINEER SHALL REVIEW THIS DRAWING PRIOR TO CONSTRUCTION. IT IS THE ULTIMATE RESPONSIBILITY OF THE DESIGN ENGINEER TO ENSURE THAT THE PRODUCT(S) DEPICTED AND ALL ASSOCIATED DETAILS MEET ALL APPLICABLE LAWS, REGULATIONS, AND PROJECT REQUIREMENTS. | StormTech | SCALE: DATE: DRAWN BY: CHECKED:

UNDERGROUND DETENTION CHAMBER

NTS

ACCEPTABLE FILL MATERIALS: STORMTECH MC-3500 CHAMBER SYSTEMS

MATERIAL LOCATION	DESCRIPTION	AASHTO M43 DESIGNATION[1]	COMPACTION/DENSITY REQUIREMENT
(D) FILL MATERIAL FOR LAYER 'D' STARTS FROM THE TOP OF THE 'C' LAYER TO THE BOTTOM OF FLEXIBLE PAVEMENT OR UNPAVED FINISHED GRADE ABOVE. NOTE THAT PAVEMENT SUBBASE MAY BE PART OF THE 'D' LAYER.	ANY SOIL/ROCK MATERIALS, NATIVE SOILS, OR PER ENGINEER'S PLANS. CHECK PLANS FOR PAVEMENT SUBGRADE REQUIREMENTS.	N/A	PREPARE PER ENGINEER'S PLANS. PAVED INSTALLATIONS MAY HAVE STRINGENT MATERIAL AND PREPARATION REQUIREMENTS.
(C) FILL MATERIAL FOR LAYER 'C' STARTS FROM THE TOP OF THE EMBEDMENT STONE ('B' LAYER) TO 24" [610 mm] ABOVE THE TOP OF THE CHAMBER. NOTE THAT PAVEMENT SUBBASE MAY BE A PART OF THIS LAYER.	GRANULAR WELL-GRADED SOIL/AGGREGATE MIXTURES, <35% FINES. MOST PAVEMENT SUBBASE MATERIALS CAN BE USED IN LIEU OF THIS LAYER.	3, 357, 4, 467, 5, 56, 57, 6, 67, 68, 7, 78, 8, 89, 9, 10	BEGIN COMPACTION AFTER 24" [610 mm] OF MATERIAL OVER THE CHAMBERS IS REACHED. COMPACT ADDITIONAL LAYERS IN 12" [305 mm] MAX LIFTS TO A MIN. 95% STANDARD PROCTOR DENSITY.
(B) EMBEDMENT STONE SURROUNDING THE CHAMBERS FROM THE FOUNDATION STONE TO THE 'C' LAYER ABOVE.	CLEAN, CRUSHED, ANGULAR STONE, NOMINAL SIZE DISTRIBUTION BETWEEN 3/4 - 2 INCH [19 - 51 mm]	3, 4	NO COMPACTION REQUIRED.
(A) FOUNDATION STONE BELOW CHAMBERS FROM THE SUBGRADE UP TO THE FOOT (BOTTOM) OF THE CHAMBER.	CLEAN, CRUSHED, ANGULAR STONE, NOMINAL SIZE DISTRIBUTION BETWEEN 3/4 - 2 INCH [19 - 51 mm]	3, 4	PLATE COMPACT OR ROLL TO ACHIEVE A FLAT SURFACE. STANDARD PROCTOR DENSITY [2].

PLEASE NOTE:
1. THE LISTED AASHTO DESIGNATIONS ARE FOR GRADATIONS ONLY. THE STONE MUST ALSO BE CLEAN, CRUSHED, ANGULAR. FOR EXAMPLE, A SPECIFICATION FOR #4 STONE WOULD STATE: "CLEAN, CRUSHED, ANGULAR NO. 4 (AASHTO M43) STONE".
2. AS AN ALTERNATE TO PROCTOR TESTING AND FIELD DENSITY MEASUREMENTS ON OPEN GRADED STONE, STORMTECH COMPACTION REQUIREMENTS ARE MET FOR 'A' LOCATION MATERIALS WHEN PLACED AND COMPACTED IN 9" [229 mm] (MAX) LIFTS USING TWO FULL COVERAGES WITH AN APPROPRIATE COMPACTOR.

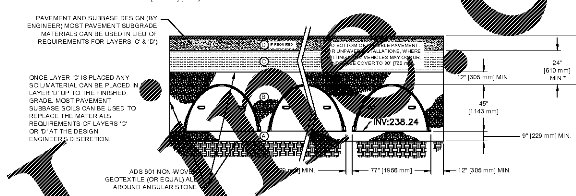

ADS | THE DESIGN ENGINEER SHALL REVIEW THIS DRAWING PRIOR TO CONSTRUCTION. IT IS THE ULTIMATE RESPONSIBILITY OF THE DESIGN ENGINEER TO ENSURE THAT THE PRODUCT(S) DEPICTED AND ALL ASSOCIATED DETAILS MEET ALL APPLICABLE LAWS, REGULATIONS, AND PROJECT REQUIREMENTS. | StormTech | SCALE: DATE: DRAWN BY: CHECKED:

UNDERGROUND DETENTION CHAMBER

NTS

STORMTECH GENERAL NOTES

1. STORMTECH LLC ("STORMTECH") REQUIRES INSTALLING CONTRACTORS TO USE AND UNDERSTAND STORMTECH'S LATEST MC-3500 INSTALLATION INSTRUCTIONS PRIOR TO BEGINNING SYSTEM INSTALLATION.
2. STORMTECH OFFERS INSTALLATION CONSULTATIONS TO INSTALLING CONTRACTORS. CONTACT OUR TECHNICAL SERVICE DEPARTMENT OR LOCAL STORMTECH REPRESENTATIVE AT LEAST 30 DAYS PRIOR TO SYSTEM INSTALLATION TO ARRANGE A PRE-INSTALLATION CONSULTATION. OUR REPRESENTATIVES CAN THEN ANSWER QUESTIONS OR ADDRESS COMMENTS ON THE STORMTECH CHAMBER SYSTEM AND INFORM THE INSTALLING CONTRACTOR OF THE MINIMUM INSTALLATION REQUIREMENTS BEFORE BEGINNING THE SYSTEM'S CONSTRUCTION. CALL **860-529-8188** TO SPEAK TO A TECHNICAL SERVICE REPRESENTATIVE OR VISIT **WWW.STORMTECH.COM** TO RECEIVE A COPY OF OUR INSTALLATION INSTRUCTIONS.
3. STORMTECH REQUIREMENTS FOR SYSTEMS WITH PAVEMENT DESIGN (ASPHALT, CONCRETE PAVERS, ETC.): MINIMUM COVER IS 24" [610 mm] NOT INCLUDING PAVEMENT; MAXIMUM COVER IS 6.5' [1.98 m] INCLUDING PAVEMENT. FOR INSTALLATIONS THAT DO NOT INCLUDE PAVEMENT, WHERE RUTTING FROM VEHICLES MAY OCCUR, MINIMUM REQUIRED COVER IS 30" [762 mm], MAXIMUM COVER IS 6.5' [1.98 m].
4. THE CONTRACTOR MUST REPORT ANY DISCREPANCIES WITH THE BEARING CAPACITY OF THE CHAMBER FOUNDATION MATERIALS TO THE DESIGN ENGINEER.
5. AASHTO M288 CLASS 2 NON-WOVEN GEOTEXTILE (FILTER FABRIC) MUST BE USED AS INDICATED IN THE PROJECT PLANS.
6. STONE PLACEMENT BETWEEN CHAMBERS ROWS AND AROUND PERIMETER MUST FOLLOW INSTRUCTIONS AS INDICATED IN THE MOST CURRENT VERSION OF STORMTECH MC-3500 CONSTRUCTION GUIDE.
7. BACKFILLING OVER THE CHAMBERS MUST FOLLOW REQUIREMENTS AS INDICATED IN THE MOST CURRENT VERSION OF STORMTECH MC-3500 INSTALLATION INSTRUCTIONS.
8. THE CONTRACTOR MUST REFER TO STORMTECH MC-3500 CONSTRUCTION GUIDE FOR A TABLE OF ACCEPTABLE VEHICLE LOADS AT VARIOUS DEPTHS OF COVER. THIS INFORMATION IS ALSO AVAILABLE ON THE STORMTECH WEBSITE: **WWW.STORMTECH.COM**. THE CONTRACTOR IS RESPONSIBLE FOR PREVENTING VEHICLES THAT EXCEED STORMTECH REQUIREMENTS FROM TRAVELING ACROSS OR PARKING OVER THE STORMWATER SYSTEM. TEMPORARY FENCING, WARNING TAPE AND APPROPRIATELY LOCATED SIGNS ARE COMMONLY USED TO PREVENT UNAUTHORIZED VEHICLES FROM ENTERING SENSITIVE CONSTRUCTION AREAS.
9. THE CONTRACTOR MUST APPLY EROSION AND SEDIMENT CONTROL MEASURES TO PROTECT THE STORMWATER SYSTEM DURING ALL PHASES OF SITE CONSTRUCTION PER LOCAL CODES AND DESIGN ENGINEER'S SPECIFICATIONS.
10. **STORMTECH PRODUCT WARRANTY IS LIMITED.** CONTACT STORMTECH FOR WARRANTY INFORMATION.

ADS | THE DESIGN ENGINEER SHALL REVIEW THIS DRAWING PRIOR TO CONSTRUCTION. IT IS THE ULTIMATE RESPONSIBILITY OF THE DESIGN ENGINEER TO ENSURE THAT THE PRODUCT(S) DEPICTED AND ALL ASSOCIATED DETAILS MEET ALL APPLICABLE LAWS, REGULATIONS, AND PROJECT REQUIREMENTS. | StormTech | SCALE: DATE: DRAWN BY: CHECKED:

UNDERGROUND DETENTION CHAMBER

NTS

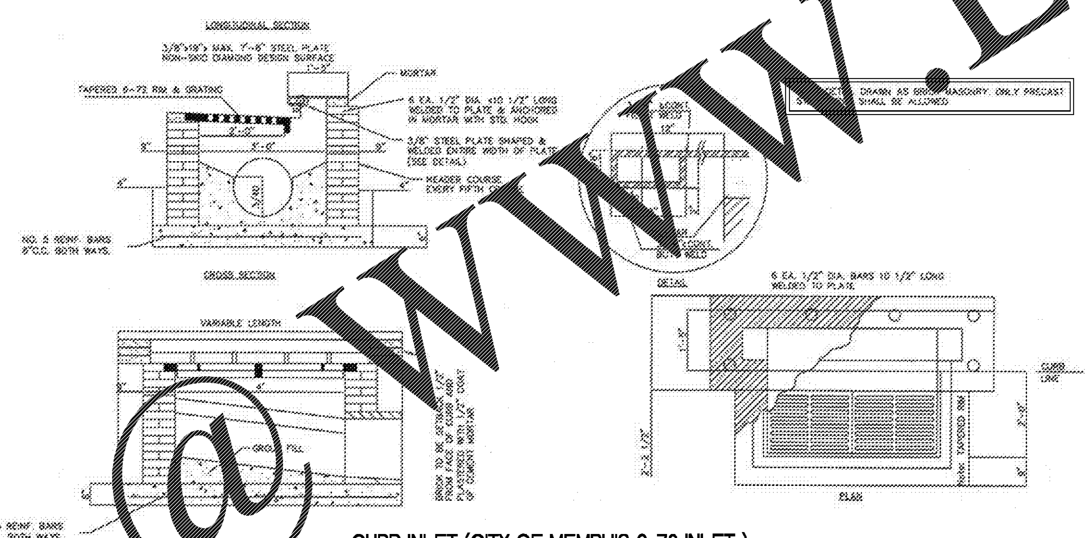

CURB INLET (CITY OF MEMPHIS 6-72 INLET)

NTS

NOTE: ALL INLETS AND MANHOLES SHALL BE REINFORCED CONCRETE, PRECAST OR CAST IN PLACE. PROVIDE SUBMITTAL SHOP DRAWINGS FOR EACH TYPE PRIOR TO STARTING CONSTRUCTION.

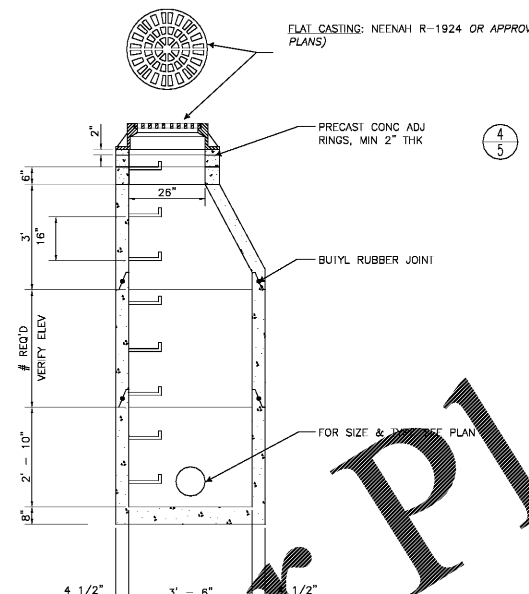

TYPE "C" MANHOLE

NTS

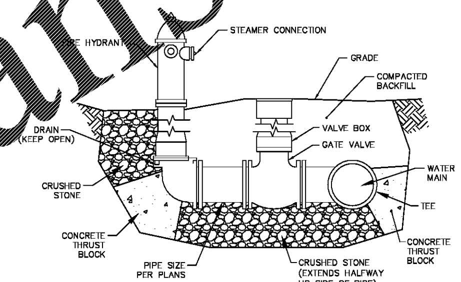

FIRE HYDRANT ASSEMBLY

NTS

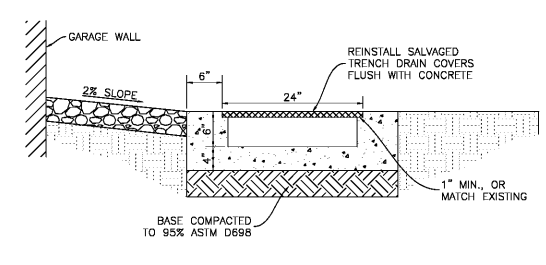

CONCRETE FLUME

NTS

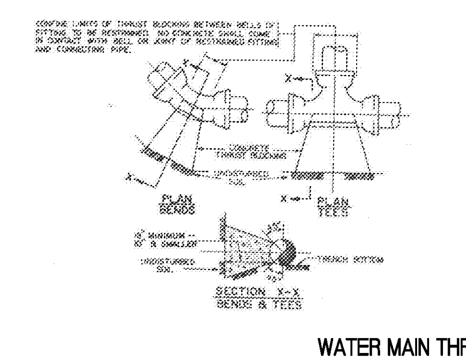

CONCRETE THRUST BLOCKING SCHEDULE IN SQUARE FEET

PIPE SIZE	BENDS 11 1/4°	BENDS 22 1/2°	BENDS 45°	BENDS 90°	STD TEE
4	1.0	1.0	1.5	2.5	2.0
6	1.0	2.0	3.0	5.5	4.0
8	1.5	2.5	5.0	10.0	7.0
10	2.0	4.0	7.5	14.5	10.0
12	3.0	6.0	11.5	21.5	14.5
14	4.0	7.5	15.0	28.0	19.5
16	5.0	10.0	20.0	35.0	25.5
18	6.5	12.5	24.5	35.0*	32.0
20	8.5	16.5	32.5	35.0*	35.0*
24	10.0	20.0	35.0*	35.0*	35.0*
30	18.0	34.5	35.0*	35.0*	35.0*
36	25.0	35.0*	35.0*	35.0*	35.0*
42	32.5	35.0*	35.0*	35.0*	35.0*

BLOCKING SCHEDULE BASED ON 200 PSI WATER PRESSURE, 2,000 PSF SOIL BEARING PRESSURE & 1.25 SAFETY FACTOR.
* INDICATES FITTINGS REQUIRING RESTRAINED JOINTS IN ADDITION TO CONC. THRUST BLOCKING. SEE RESTRAINED JOINT SCHEDULE.

WATER MAIN THRUST BLOCK

NTS

Order Plans @ WWW.LDILine.com

Revisions: | Date

VA U.S. Department of Veterans Affairs
MEMPHIS VAMC
1030 JEFFERSON AVE, MEMPHIS, TN 38104

LUKE J. LEISING REGISTERED ENGINEER AGRICULTURE STATE OF TENNESSEE

ARCHITECT/ENGINEERS:

PROJECT LEAD
Architect, Structural Engineer, Civil Engineer
GUIDON DESIGN
905 N. CAPITOL AVE. SUITE 100 INDIANAPOLIS, IN. 46204
317.800.6388 WWW.GUIDONDESIGN.COM
SUSTAINABLE ARCHITECTURE + ENGINEERING

MEP Engineer
APOGEE CONSULTING GROUP
1151 Kildaire Farm Rd. Suite 120
Cary, NC 27511
Tele: 919-858-7420

Functional Design
CARL WALKER INC.
3211 Internet Blvd., Suite 220
Frisco, TX 75034
Tele: 469-777-5143

BID SET

Drawing Title	Project Title	Project Number	
UTILITY DETAILS	CONSTRUCT PARKING GARAGE ON WEST LOT	15.1067	OFFICE OF FACILITIES MANAGEMENT
Approved for Design Concept: FACILITY MANAGEMENT DIVISION MANAGER	Location: MEMPHIS, TN	Building Number:	VA Project Number: 614-319
	Date: 11/14/2016; Checked By: KJC; Drawn By: CMB	Drawing Number: CU501	VA U.S. Department of Veterans Affairs

C:\Users\edecina\Documents\15.1067_MemphisVAGarage_edecina@guidondesign.com.rvt