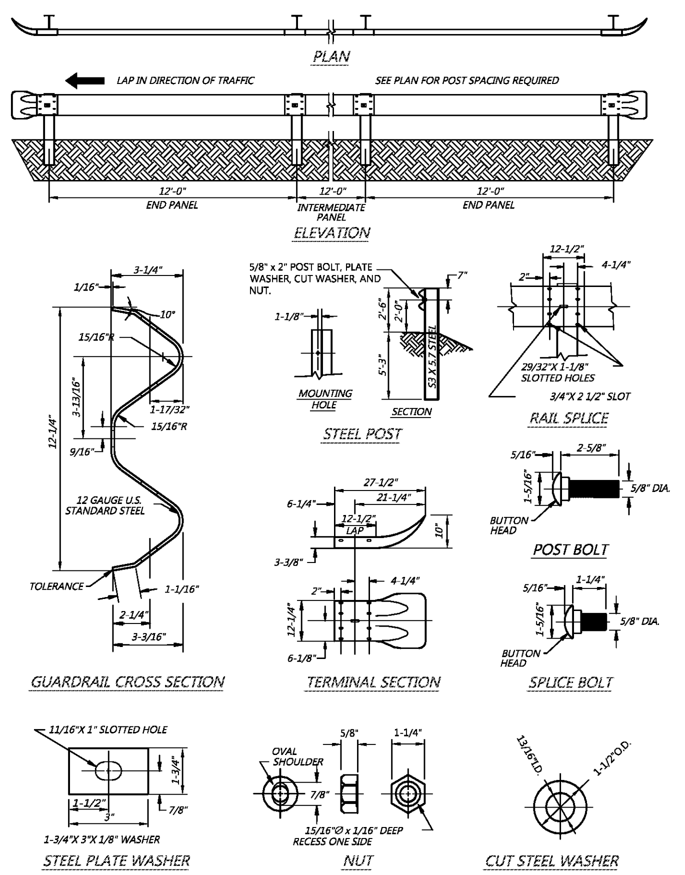

NOTE

ALL GUARD RAIL ELEMENTS, FASTENERS, AND TERMINAL SECTIONS SHALL MEET THE REQUIREMENTS OF AASHTO M 180

GUARD RAIL (WEAK POST)

N.T.S.

S6A

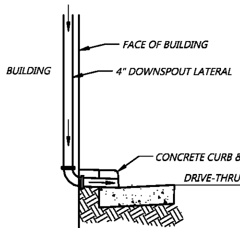

NOTES:

1. PIPE SHALL BE SCHEDULE 40 PVC.
2. ALL CONNECTIONS SHALL BE WATERTIGHT.

DOWNSPOUT LATERAL THROUGH CURB FACE

N.T.S.

G7K

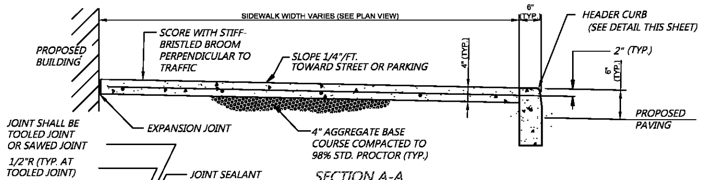

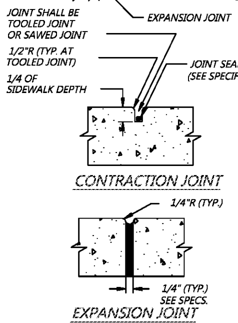

NOTES:

1. WHERE REQUIRED REINFORCEMENT WILL BE No. 3 BARS 24" O.C. EACH WAY (MAX. SPACING), OR 6 X 6 -W1.4 X W1.4 WWF CONCRETE TO BE 4", 3500 P.S.I. P.C. CONCRETE.
2. TOOLED CONTRACTION JOINT IN FRESH CONCRETE TO BE GROOVED JOINT 1/4 OF CONCRETE DEPTH MIN. WITH 1/2" MIN. RADIUS ON EXPOSED EDGES.
3. SAWED CONTRACTION JOINT TO BE 1/4 OF CONCRETE DEPTH MIN. AND FILLED WITH CONTINUOUS LENGTHS OF JOINT SEALANT AS SPECIFIED IN SECTION 02520-2.01 OF THE SPECIFICATIONS.
4. PATHFINDER DETECTABLE WARNING SURFACE AVAILABLE FROM CARSONITE INTERNATIONAL, CARSON CITY, NV (800) 648-7974 3' WIDE - DOT 12"x12"x1/4" OVERLAY, OR EQUAL.

CONCRETE SIDEWALK @ BUILDING

N.T.S.

S3C

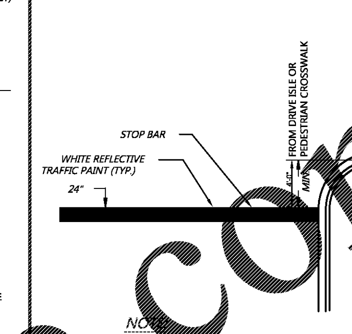

NOTE:

REFER TO SITE WORK SPECIFICATIONS FOR FURTHER INFORMATION.

STOP BAR

N.T.S.

S5AA

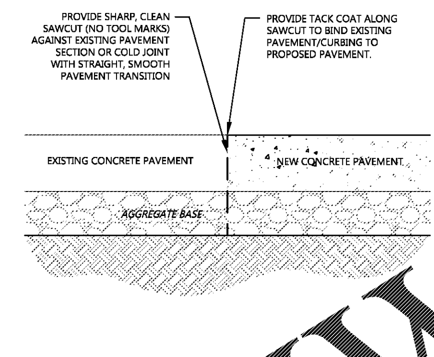

CONCRETE PAVEMENT TRANSITION

N.T.S.

APT

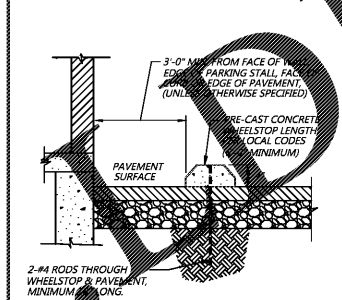

PRE-CAST CONCRETE WHEELSTOP

N.T.S.

S11C

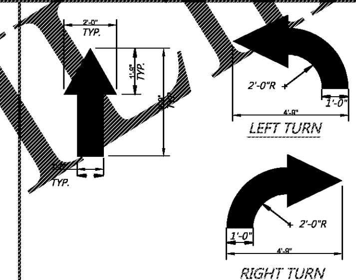

NOTE

1. WORDS AND ARROWS FOR DRIVEWAYS SHALL BE APPLIED ACCORDING TO REQUIREMENTS AS OUTLINED IN THE MANUAL ON UNIFORM TRAFFIC CONTROL DEVICES FOR STREETS AND HIGHWAYS.
2. ALL TRAFFIC FLOW ARROWS TO BE SOLID WHITE REFLECTIVE TRAFFIC PAINT OR MEET LOCAL REQUIREMENTS.

PARKING LOT FLOW ARROW

N.T.S.

S5I

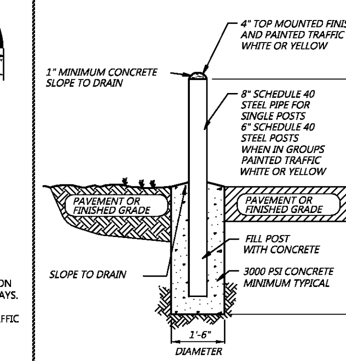

BOLLARD

N.T.S.

S6D

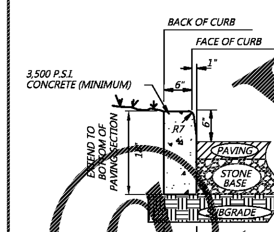

NOTES

1. EXPANSION JOINTS REQUIRED AT ALL STRUCTURES AND CURB RETURNS. 25 FOOT MAXIMUM DISTANCE BETWEEN EXPANSION JOINTS.
2. 3,500 P.S.I. CONCRETE WITH SMOOTH FINISH.
3. COMPACT SUBGRADE TO 95% STANDARD PROCTOR.
4. SEE GEOTECHNICAL REPORT FOR ADDITIONAL INFORMATION.

HEADER CURB AT SIDEWALK

N.T.S.

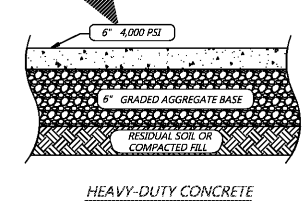

THIS PAVEMENT DETAIL IS BASED ON THE GEOTECHNICAL REPORT FOR KRYSTAL'S RESTAURANT - ATL #034, BY CONTOUR ENGINEERING, DATED FEB 9, 2018. THE CONTRACTOR SHOULD CLARIFY ANY DISCREPANCY BETWEEN THE GEOTECHNICAL REPORT AND THIS DETAIL PRIOR TO BIDDING OR CONSTRUCTING.

HEAVY DUTY CONCRETE SPECIFICATION

N.T.S.

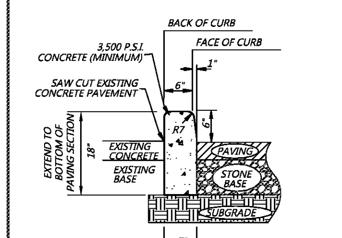

NOTES

1. EXPANSION JOINTS REQUIRED AT ALL STRUCTURES AND CURB RETURNS. 25 FOOT MAXIMUM DISTANCE BETWEEN EXPANSION JOINTS.
2. 3,500 P.S.I. CONCRETE WITH SMOOTH FINISH.
3. COMPACT SUBGRADE TO 95% STANDARD PROCTOR.
4. SEE GEOTECHNICAL REPORT FOR ADDITIONAL INFORMATION.

HEADER CURB AT PERIMETER PARKING

N.T.S.

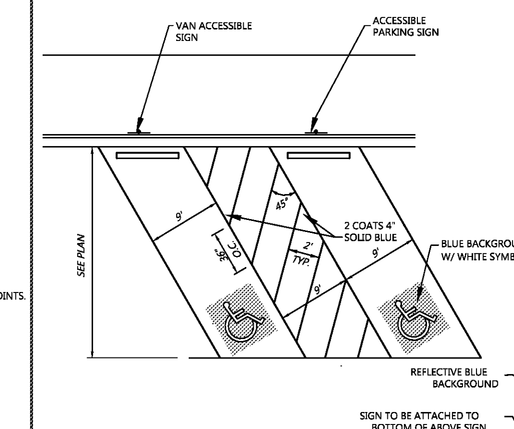

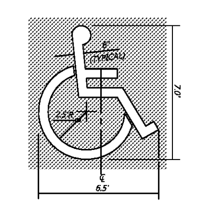

ACCESSIBLE PARKING SYMBOL

LOCATE AT EDGE OF PARKING SPACE UNLESS ACCOMPANIED BY "VAN" LETTERING

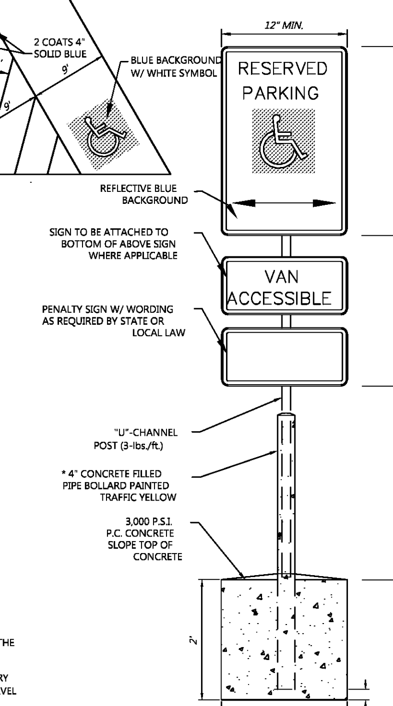

NOTES:

1. SEE SITE PLAN FOR LAYOUT AND LOCATION.
2. ALL DIMENSIONS ARE TO OF STRIPE UNLESS OTHERWISE INDICATED.
3. 2% MAXIMUM SLOPE IN ALL DIRECTIONS WITHIN THE ACCESSIBLE SPACE.
4. * CONCRETE BOLLARD AROUND POST IS NECESSARY WHERE THE SIGN IS TO BE WITHIN 2' OF THE TRAVEL LANE OR PARKING SPACE

ADA PARKING DETAIL

N.T.S.

S5O

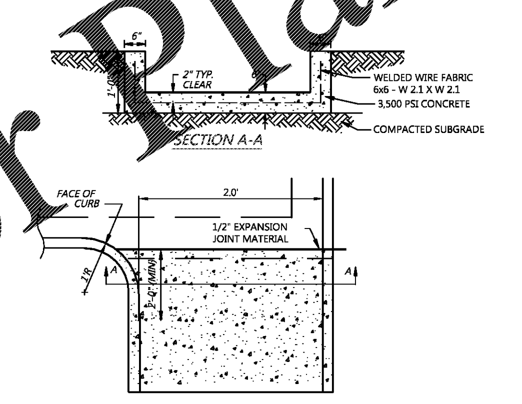

CONCRETE CURB FLUME

N.T.S.

G4A

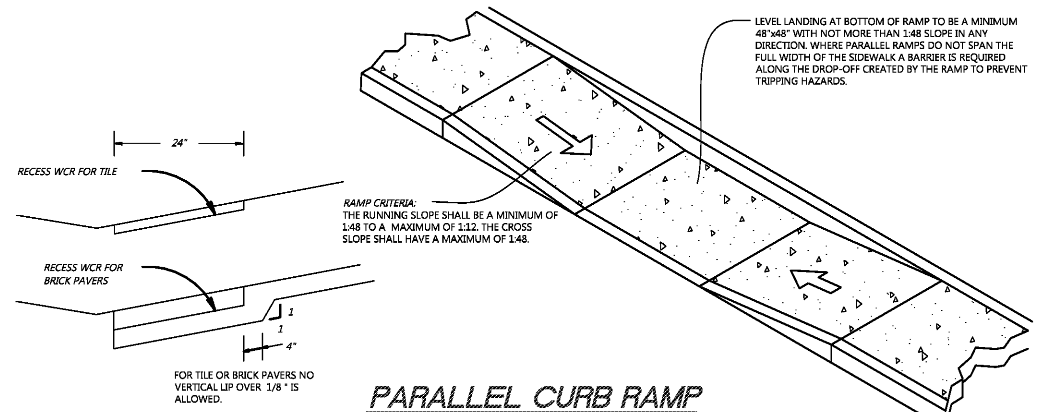

NOTES

LEVEL LANDING AT BOTTOM OF RAMP TO BE A MINIMUM 48"x48" WITH NOT MORE THAN 1:48 SLOPE IN ANY DIRECTION. WHERE PARALLEL RAMPS DO NOT SPAN THE FULL WIDTH OF THE SIDEWALK A BARRIER IS REQUIRED ALONG THE DROP-OFF CREATED BY THE RAMP TO PREVENT TRIPPING HAZARDS.

PARALLEL CURB RAMP IN SIDEWALK

N.T.S.

811

Know what's **below.** **Call** before you dig.

THE LOCATIONS OF EXISTING UNDERGROUND UTILITIES ARE SHOWN IN AN APPROXIMATE WAY ONLY AND HAVE NOT BEEN INDEPENDENTLY VERIFIED BY THE OWNER OR ITS REPRESENTATIVE. THE CONTRACTOR SHALL DETERMINE THE EXACT LOCATION OF ALL EXISTING UTILITIES BEFORE COMMENCING WORK, AND AGREES TO BE FULLY RESPONSIBLE FOR ANY AND ALL DAMAGES WHICH MIGHT BE OCCASIONED BY THE CONTRACTOR'S FAILURE TO EXACTLY LOCATE AND PRESERVE ANY AND ALL UNDERGROUND UTILITIES.

NOTICE:

CONSTRUCTION SITE SAFETY IS THE SOLE RESPONSIBILITY OF THE CONTRACTOR; NEITHER THE OWNER NOR THE ENGINEER SHALL BE EXPECTED TO ASSUME ANY RESPONSIBILITY FOR SAFETY OF THE WORK, OF PERSONS ENGAGED IN THE WORK, OF ANY NEARBY STRUCTURES, OR OF ANY OTHER PERSONS.

COPYRIGHT © 2018 ATWELL LLC NO REPRODUCTION SHALL BE MADE WITHOUT THE PRIOR WRITTEN CONSENT OF ATWELL LLC

24 HOUR EMERGENCY CONTACT
JOHN DAWSON
770-329-6807

ATWELL
866.850.4200 www.atwell-group.com
1800 PARKWAY PLACE, SUITE 700
MARIETTA, GA
770.423.0807

LAND LOT 298, 16TH DISTRICT
1447 GA-138
CONYERS, GEORGIA 30013
ROCKDALE COUNTY

THE KRYSTAL COMPANY
KRYSTAL RESTAURANT - ATL034
SITE DEVELOPMENT PLANS
CONSTRUCTION DETAILS

DATE 03-23-2018

REVISIONS

GEORGIA REGISTERED No. 18140 PROFESSIONAL ENGINEER MICHAEL D. RITCH

DRAWN BY: JTR
CHECKED BY: MDR
PROJECT MANAGER: MDR
JOB #: 17003568
FILE CODE: CP
SHEET NO. C700

CAD FILE: 17003568-C700 DETAILS

FILE NAME: K:\17003568\DWG\Engineering\04 PRODUCTION\17003568-C700 DETAILS.dwg LAST SAVED BY: trutledge 3/22/2018 2:32 PM PLOTTED BY: Trae Rutledge 3/23/2018 PAPER: PREVIOUS PAPER SIZE (24.00 X 36.00 INCHES) DEVICE: DWG TO PDF.PC3 PLOT STYLE: ATWELL.CTB

Order Plans @ www.DDLine.com