REFER TO ARCHITECTURAL DRAWINGS FOR LOCATION OF CASHWRAP.

CASHWRAP COUNTER DETAIL
WHITE BARN CANDLE
4 REGISTER CASHWRAP

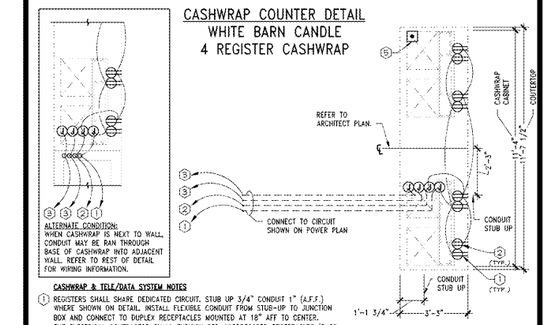

1 CASHWRAP POWER

CASHWRAP & TELE/DATA SYSTEM NOTES

1. REGISTERS SHALL SHARE DEDICATED CIRCUIT. STUB UP 3/4" CONDUIT 1" (A.F.F.) WHERE SHOWN ON DETAIL. INSTALL FLEXIBLE CONDUIT FROM STUB-UP TO JUNCTION BOX AND CONNECT TO DUPLEX RECEPTACLES MOUNTED AT 18" AFF TO CENTER. THE ELECTRICAL CONTRACTOR SHALL FURNISH RED #CR85562RED RECEPTACLES (PASS & SEYMOUR). CUT AND PATCH FLOOR AS REQUIRED TO ROUTE CONDUIT TO WALL AS SHOWN. ROUTE UP INSIDE WALL TO CEILING SPACE AND CONNECT TO PANEL LOCATED INSIDE IFS ENCLOSURE. REFER TO POWER PLAN AND PANEL SCHEDULES FOR CIRCUIT DESIGNATIONS.
2. DUPLEX RECEPTACLE. STUB UP 3/4" CONDUIT 1" (A.F.F.) WHERE SHOWN ON DETAIL. INSTALL FLEXIBLE CONDUIT FROM STUB-UP TO JUNCTION BOX AND CONNECT TO DUPLEX RECEPTACLES MOUNTED AT 18" AFF TO CENTER. CUT AND PATCH FLOOR AS REQUIRED TO ROUTE UP INSIDE WALL TO CEILING SPACE AND BACK TO PANEL AS INDICATED ON POWER PLAN. USE THIS RECEPTACLE FOR CASHWRAP LIGHTING POWER.
3. STUB UP 3/4" CONDUIT 1" (A.F.F.). INSTALL FLEXIBLE CONDUIT FROM STUB-UP TO 4X4 JUNCTION BOXES FOR DATA AND TELEPHONE. CUT AND PATCH FLOOR AS REQUIRED TO ROUTE CONDUIT TO WALL AS SHOWN. ROUTE UP IN WALL TO CEILING SPACE AND CONNECT TO TELECO STRUCTURE PORTION OF THE IFS ENCLOSURE. WIRE FOR DATA LINES TO BE PULLED AND CONNECTED BY P.O.S. CONTRACTOR.
4. CASHWRAP SHROUD LIGHTING. REFER TO SHEET E03.01 FOR QUANTITY AND ADDITIONAL INFORMATION.
5. INSTALL BUTTON FOR LVAN SYSTEM INSIDE CASHWRAP. COORDINATE EXACT LOCATION WITH LSD&C'S PROJECT MANAGER.

GENERAL NOTES

1. REFER TO ARCHITECTURAL SHEET A11.04 FOR ADDITIONAL INFORMATION.
2. WIRING DEVICES ARE SHOWN FOR REFERENCE ONLY. COORDINATE INSTALLATION LOCATION WITH LSD&C PROJECT MANAGER IN FIELD.
3. DATA TERMINALS AND CONNECTIONS BY P.O.S. CONTRACTOR.
4. RUN METAL CLAD (MC) CABLE TO EACH RECEPTACLE. JUNCTION BOXES THRU WIREWAY WITHIN CASHWRAP COUNTER.
5. WIRING FROM CONDUIT STUB-UP TO JUNCTION BOXES AND FROM JBX TO FLEXIBLE CONDUIT.
6. LABEL AND TAG ALL PULLWIRE RUNS AT EACH END WITH ORIGIN/DESIGNATION.
7. IF FRONT PORTION OF CASHWRAP IS ADJACENT TO WALL, CONTRACTOR SHALL ROUTE CONDUIT FROM THE CASHWRAP TO THE FRONT THROUGH THE WALL INSTEAD OF ROUTING THROUGH THE FLOOR.

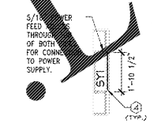

2 SHROUD LIGHTING

CASHWRAP DETAIL - WBCW4R	3/8" = 1'-0"	G
	43D-E0403-G07-WBCW4R	12/26/17

BACKWRAP COUNTER DETAIL
WHITE BARN CANDLE
16.4' BACKWRAP

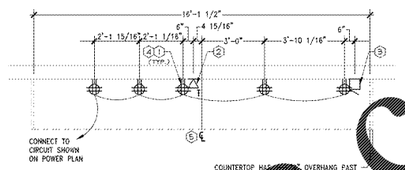

BACKWRAP & TELE/DATA SYSTEM NOTES

1. QUAD RECEPTACLE INSTALLED AT 12" A.F.F. DIRECTLY BELOW CUTOUT IN BACKWRAP FOR UTILITY POWER. CONNECT TO CIRCUIT AS SHOWN ON POWER PLAN.
2. TELEPHONE OUTLET ON INSIDE OF BACKWRAP. INSTALLED AT 12" A.F.F. PROVIDE 3/4" TELEPHONE CONDUIT WITH PULLWIRE TO TELEPHONE. PULL TELEPHONE WIRE AND #RJ11 JACK BY OTHERS.
3. REWARDS BUZZER INSTALLED BY ELECTRICAL CONTRACTOR AT 18" A.F.F. SEE POWER PLAN FOR ADDITIONAL INFORMATION.
4. ILLUMINATED FEEDBACK SCREEN, PLUG LED POWER BACK TO RECEPTACLE. (IF APPLICABLE)
5. CENTERLINE OF BACKWRAP CABINET.

GENERAL NOTES

1. REFER TO ARCHITECTURAL SHEET A11.04 FOR ADDITIONAL INFORMATION.
2. WIRING DEVICES ARE SHOWN FOR REFERENCE ONLY. COORDINATE FINAL INSTALLATION LOCATION WITH LSD&C PROJECT MANAGER IN FIELD.
3. DATA TERMINALS AND CONNECTIONS BY P.O.S. CONTRACTOR.
4. LABEL AND TAG ALL PULLWIRE RUNS AT EACH END WITH ORIGIN/DESIGNATION.

BACKWRAP DETAIL - WBBW-16.4-V01-LB	3/8" = 1'-0"	C
	43D-E0403-C04-WBBWB.4	12/26/17

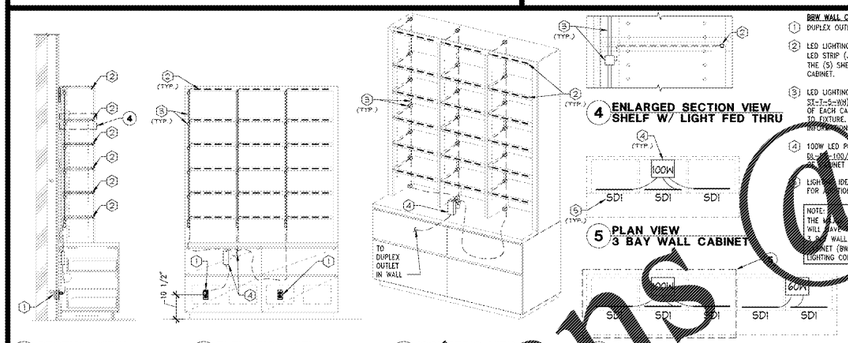

1 SECTION VIEW 3 BAY WALL CABINET
2 ELEVATION VIEW 3 BAY WALL CABINET
3 ISOMETRIC VIEW 3 BAY WALL CABINET
4 ENLARGED SECTION VIEW SHELF W/ LIGHT FED THRU
5 PLAN VIEW 3 BAY WALL CABINET
5 PLAN VIEW 5 BAY WALL CABINET

BBW WALL CABINET – 3 BAY WIRING NOTES

1. DUPLEX OUTLET IN WALL. REFER TO POWER PLAN FOR LOCATIONS.
2. LED LIGHTING. WITHIN EACH 20" CABINET BAY, MOUNT (1) 16" LED STRIP (JESCO: S601-16/40) TO THE UNDERSIDE OF EACH OF THE (5) SHELVES AND (1) 16" LED STRIP AT THE TOP OF THE CABINET.
3. LED LIGHTING IS POWERED FROM SMART TRACK SYSTEM (JESCO: ST-T-5-WH) MOUNTED IN THE CHANNEL, IN REAR LEFT CORNER OF EACH CABINET BAY. RUN WIRE THROUGH SHELF AND CONNECT TO FIXTURE. REFER TO LIGHT FIXTURE SCHEDULE FOR ADDITIONAL INFORMATION.
4. 100W LED POWER SUPPLY WITH 3-WAY SPLITTER (JESCO: DL-PS-100/24 & DL-PS-3Y). LOCATE DRIVER/SPLITTER IN BASE OF CABINET BEHIND DRAWERS.
5. LIGHTING IDENTIFICATION TAG. REFER TO LIGHT FIXTURE SCHEDULE FOR ADDITIONAL INFORMATION.

NOTE:
THE WINGS OF A 5 BAY WALL CABINET (BWWC5-V01-XX) WILL HAVE THE SAME LIGHTING COMPONENTS AS SHOWN IN THE 3 BAY WALL CABINET (BWWC3-V01-XX). SEE 2 BAY WALL CABINET (BWWC2-V01-XX) WIRING DETAIL FOR MINOR HALF LIGHTING COMPONENTS.

BBW WALL CABINET - 3 BAY WIRING DETAIL	1/2" = 1'-0"	K
	43D-E0403-K00-DETL	12/22/17

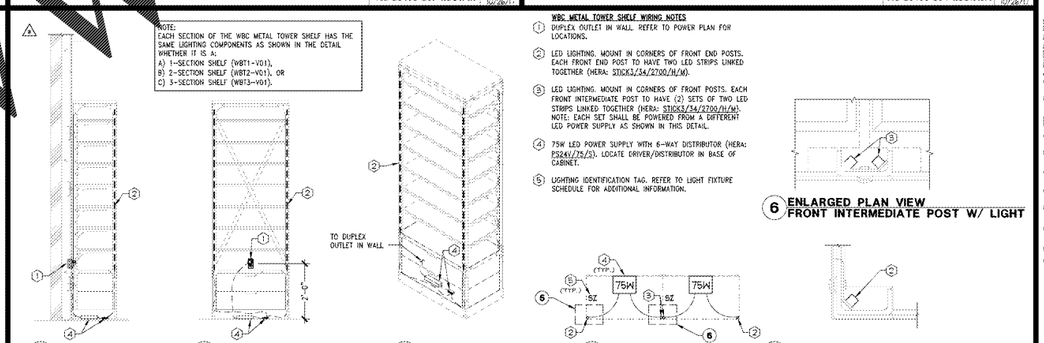

1 SECTION VIEW 1 SECTION SHELF
2 ELEVATION VIEW 1 SECTION SHELF
3 ISOMETRIC VIEW 1 SECTION SHELF
4 PLAN VIEW 2 SECTION SHELF
5 ENLARGED PLAN VIEW FRONT LEFT END POST W/ LIGHT
6 ENLARGED PLAN VIEW FRONT INTERMEDIATE POST W/ LIGHT

WBC METAL TOWER SHELF WIRING NOTES

1. DUPLEX OUTLET IN WALL. REFER TO POWER PLAN FOR LOCATIONS.
2. LED LIGHTING. MOUNT IN CORNERS OF FRONT END POSTS. EACH FRONT END POST TO HAVE TWO LED STRIPS LINKED TOGETHER (HERA: STICK3/24/2700/H/W).
3. LED LIGHTING. MOUNT IN CORNERS OF FRONT POSTS. EACH FRONT INTERMEDIATE POST TO HAVE (2) SETS OF TWO LED STRIPS LINKED TOGETHER (HERA: STICK3/24/2700/H/W). NOTE: EACH SET SHALL BE POWERED FROM A DIFFERENT LED POWER SUPPLY AS SHOWN IN THIS DETAIL.
4. 75W LED POWER SUPPLY WITH 6-WAY DISTRIBUTOR (HERA: FS241/75/3). LOCATE DRIVER/DISTRIBUTOR IN BASE OF CABINET.
5. LIGHTING IDENTIFICATION TAG. REFER TO LIGHT FIXTURE SCHEDULE FOR ADDITIONAL INFORMATION.

WBC METAL TOWER SHELF WIRING DETAIL	1/2" = 1'-0"	B
	43D-E0403-B00-DETL	12/22/17

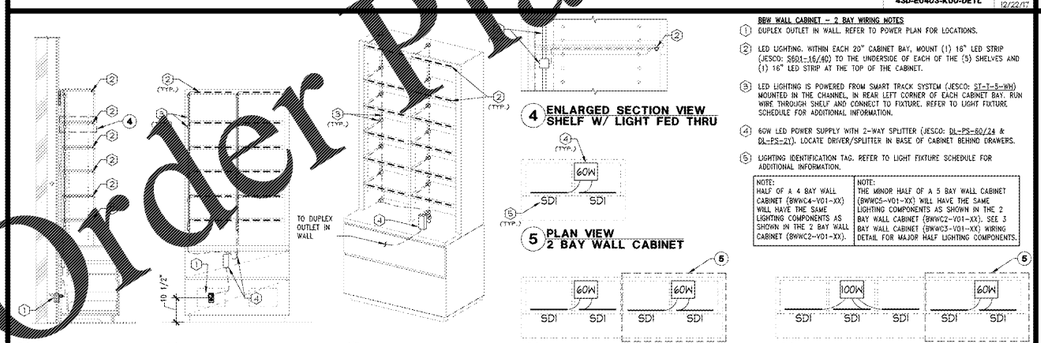

1 SECTION VIEW
2 ELEVATION VIEW 2 BAY WALL CABINET
3 ISOMETRIC VIEW 2 BAY WALL CABINET
4 ENLARGED SECTION VIEW SHELF W/ LIGHT FED THRU
5 PLAN VIEW 2 BAY WALL CABINET
6 PLAN VIEW 4 BAY WALL CABINET
7 PLAN VIEW 5 BAY WALL CABINET

BBW WALL CABINET – 2 BAY WIRING NOTES

1. DUPLEX OUTLET IN WALL. REFER TO POWER PLAN FOR LOCATIONS.
2. LED LIGHTING. WITHIN EACH 20" CABINET BAY, MOUNT (1) 16" LED STRIP (JESCO: S601-16/40) TO THE UNDERSIDE OF EACH OF THE (5) SHELVES AND (1) 16" LED STRIP AT THE TOP OF THE CABINET.
3. LED LIGHTING IS POWERED FROM SMART TRACK SYSTEM (JESCO: ST-T-5-WH) MOUNTED IN THE CHANNEL, IN REAR LEFT CORNER OF EACH CABINET BAY. RUN WIRE THROUGH SHELF AND CONNECT TO FIXTURE. REFER TO LIGHT FIXTURE SCHEDULE FOR ADDITIONAL INFORMATION.
4. 60W LED POWER SUPPLY WITH 2-WAY SPLITTER (JESCO: DL-PS-60/24 & DL-PS-2Y). LOCATE DRIVER/SPLITTER IN BASE OF CABINET BEHIND DRAWERS.
5. LIGHTING IDENTIFICATION TAG. REFER TO LIGHT FIXTURE SCHEDULE FOR ADDITIONAL INFORMATION.

NOTE:	NOTE:
HALF OF A 4 BAY WALL CABINET (BWWC4-V01-XX) WILL HAVE THE SAME LIGHTING COMPONENTS AS SHOWN IN THE 2 BAY WALL CABINET (BWWC2-V01-XX).	THE MINOR HALF OF A 5 BAY WALL CABINET (BWWC5-V01-XX) WILL HAVE THE SAME LIGHTING COMPONENTS AS SHOWN IN THE 2 BAY WALL CABINET (BWWC2-V01-XX). SEE 3 BAY WALL CABINET (BWWC3-V01-XX) WIRING DETAIL FOR MAJOR HALF LIGHTING COMPONENTS.

BBW WALL CABINET - 2 BAY WIRING DETAIL	1/2" = 1'-0"	J
	43D-E0403-J00-DETL	12/22/17

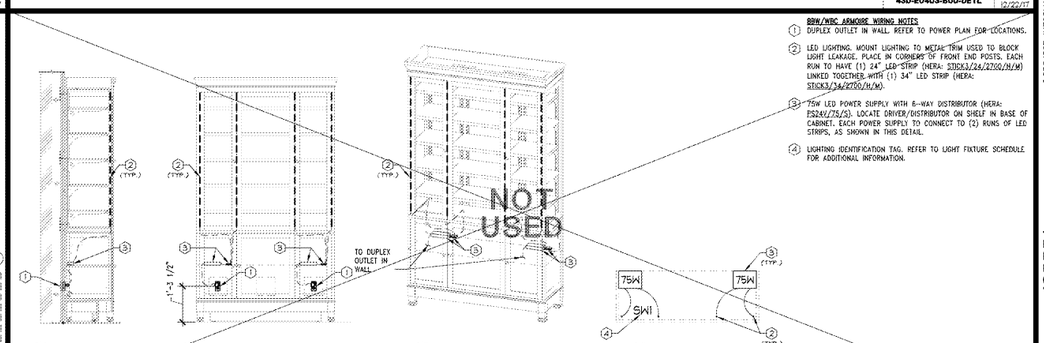

1 SECTION VIEW
2 ELEVATION VIEW
3 ISOMETRIC VIEW
4 PLAN VIEW

BBW/WBC ARMOIRE WIRING NOTES

1. DUPLEX OUTLET IN WALL. REFER TO POWER PLAN FOR LOCATIONS.
2. LED LIGHTING. MOUNT LIGHTING TO METAL TRIM USED TO BLOCK LIGHT LEAKAGE. PLACE IN CORNERS OF FRONT END POSTS. EACH RUN TO HAVE (1) 24" LED STRIP (HERA: STICK3/24/2700/H/W) LINKED TOGETHER WITH (1) 34" LED STRIP (HERA: STICK3/34/2700/H/W).
3. 75W LED POWER SUPPLY WITH 6-WAY DISTRIBUTOR (HERA: FS241/75/3). LOCATE DRIVER/DISTRIBUTOR ON SHELF IN BASE OF CABINET. EACH POWER SUPPLY TO CONNECT TO (2) RUNS OF LED STRIPS, AS SHOWN IN THIS DETAIL.
4. LIGHTING IDENTIFICATION TAG. REFER TO LIGHT FIXTURE SCHEDULE FOR ADDITIONAL INFORMATION.

BBW/WBC ARMOIRE WIRING DETAIL	1/2" = 1'-0"	A
	43D-E0403-A00-DETL	12/22/17

Thorson•Baker + Associates
CONSULTING ENGINEERS
3030 West Streetsboro Road
Hardinsburg, Ohio 44266
(330) 669-6668 Ph.
(330) 669-6676 Fax

Lbrands
STORE DESIGN & CONSTRUCTION
Three Limited Parkway · Columbus, Ohio 43230
Telephone: 614.415.7000 · Fax: 614.415.7349

PROVIDED IN WORD
THESE DRAWINGS AND SPECIFICATIONS WERE PREPARED FOR USE ON A SPECIFIC SITE, FOR A SPECIFIC PROJECT, AND FOR A SPECIFIC CLIENT. THEY ARE NOT INTENDED OR REPRESENTED TO BE SUITABLE FOR REUSE ON OTHER PROJECTS OR FOR ANY OTHER PURPOSE, OR AT ANY LOCATION OTHER THAN THE ORIGINAL PROJECT SITE. ANY REUSE OF THESE DRAWINGS AND SPECIFICATIONS WITHOUT WRITTEN VERIFICATION OR ADAPTATION BY THE ARCHITECT FOR THE SPECIFIC PURPOSE INTENDED WILL BE AT THE USER'S SOLE RISK AND WITHOUT LIABILITY OR LEGAL EXPOSURE TO THE ARCHITECT. ANY ALTERATION OF THESE DRAWINGS AND SPECIFICATIONS, INCLUDING THE REMOVAL OF THE ARCHITECT'S SEAL, IS PROHIBITED.

THESE DRAWINGS AND SPECIFICATIONS ARE COPYRIGHTED AND SUBJECT TO COPYRIGHT PROTECTION AS AN "ARCHITECTURAL WORK" UNDER SECTION 102 OF THE COPYRIGHT ACT, AS AMENDED DECEMBER 1990. OWNER IS THE ARCHITECT. RIGHTS DO NOT INCLUDE THE RIGHT TO THE PHYSICAL CONSTRUCTION OF THE PROJECT. OWNERSHIP OF THE ORIGINAL DRAWINGS AND SPECIFICATIONS REMAINS WITH THE ARCHITECT.

PROJECT INFORMATION:
104.01.2445.01
BATH & BODY WORKS
CHARLOTTE PREMIUM OUTLETS
5404 NEW FASHION WAY
SPACE NO. 240
CHARLOTTE, NC 28278

SCOPE: BBW ES/WBC 2016
DESIGN TYPE: NEW
LSD&C PROJECT #: 09107978
PACKAGE: SIG PKG 2
GENERATION: 1815r.03
A/E PROJECT #: 51851.2

REVISIONS:
DESIGNED BY: DATE

ELITE CONSTRUCTION GROUP
LAKE JACKSON, TX
PHONE: 979.285.0792
NOTE: THESE PRINTS HAVE BEEN REDUCED BY 50 PERCENT. SCALE WILL BE 50 PERCENT OF WHAT IS NOTED ON PLANS

DATE ISSUED: 03/13/18
DESIGNED BY: RDW
DRAWN BY: TBA
CHECKED BY: JDM

ELECTRICAL DETAILS

DRAWING NUMBER:
E04.03

Order Plans at WWW.LDline.com