NOTES:

1. PROVIDE HACR TYPE BREAKERS FOR ALL HVAC AND REFRIGERATION EQUIPMENT.
2. PROVIDE LOCK-ON DEVICES FOR ALL DUCT DETECTORS, FACP, EMERGENCY, SECURITY, REFRIGERATION AND OTHER CIRCUITS THAT REQUIRED TO HAVE POWER 24/7 WITHOUT INTERRUPTION.
3. PROVIDE SENSOR POWER WHERE FLUSH VALVE TOILETS ARE USED AND REQUIRE IT, OR LAVS REQUIRE IT.

Larson
www.larsonengr.com

EXISTING PANELBOARD A

PANEL: A | TYPE: | BUS: 400A | VOLTAGE: 120/ 208 3 PHASE, 4 WIRE

LOCATION: REAR OF SPACE
PANEL WIDTH 20"
ENCLOSURE: NEMA 1
BUS TYPE: COPPER

MOUNTING: FLUSH / ⇒ SURFACE
FEEDER: TOP / ⇒ BOTTOM
MAIN: 400A / ⇒ MAIN BREAKER / MAIN LUGS ONLY
NEUTRAL: ⇒ 100% / 200%
GROUND: ⇒ EQUIPMENT / ISOLATED
OPTIONS: ⇒ BOLT-ON CIRCUIT BREAKERS / FEED THRU LUGS / MONO-FLUSH TRIM / SHUNT TRIP
FEED FROM: METER
UPSTREAM PROTECTIVE DEVICE:

SHORT CIRCUIT RATING: EXISTING

ITEM	PHASE	NEUT	GND	COND	TYPE	AMP. RATING	POLE	CIR. NO.	LEFT PHASE LOAD A	LEFT PHASE LOAD B	LEFT PHASE LOAD C	RIGHT PHASE LOAD A	RIGHT PHASE LOAD B	RIGHT PHASE LOAD C	CIR. NO.	POLE	AMP. RATING	TYPE	COND	GND	NEUT	PHASE	ITEM
LIGHTING - TRACK	#12	#12	#12	3/4"	L	20	1	1	900			1200			2	20	1	L	3/4"	#12	#12	#12	LIGHTING - SIGN
LIGHTING - LOBBY	#12	#12	#12	3/4"	L	20	1	3		302			400		4	20	1	L	3/4"	#12	#12	#12	LIGHTING - MENU BOARD
SALES RECEPTACLE	#12	#12	#12	3/4"	R	20	1	5			600			696	6	25	1	K	3/4"	#12	#12	#12	KITCHEN EXHAUST FAN
LIGHTING - BACK OF HOUSE	#12	#12	#12	3/4"	L	20	1	7	1570			7620			8	3	100	E	EXISTING				SUBPANEL 'B'
2 - DOUBLE RACK OVEN	#12	#12	#12	3/4"	K	20	3	9		800			7620		10			E					
	#12	-	-	-	K			11			800			7620	12			E					
	#12	-	-	-	K			13	800			5164			14	3	90	M	EXISTING				EHP-1
1.2.2 - WALK-IN REF CONDENSER	#12	#12	#12	3/4"	K	15	2	15		884			5164		16			M					
	#12	-	-	-	K			17			884			5164	18			M					
1-WALK-IN LTS AND DOOR HTR	#12	#12	#12	3/4"	K	20	1	19	744			5164			20	3	90	E	EXISTING				EHP-2
1.1.1 - WALK-IN CHILLER EVAP	#12	#12	#12	3/4"	K	20	2	21		1633			5164		22			E					
	#12	-	-	-	K			23			1633			5164	24			E					
1.2.1 - WALK-IN CHILLER CONDENSER	#8	#8	#10	3/4"	K	40	3	25	4563			10688		.	26	3	100	E	1-1/4"	#8	-	#3	EAHU-1
	#8	-	-	-	K			27		4563			10688		28			E	-	-	-	#3	
	#8	-	-	-	K			29			4563			10688	30			E	-	-	-	#3	
HEAT TRACE	#12	#12	#12	3/4"	K	20	1	31	1000			10688			32	3	100	E	1-1/4"	#8	-	#3	EAHU-2
EF-1 / EF-2	#12	#12	#12	3/4"	E	20	1	33		100			10688		34			E	-	-	-	#3	
RECEPTACLE - REF	#12	#12	#12	3/4"	R	20	1	35			180			10688	36			E	-	-	-	#3	
1.1.2 - EVAPORATOR COIL - REFRIGERATOR	#12	#12	#12	3/4"	R	20	1	37	432			200			38	1	20	E	3/4"	#12	#12	#12	MOTORIZED DAMPER
SPACE	-	-	-	-	X			39		0			0		40			X	-	-	-	-	SPACE
SPACE	-	-	-	-	X			41			0			0	42			X	-	-	-	-	SPACE
CONNECTED LOAD (VA)									10009	8282	8660	40724	39724	40020									
CONNECTED LOAD PER PHASE (VA)									50733	48006	48680												

PHASE BALANCE (%) 98.2 %

DEMAND			
TYPE		FACTOR	LOAD
L	LIGHTING	1.25	5465
R	RECEPTACLES	1.00	1212
M	MOTORS	1.25	19365
E	EQUIPMENT	0.80	82224
S	SPARE	1.00	0
K	KITCHEN EQUIP	0.65	14796

TOTAL CONNECTED LOAD 147419 VA
TOTAL DEMAND LOAD 123062 VA
TOTAL ESTIMATED DEMAND 342 AMPS

Larson
www.larsonengr.com

EXISTING PANELBOARD B

PANEL: B | TYPE: | BUS: 100A | VOLTAGE: 120/ 208 3 PHASE, 4 WIRE

LOCATION: REAR OF SPACE
PANEL WIDTH 20"
ENCLOSURE: NEMA 1
BUS TYPE: COPPER

MOUNTING: FLUSH / ⇒ SURFACE
FEEDER: ⇒ TOP / BOTTOM
MAIN: 100A / MAIN BREAKER / ⇒ MAIN LUGS ONLY
NEUTRAL: ⇒ 100% / 200%
GROUND: ⇒ EQUIPMENT / ISOLATED
OPTIONS: ⇒ BOLT-ON CIRCUIT BREAKERS / ⇒ FEED THRU LUGS / MONO-FLUSH TRIM / SHUNT TRIP
FEED FROM: PANEL A
UPSTREAM PROTECTIVE DEVICE:

SHORT CIRCUIT RATING: EXISTING

ITEM	PHASE	NEUT	GND	COND	TYPE	AMP. RATING	POLE	CIR. NO.	LEFT PHASE LOAD A	LEFT PHASE LOAD B	LEFT PHASE LOAD C	RIGHT PHASE LOAD A	RIGHT PHASE LOAD B	RIGHT PHASE LOAD C	CIR. NO.	POLE	AMP. RATING	TYPE	COND	GND	NEUT	PHASE	ITEM
RECEPTACLE - EMPLOYEE DESK	#12	#12	#12	3/4"	R	20	1	1	180			400			2	1	20	E	3/4"	#12	#12	#12	WHJ CONTROL / RECIRC PUMP
MENU BOARD	#12	#12	#12	3/4"	R	20	1	3		1000			200		4	1	*20	R	EXISTING				EXIT LIGHTS
MENU BOARD	#12	#12	#12	3/4"	R	20	1	5			1000			1200	6	1	20	R	3/4"	#12	#12	#12	RECEPTACLE - DIGITAL CAKE BOOK
67 - PRINTER	#12	#12	#12	3/4"	R	20	1	7	500			720			8	1	20	R	3/4"	#12	#12	#12	RECEPTACLE - CRAFT
RECEPTACLE - TELCO	#12	#12	#12	3/4"	R	20	1	9		200			540		10	1	20	R	3/4"	#12	#12	#12	RECEPTACLE - SHOW WINDOW
2 - RACK OVEN CONTROLS	#12	#12	#12	3/4"	K	20	1	11			600			900	12	1	20	R	3/4"	#12	#12	#12	RECEPTACLE - BAKING/FROST
3 - FLOOR MIXER	#12	#12	#12	3/4"	K	20	3	13	1200			540			14	1	20	R	3/4"	#12	#12	#12	RECEPTACLE - DISH AREA
	#12	-	-	-	K			15		1200			1200		16	1	20	R	3/4"	#12	#12	#12	RECEPTACLE - CPU
	#12	-	-	-	K			17			1200			720	18	1	20	R	3/4"	#12	#12	#12	RECEPTACLE - OFFICE
4 - BAKERY CASE	#12	#12	#12	3/4"	K	20	1	19	1500			1500			20	1	20	R	3/4"	#12	#12	#12	RECEPTACLE - RESTROOM
BAKERY CASE	#12	#12	#12	3/4"	K	20	1	21		1500			720		22	1	20	R	3/4"	#12	#12	#12	RECEPTACLE - LOBBY
SPARE	-	-	-	-	S	20	1	23			0			720	24	1	20	R	3/4"	#12	#12	#12	47 - [illegible]
27 - DRINKING FOUNTAIN	#12	#12	#12	3/4"	K	20	1	25	200			700			26	1	20	R	3/4"	#12	#12	#12	47 - [illegible]
82 - MIXER	#12	#12	#12	3/4"	K	20	1	27		1200			1500		28	1	20	E	EXISTING				GARA[illegible]OR
83 - MICROWAVE	#12	#12	#12	3/4"	K	20	1	29			1000			200	30	1	20	E	EXISTING				(GAS HEATE[illegible]-1)
REAR EXTERIOR LIGHTS	EXISTING				L	20	1	31	1200			600			32	1	20	R	3/4"	#12	#12	#12	TIMECLO[illegible]
FIRE ALARM CONTROL PANEL	EXISTING				R	20	1	33		600			600		34	1	20	R	3/4"	#12	#12	#12	RECEPTACLE - SE[illegible]
RECEPTACLE - MANAGER DESK	#12	#12	#12	3/4"	R	20	1	35			360			540	36	1	20	R	3/4"	#12	#12	#12	RECEPTACLE - H[illegible]
RECEPTS - CRAFT AREA	#12	#12	#12	3/4"	R	20	1	37	360			720			38	1	20	R	3/4"	#12	#12	#12	47 - POS
SPACE	-	-	-	-	X			39		0			1200		40	1	20	K	3/4"	#12	#12	#12	89 [illegible]OWAVE (OPTIO[illegible]
SPACE	-	-	-	-	X			41			0			0	42			X	-	[illegible]	[illegible]	[illegible]	SPACE
CONNECTED LOAD (VA)									5140	5700	4160	5180	5960	4280									
CONNECTED LOAD PER PHASE (VA)									10320	11660	8440												

PHASE BALANCE (%) 89.4 %

DEMAND			
TYPE		FACTOR	LOAD
L	LIGHTING	1.25	1500
R	RECEPTACLES	0.75	12240
M	MOTORS	1.25	0
E	EQUIPMENT	1.00	[illegible]
S	SPARE	1.00	0
K	KITCHEN	0.65	7020

TOTAL CONNECTED LOAD 30420 VA
TOTAL DEMAND LOAD 22860 VA
TOTAL ESTIMATED DEMAND 63 AMPS

NOTE:
PROVIDE BREAKERS WITH MINIMUM RATING OF 22,000 AIC.

1 PANEL SCHEDULES
NTS

KEYED NOTES

1. EXISTING METER BANK. PROVIDE LABEL METER WITH SUITE NUMBER AND TENANT NAME.
2. EXISTING 400A/3P PANEL AND BREAKERS. REFER TO PANEL SCHEDULE.
3. PROVIDE PHENOLIC LAMINATED LABELS (BLACK WITH WHITE LETTERING) ON FRONT OF DISCONNECT SWITCH AND PANELS.
4. EXISTING 100A/3P TENANT SUB-PANEL AND BREAKERS. REFER TO PANEL SCHEDULE.
5. SHOWN FOR SITE CONDITIONS ONLY. VERIFY WHICH METER/DISCONNECT BELONGS TO TENANT PRIOR TO COMMENCING WORK.

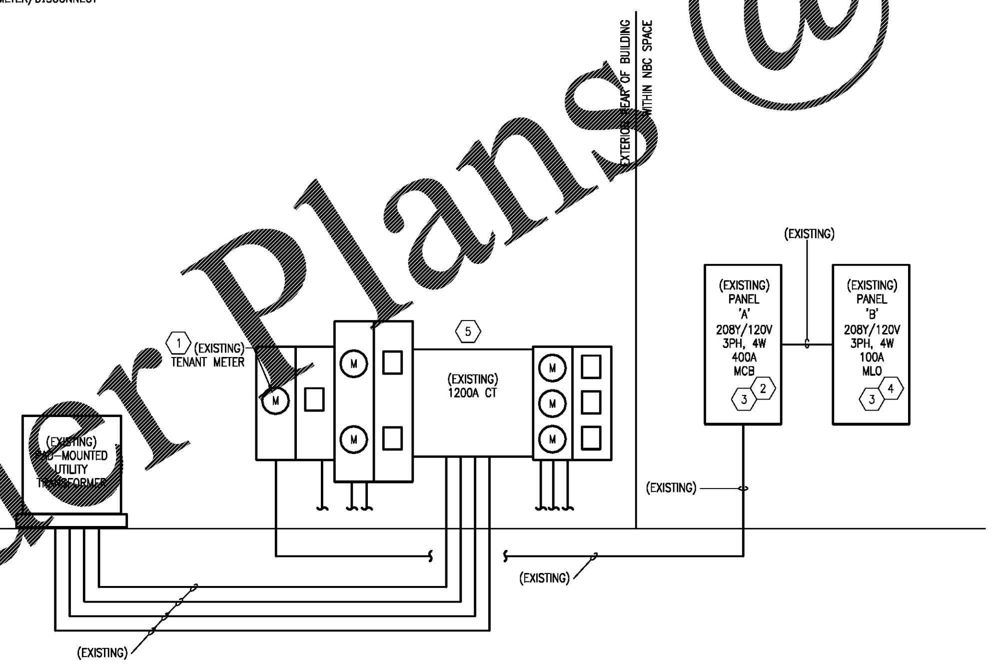

2 ELECTRICAL DISTRIBUTION RISER DIAGRAM
NTS

FAULT CURRENT CALCULATION

TRANSFORMER SIZE (KVA)	300
TRANSFORMER Z (%)	5.3
"C" FACTOR (#500 KCMIL COND.)	31,859
NUMBER OF CONDUCTORS PER PHASE	4
LINE TO LINE VOLTAGE	208
LINE TO NEUTRAL VOLTAGE	120
LENGTH OF SERVICE	35

$$I = \frac{300 \times 1000}{1.73 \times 208} = 833$$

$$I(sca) = \frac{833 \times 100}{5.30} = 15{,}712$$

$$F = \frac{15{,}712 \times 1.73 \times 35}{4 \times 31{,}859 \times 208} = 0.04$$

$$M = \frac{1}{1+0.04} = \frac{1}{1.04} = 0.97$$

Isc AT SERVICE DISCONNECT= 15,712 X 0.97 = 15,167

TENANT MINIMUM SERVICE EQUIPMENT RATING = 22,000 A.I.C.

NOTE TO CONTRACTOR:

AVAILABLE SHORT CIRCUIT RATINGS FOR THE SERVICE DISTRIBUTION EQUIPMENT AND PANELS HAVE BEEN ESTIMATED BASED ON AN ASSUMED SERVICE TRANSFORMER SIZE AND IMPEDANCE. FAULT CURRENTS HAVE BEEN CALCULATED ASSUMING AN "INFINITE BUS" AT THE SERVICE TRANSFORMER PRIMARY. ACTUAL AVAILABLE SHORT CIRCUIT CURRENT AT THE SERVICE DISTRIBUTION EQUIPMENT WILL DEPEND UPON FINAL UTILITY COMPANY TRANSFORMER SELECTION AND PRIMARY FAULT CALCULATIONS. THE AVAILABLE SHORT CIRCUIT CURRENT MAY VARY FROM THE ENGINEER'S CALCULATED VALUES. THE CONTRACTOR SHALL OBTAIN THE ACTUAL TRANSFORMER AVAILABLE SHORT CIRCUIT INFORMATION FROM THE ELECTRICAL UTILITY PROVIDER AT THE TIME OF CONSTRUCTION AND PRIOR TO ORDERING DISTRIBUTION EQUIPMENT AND PANELS. THIS INFORMATION SHALL BE USED TO DETERMINE EXACT A.I.C. RATINGS NEEDED FOR THIS EQUIPMENT. THIS INFORMATION SHALL BE PROVIDED TO THE ENGINEER FOR APPROVAL PRIOR TO ORDERING EQUIPMENT.

UTILITY CONTACT:

MIDDLE TENNESSEE ELECTRIC
1475 N. MT. JULIET ROAD
MT. JULIET, TN 37122
Phone: (877) 777-9020

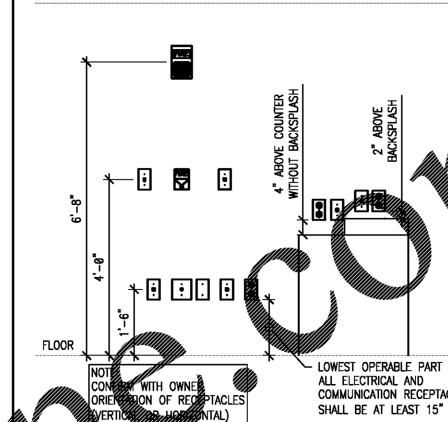

3 TYPICAL MOUNTING HEIGHTS
NTS

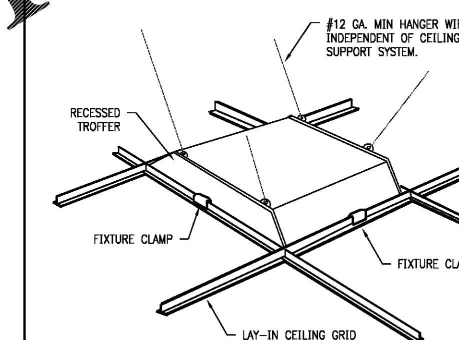

4 RECESSED FIXTURE MOUNTING
NTS

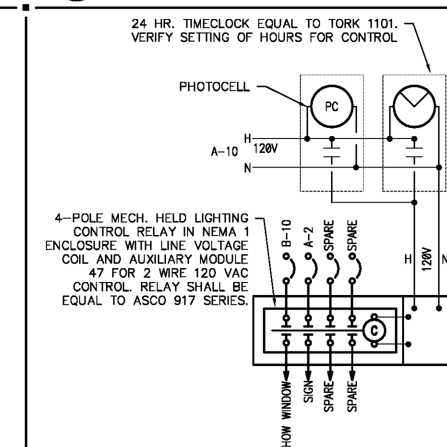

5 LIGHTING CONTROL DIAGRAM - EXT.
NTS

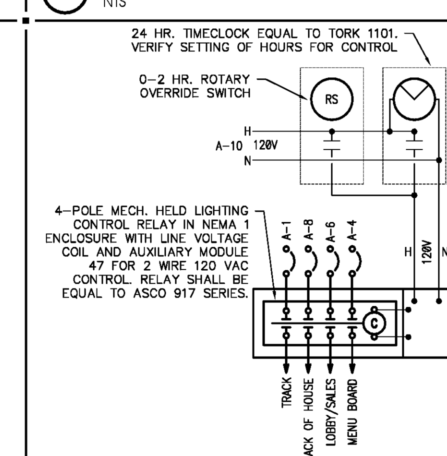

6 LIGHTING CONTROL DIAGRAM - INT.
NTS

INTERPLAN LLC
ARCHITECTURE
ENGINEERING
INTERIOR DESIGN
PROJECT MANAGEMENT

604 COURTLAND STREET
SUITE 100
ORLANDO, FLORIDA 32804
PH 407.645.5008
FX 407.629.9124

SEAL:
THIS DOCUMENT IS "**NOT FOR CONSTRUCTION**" UNLESS THE ARCHITECT OR ENGINEER'S SIGNATURE AND SEAL APPEAR BELOW.

Larson Engineering, Inc.
1488 Bond Street, Suite 100
Naperville, Illinois 60563-6503
(P) 630.357.0540 (F) 630.357.0164
ILLINOIS LICENSE NO. 184-001442
LEIL Comm. No. 24180016.006

COPYRIGHT © 2018

04.11.18 PERMIT SUBMIT
04.04.18 OWNER REVIEW
NO DATE REMARKS
REVISIONS

NOTHING bundt CAKES

CREEKSIDE PLAZA
4110 N MT. JULIET RD.
MT. JULIET, TN 37122

PROJECT NO: 2018.0044
DATE: 04.11.18

E3.0

ELECTRICAL SCHEDULES

CHECKED: MFG DRAWN: SLB

Order Plans @ WWW.LDIILine.com