1. DESIGN DRAWINGS ARE SCHEMATIC. THE CONTRACTOR SHALL VISIT THE SITE PRIOR TO BIDDING OR AWARD OF CONTRACT TO INSPECT EXISTING FIELD CONDITIONS. THE CONTRACTOR SHALL INCLUDE ALL LABOR AND MATERIALS NECESSARY FOR FIELD MODIFICATIONS DUE TO EXISTING CONDITIONS.
2. THE CONTRACTOR SHALL CONTACT THE ARCHITECT, ENGINEER OR TENANT PRIOR TO BIDDING FOR INTERPRETATIONS AND CLARIFICATIONS OF THE DESIGN AND INCLUDE IN THE BID ALL COSTS TO MEET THE DESIGN INTENT. CLARIFICATIONS MADE BY THE ARCHITECT, ENGINEER OR TENANT AFTER BIDDING WILL BE FINAL AND SHALL BE IMPLEMENTED AT THE CONTRACTORS COST.
3. BIDDING CONTRACTORS SHALL HAVE A WORKING KNOWLEDGE OF LOCAL CODES AND ORDINANCES AND SHALL INCLUDE IN THEIR BIDS THE COSTS FOR ALL WORK INSTALLED IN STRICT ACCORDANCE WITH GOVERNING CODES, THE PLANS AND SPECIFICATIONS NOT WITHSTANDING. THE CONTRACTOR SHALL ALERT ARCHITECT, ENGINEER OR TENANT OF ANY APPARENT DISCREPANCIES BETWEEN GOVERNING CODES AND DESIGN INTENT
4. LIGHTING SHALL BE CIRCUITED EXACTLY AS SHOWN ON PLANS.
5. REFER TO ARCHITECTURAL REFLECTED CEILING PLAN FOR EXACT LOCATION AND QUANTITY OF LIGHTING FIXTURES
6. EMERGENCY AND EXIT LIGHTS SHALL BE INSTALLED AND CIRCUITED PER THE LATEST NATIONAL ELECTRICAL CODE AND ALL LOCAL CODES. ALL EMERGENCY AND EXIT FIXTURES SHALL BE DUAL VOLTAGE (120/277 VOLT INPUT) WITH BATTERY BACKUP.
7. CONTRACTOR IS RESPONSIBLE FOR ALL REFLECTED CEILING PLAN NOTES ON ARCHITECTURAL DRAWINGS.
8. FIELD VERIFY ALL CONDITIONS

LIGHTING PLAN GENERAL NOTES — S

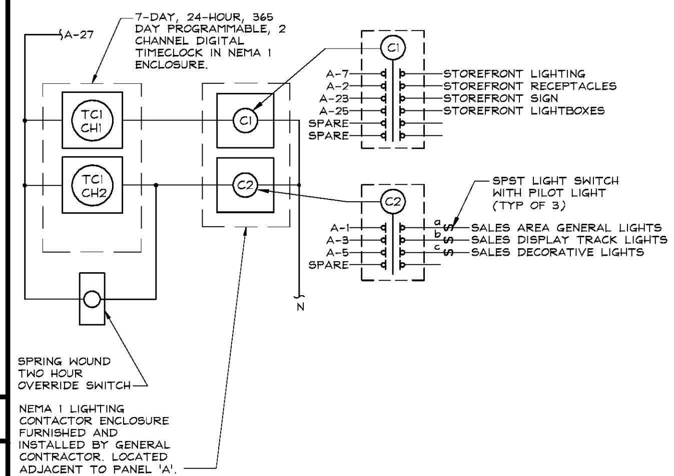

NOTE:
GENERAL CONTRACTOR TO LABEL LIGHT SWITCHES.

NOTES:
- ALL CONTACTORS ARE NORMALLY OPEN, ELECTRICALLY HELD CLOSED, WITH THE NUMBER OF POLES AS SHOWN.
- SUPPLY POWER TO CONTACTORS THRU A-27 IN ALL CASES.
- LOCATE CONTACTORS AND TIME CLOCK ADJACENT TO PANEL 'A'.

MASTER SWITCH LIGHTING BANK

'or'	'c'	'b'	'a'
	A-5	A-3	A-1
2 HOUR OVERRIDE	SALES DECORATIVE LIGHTING	SALES TRACK LIGHTING	SALES AREA LIGHTING
	SPST	SPST	SPST

LIGHTING CONTROL DETAIL — L

1. LIGHTING CIRCUIT - ZONE 'a' :
CONNECT CIRCUIT THROUGH SINGLE POLE SWITCH AS SHOWN IN LIGHTING CONTROL DETAIL 'L' ON THIS SHEET. SWITCH SHALL BE EQUIPPED WITH PILOT LIGHT, INDICATING THE CONDITION OF THE LIGHTS BEING CONTROLLED. REFER TO CODED NOTE 4 FOR SWITCH LOCATION.
2. LIGHTING CIRCUIT - ZONE 'b' :
CONNECT CIRCUIT THROUGH SINGLE POLE SWITCH AS SHOWN IN LIGHTING CONTROL DETAIL 'L' ON THIS SHEET. SWITCH SHALL BE EQUIPPED WITH PILOT LIGHT, INDICATING THE CONDITION OF THE LIGHTS BEING CONTROLLED. REFER TO CODED NOTE 4 FOR SWITCH LOCATION.
3. LIGHTING CIRCUIT - ZONE 'c' :
CONNECT CIRCUIT THROUGH SINGLE POLE SWITCH AS SHOWN IN LIGHTING CONTROL DETAIL 'L' ON THIS SHEET. SWITCH SHALL BE EQUIPPED WITH PILOT LIGHT, INDICATING THE CONDITION OF THE LIGHTS BEING CONTROLLED. REFER TO CODED NOTE 4 FOR SWITCH LOCATION.
4. MASTER LIGHTING SWITCHBANK:
PROVIDE GANGED SWITCH LOCATION FOR LOCAL LIGHTING SWITCHES. PROVIDE UNDER COMMON FACEPLATE OR MULTIPLE FACEPLATES OF EQUAL WIDTHS. SEE 'LIGHTING CONTROL DETAIL' ON THIS SHEET, DETAIL 'L'. ALL SWITCHES TO BE PILOT LIGHT TYPE, LIGHT ON WHEN SWITCH IS ON.
5. STORE FRONT SIGN:
PROVIDE JUNCTION BOX AND TOGGLE TYPE DISCONNECT SWITCH, IF NOT EXISTING, WITH MINIMUM 12" WHIP FOR CONNECTION TO THE STORE FRONT SIGN. LOCATE ABOVE CEILING IN ACCESSIBLE LOCATION AND EXTEND EXISTING SIGN CIRCUIT TO THIS LOCATION. COORDINATE EXACT REQUIREMENTS WITH SIGN VENDOR.
6. SHOW WINDOW LIGHTING AND SIGN:
ROUTE CIRCUIT THROUGH CONTACTOR CONTROLLED BY TIMECLOCK. SCHEDULE TIMECLOCK TO TURN ON 1/2 HOUR BEFORE STORE OPENING AND OFF AT MIDNIGHT.
7. SALES AREA EMERGENCY/NIGHT LIGHT/EXIT CIRCUIT:
ALL SALES AREA EMERGENCY LIGHTS, NIGHT LIGHTS, AND EXIT SIGNS SHALL BE CONNECTED TO UNSWITCHED CIRCUIT 'A-15'. FIXTURES ARE TO PROVIDE CONTINUOUS EGRESS AND EMERGENCY ILLUMINATION PER NEC 700.16 AND 700.17 AND LIFE SAFETY CODES. PROVIDE SCREW TYPE, LOCK ON DEVICE AT BREAKER.
8. NON-SALES AREA EMERGENCY/NIGHT LIGHT/EXIT CIRCUIT:
ALL NON SALES AREA EMERGENCY LIGHTS, NIGHT LIGHTS, AND EXIT LIGHTS SHALL BE CONNECTED TO UNSWITCHED LEG OF LOCAL LIGHTING CIRCUIT. FIXTURES ARE TO PROVIDE CONTINUOUS EGRESS AND EMERGENCY ILLUMINATION PER NEC 700.16 AND 700.17 AND LIFE SAFETY CODES. PROVIDE SCREW TYPE, LOCK ON DEVICE AT BREAKER.
9. EXHAUST FAN:
EXISTING FAN/LIGHT COMBO TO REMAIN. 120V, 1PH. REFER TO SHEET M1.0 FOR MORE INFORMATION. CONNECT TO LIGHTING CONTROLS AS INDICATED ON PLAN.
10. ~~RUN UNSWITCHED CIRCUIT A-23 TO EMERGENCY BALLAST AND SWITCHED LEG OF CIRCUIT INDICATED ON PLAN TO NORMAL BALLAST TO ALLOW FIXTURE TO BE SWITCHED WITH REST OF CIRCUIT.~~
11. LED SIGN TO BE CONNECTED TO WALL MOUNTED SHOW WINDOW RECEPTACLE. REFER TO POWER PLAN ON SHEET E1.0 FOR CIRCUITING INFORMATION.

LIGHTING PLAN CODED NOTES (#) — G

MARK	SYMBOL	DESCRIPTION	INPUT WATTS
CH-4 CH-4 EM/NL	4' 4'	MERCURY # MM-1-32-OCT-ELB-UNI CHAIN HUNG 1-LAMP 4' FLUORESCENT STRIP, WHITE FINISH (1) PHILIPS F32T8/TL830/ALTO LAMP. FIXTURES MARKED EM HAVE 90 MINUTE BATTERY BACKUP BALLAST (EMPK/1320), 1350 LUMENS.	32 WATTS
R-1		LF ILLUMINATION #MF31CR-T-22L-8030-W-D2-1-WW. SINGLE-LAMP RECESSED INTEGRAL LED DOWNLIGHT.	22 WATTS
R-2		LF ILLUMINATION #MF12CN-T-17L-8030-M-GG-D2-1-WW. TWO-LAMP RECESSED DOWNLIGHT WITH INTEGRAL LED HEADS. FIXTURES DESIGNATED (EM) HAVE 90 MINUTE EMERGENCY BATTERY BACKUP	34 WATTS
TRACK		JUNO TRAC-MASTER SINGLE CIRCUIT TRACK. FINISH TO MATCH TRACK HEADS. PROVIDE ALL COMPONENTS FOR COMPLETE SYSTEM.	---
T-1*		JUNO TRAC-MASTER TRACK HEAD WITH WHITE FINISH, MODEL #T691WH AND TCP 12W, 3000K PAR30S LED LAMP MODEL #LED12P30S30KFL.	12 WATTS
P-1		MCM CLASSICS 24" DIA MOOOI INSPIRED RANDOM CEILING PENDANT WITH BLACK FINISH. (1) 60 WATT LAMP.	60 WATTS
P-2		MCM CLASSICS 16" DIA MOOOI INSPIRED RANDOM CEILING PENDANT WITH BLACK FINISH. (1) 60 WATT LAMP.	60 WATTS
P-3		HI-LITE MANUFACTURING CO., INC. #H-15114-91/3S30-91-WGR-91/13/LED2/30/BCM-M. CORD MOUNTED LED PENDANT WITH BLACK FINISH AND (1) 13 WATT LED LAMP.	13 WATTS
P-4*		HI-LITE OBERON COLLECTION H-24213-91/3S30-[illegible]"-HDSMC-91/CGU-FR-91. (3) 60 WATT INCANDESCENT LAMPS.	180 WATTS
W-1		HI-LITE MANUFACTURING CO., INC. H-15114-91/[illegible]-91-WGR-91/13/LED2/30/BCM-M. LED SCONCE WITH GOOSENECK MOUNT, BLACK FINISH, AND (1) 13 WATT LED LAMP.	13 WATTS
(E)		EXISTING SINGLE CIRCUIT TRACK TO REMAIN.	---
(E)		EXISTING CMH TRACK HEAD TO REMAIN.	23 WATTS
(E)/(R)		EXISTING (E) OR RELOCATED (R) EXIT SIGN WITH 90 MINUTE BATTERY BACK UP.	< 5W PER SIDE
(E)		EXISTING WALL MTD. EMERGENCY WITH 90 MINUTE BATTERY BACK UP.	10W
(E)		EXISTING RECESSED COMPACT FLUORESCENT DOWNLIGHT.	46W
(E)		EXISTING 4'X4' RECESSED LINEAR FLUORESCENT, PROVIDE (4) 28 WATT, T5HO LAMPS	112W
(E)		EXISTING FAN-LIGHT COMBINATION UNIT TO REMAIN.	100 WATTS

LIGHTING SCHEDULE NOTES:
1. ELECTRICAL CONTRACTOR SHALL VERIFY QUANTITIES OF FIXTURES AND LAMPS ON LIGHTING AND POWER PLAN.
2. ALL FIXTURES SHALL BE FURNISHED BY TENANT, INSTALLED AND WIRED BY ELECTRICAL CONTRACTOR.
3. LIGHTING SUPPLIER IS RESPONSIBLE FOR FINAL LIGHTING QUANTITIES.
4. WALL MOUNTED EXIT LIGHTS TO BE MOUNTED AT 12" ABOVE DOOR HEADER UNLESS OTHERWISE NOTED IN PLANS OR ELEVATIONS.
5. LIGHTS WITH -EM/NL INDICATE LIGHTS TO BE WIRED AS EMERGENCY/NIGHT LIGHT.
'*' INDICATES THAT MANUFACTURER'S LABEL MUST BE AFFIXED STATING THAT THE SHOWN LAMP WATTAGE IS THE MAXIMUM LAMP WATTAGE THAT CAN BE USED FOR THIS FIXTURE, BASED ON LIGHTING ENERGY CODE ISSUES.

LIGHTING FIXTURE SCHEDULE — C

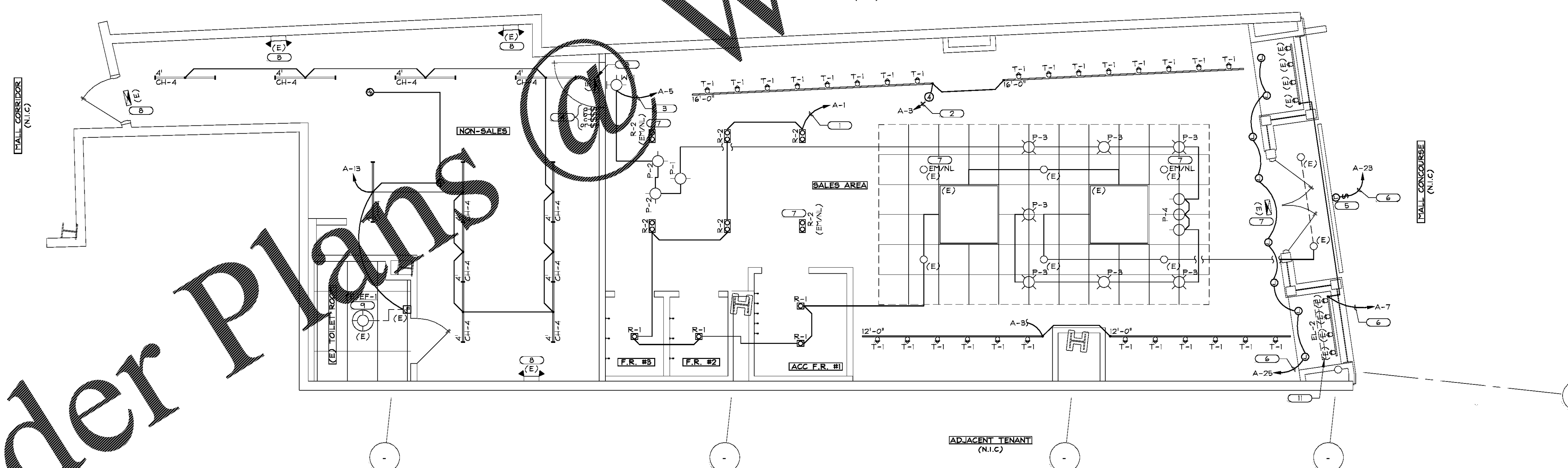

(#) # INDICATES AMP RATING OF TRACK MOUNTED CURRENT LIMITER

REFERENCE NOTE
ELECTRICAL CONTRACTOR SHALL REFERENCE CEILING PLAN AND ELEVATION SHEETS FOR ACTUAL LIGHTING LAYOUT DIMENSIONS AND MOUNTING HEIGHTS. DO NOT SCALE OFF OF THIS SHEET.

NORTH

LIGHTING PLAN — A
1/4" = 1'-0"
-

PLOTTED: 3/30/2018 3:27 PM

OWNER:
UNTUCKit
SHIRTS DESIGNED TO BE WORN UNTUCKED.
110 GREENE STREET
SUITE 400
NEW YORK, NY, 10012

ARCHITECT / ENGINEER:
SHREMSHOCK
Shremshock Architects & Engineers, Inc.
7400 W. Campus Rd. Ste. 150 New Albany, OH 43054
t: 614 545 4550 | f: 614 545 4555
North Carolina Firm
License Number: #C-3046
info@shremshock.com
www.shremshock.com

©2018 THE ARCHITECT / ENGINEER ASSUMES NO RESPONSIBILITY OR LIABILITY FOR THE USE OF THESE PLANS FOR ANY PROJECT OTHER THAN SPECIFICALLY AUTHORIZED BY THEM AND SIGNED AND SEALED FOR SUCH SPECIFIC LOCATION IN THE STATE, PROVINCE OR TERRITORY SHOWN ON THE SEAL. THIS BUILDING USE IS ONLY APPLICABLE IN AREAS MEETING THE STATED DESIGN CRITERIA

STORE NO:
-

PROJECT LOCATION:
THE STREETS AT SOUTHPOINT
6910 FAYETTEVILLE RD
SPACE#: 1140
DURHAM, NC 27713

DESIGN TYPE:
-

REVISIONS:
REQUIRED BY: DATE

* INDICATES NO REVISION TO THIS SHEET

DRAWN BY: JWH
CHECKED BY: KAH

Bid Set
TRCI
04.10.18

DRAWING TITLE:
ELECTRICAL LIGHTING PLAN & FIXTURE SCHEDULE

DATE ISSUED:
03/30/2018

PROJECT NO:
180088

DRAWING NO:
E2.0

Order Plans @ WWW.LDILine.com