SPECIFICATIONS
1. 4" inlet/outlet Sch. 40, Plain End (No-Hub)
2. Max flow rate: 100 GPM
3. Liquid capacity: 275 Gallons
4. Max grease capacity: 1,076 lbs. (147.4 Gallons)
5. Max solids/sediment capacity: 105 Gallons
6. Unit weight w/std. covers: 230 lbs.
7. Highway rated (16,000 lb. load) or Pedestrian rated (2,000 lb. load) bolted, gas/water tight composite covers (choose one).
8. Maximum operating temperature 150° continuous.
9. Seamless molded polyethylene tank.

NOTES
1. Listed by IAPMO to ASME grease interceptor standard #A112.14.3 and CSA B481.1
2. Factory installed Built-in Flow control.
3. For gravity drainage applications only. Do not use for pressure applications.
4. Seamless high density polyethylene tank.
5. Unit supplied with built-in adapter(s) for up to 6" of adjustability. Additional riser(s) available for deeper burial depth.
6. Cover placement allows full access to tank for proper maintenance.
7. Vent not required unless per local code.
8. Narrow footprint allows clearance through doorways and down stairwells.
9. Engineered inlet and outlet diffusers are removable to inspect/clean piping.
10. For on-the-floor or buried applications.
11. Integral air relief / Anti-siphon / Sampling access.
12. Three outlet options for easy rough in. Unit shipped with outlet diffuser in outlet "B".

DIFFUSION FLOW TECHNOLOGY
The inlet diffuser splits incoming effluent into two paths that utilize the entire liquid volume of the tank for efficient grease separation. The calibrated openings greatly reduce effluent turbulence. The effluent enters the main chamber without disturbing the existing grease or sediment layers.

The integral air relief / anti-siphon in the top of the outlet diffuser allows pressure stabilization within the unit during operation. The bottom of the outlet diffuser allows only effluent which is free of grease to exit the tank. It can easily be attached to any of the three outlets provided to ease jobsite piping layouts.

ENGINEER SPECIFICATION GUIDE
Schier Great Basin™ grease interceptor model # GB-250 shall be lifetime guaranteed and made in USA of seamless, rotationally-molded High Density Polyethylene. Interceptor shall be furnished for above or below grade installation. Interceptor shall be certified to ASME A112.14.3 (type C) and CSA B481.1, with field adjustable riser system, built-in flow control, built-in test caps and three outlet options. Interceptor flow rate shall be 100 GPM. Interceptor grease capacity shall be 1,076 lbs. Cover shall provide water/gas-tight seal and have minimum 2,000 lbs. load capacity.

OPTIONS:
Highway Rated cover: 16,000 lb. capacity
Pedestrian rated cover: 2,000 lb. capacity
Teleglide field adjustable risers for extending covers to grade
Male pipe thread connections
6" Plain end pipe connections (Inlet/Outlet "B" only)
High water anchor kit
Clamping collar kit

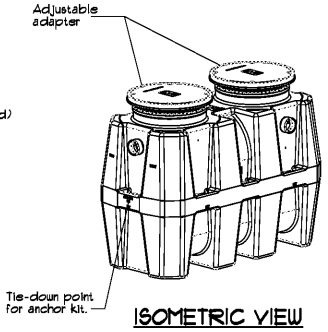

ISOMETRIC VIEW

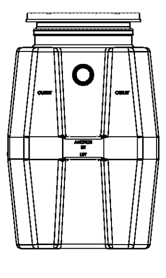

OUTLET END VIEW

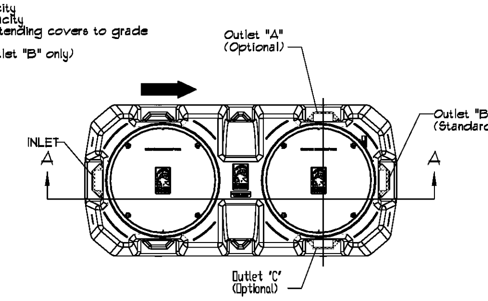

TOP VIEW

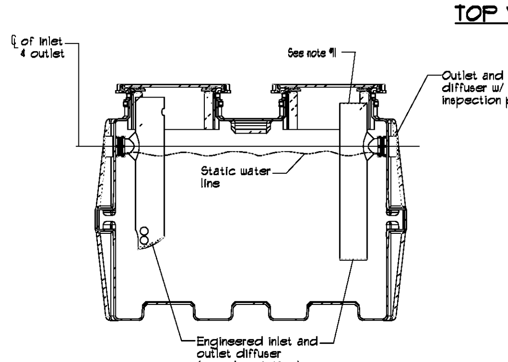

SECTION "A-A"

(1) GREASE INTERCEPTOR DETAIL
SCALE: NONE

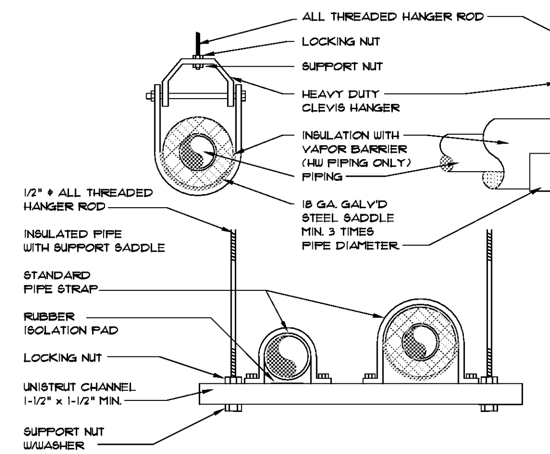

(2) PIPE HANGER DETAIL
SCALE: NONE

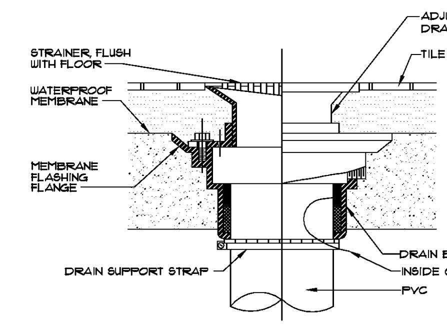

(3) FLOOR DRAIN
SCALE: NONE

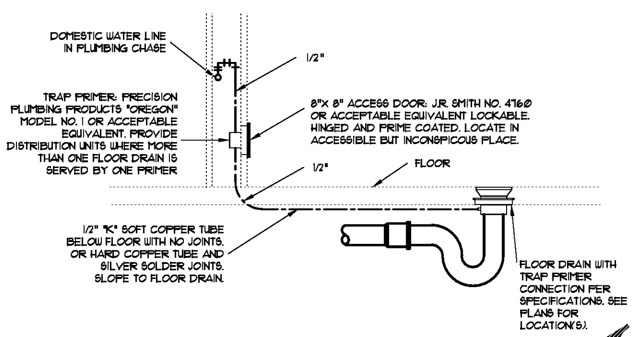

(4) TRAP PRIMER DETAIL
SCALE: NONE

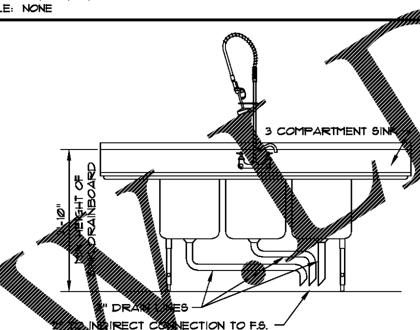

(5) 3 COMPARTMENT SINK
SCALE: NONE

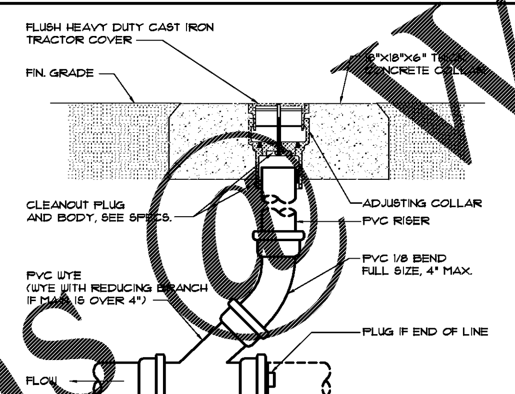

(6) GRADE CLEANOUT DETAIL
SCALE: NONE

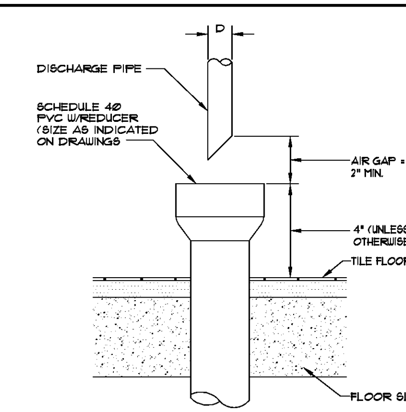

(7) HUB DRAIN
SCALE: NONE

MAIN PIPE DIA.	AIR CHAMB. DIA.
1/2"	3/4"
3/4"	1"
1"	1-1/2"
1-1/4"	1-1/2"
1-1/2"	2"
2"	2-1/2"
2-1/2"	3"

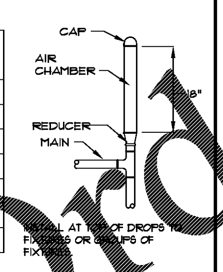

(8) AIR CHAMBER DETAIL
SCALE: NONE

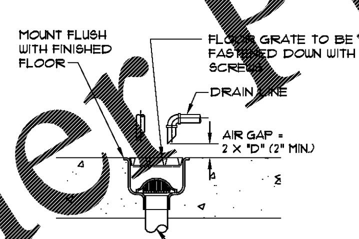

NOTE:
A. FLOOR SINK COVER FLUSH WITH TILE OR FLUSH WITH CONCRETE FLOOR IN AREA WITH NO TILE
B. FLOOR SINK TO INCLUDE A REMOVABLE STRAINER

(9) FLOOR SINK DETAILS
SCALE: NONE

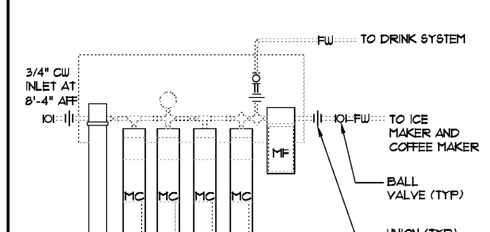

(10) WATER FILTER/SCHEMATIC HOOK - UP
SCALE: NONE

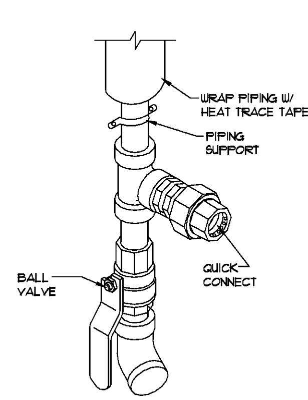

(11) GREASE RECOVERY CONNECTION
SCALE: NONE

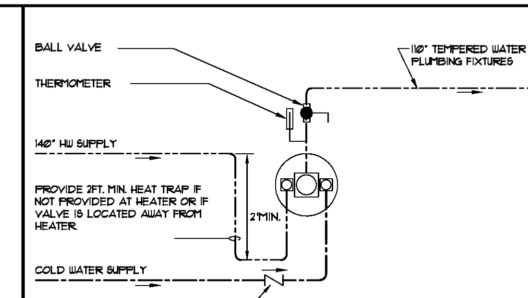

DETAIL NOTES:
1. SURFACE MOUNTED THERMOSTATIC MIXING VALVE ASSEMBLY TO BE SYMMONS SERIES 5 OR APPROVED EQUAL. 15 PSI MAXIMUM PRESSURE DROP. COORDINATE FINAL SELECTION WITH FLOW AND PRESSURE TESTS TO ENSURE PROPER OPERATION.
2. SEE PLANS FOR HW SIZES FROM WATER HEATER SYSTEM TO MIXING VALVE ASSEMBLY. REDUCE AT ASSEMBLY AS REQUIRED.
3. INSTALL PER MANUFACTURERS PUBLISHED RECOMMENDATIONS.

(12) THERMOSTATIC MIXING VALVE
SCALE: NONE

PLUMBING FIXTURE SCHEDULE

LABEL	FIXTURE	W	V	CW	HW	DESCRIPTIONS
P-1	WATER CLOSET	4"	2"	½"	-	AMERICAN STANDARD 2371.100 WHITE ELONGATED 1.6 GALLON FLUSH WATER CLOSET OLSONITE #95 WHITE SEAT, CP STOP AND SUPPLY. WITH PVC CLOSET FLANGE AND WAX SEAL.
P-1A	WATER CLOSET HANDICAPPED	4"	2"	½"	-	AMERICAN STANDARD 2371.100 WHITE ELONGATED HANDICAPPED 1.6 GALLON FLUSH WATER CLOSET OLSONITE #95 WHITE SEAT, CP STOP AND SUPPLY. WITH PVC CLOSET FLANGE AND WAX SEAL.
P-2A	LAVATORY HANDICAPPED	1½"	2"	½"	½"	RESTAURANT INTERIORS, INC. WALL HUNG WITH 4" FAUCET HOLES, 6056205 INSBROOK ACVERSION PROXIMITY FAUCET WITH POLISH CHROME FINISH, 20 GAUGE CP P-TRAP LESS CLEANOUT, CR1912-A, STOPS AND SUPPLIES. PROVIDE THERMOSTATIC MIXING VALVE TO LIMIT HOT WATER TEMPERATURE AT 110°F MAX.
P-3	URINAL HANDICAPPED	2"	2"	¾"	-	AMERICAN STANDARD 6501.010 "WASHBROOK" 1.0 GALLON FLUSH URINAL WITH SLOAN 180-1 FLUSH VALVE MOUNT AT HANDICAPPED HEIGHT.
HS	HAND SINK	1½"	2"	½"	½"	HAND SINK PROVIDED WITH KITCHEN FIXTURES REFER TO KITCHEN PLANS FOR SPECIFICATIONS PROVIDE THERMOSTATIC MIXING VALVE TO LIMIT HOT WATER TEMPERATURE AT 110°F MAX.
FD-A	FLOOR DRAIN	3"	2"	½"		PLASTIC ODDITIES PHD-822R HEAVY DUTY ADJUSTABLE DRAIN WITH 5" NICKEL STRAINER, ROUND TOP
FD-B	FLOOR DRAIN	3"	2"	½"	-	PLASTIC ODDITIES PHD-822R HEAVY DUTY ADJUSTABLE DRAIN WITH 5" NICKEL STRAINER, ROUND TOP PROVIDE WITH TRAP PRIMER CONNECTION.
FS-A	FLOOR SINK	3"	2"	-	-	PLASTIC ODDITIES PFS-300-T 3" FLOOR SINK WITH DOME TOP STRAINER AND ¾" GRATE
FS-B	FLOOR SINK	3"	2"	-	-	ZURN Z-1900-2-33 3" FLOOR, 12"x12"x6 A.R.E. SANI-FLOR RECEPTOR, ANTI SPLASH STRAINER, ACID RESISTANT PORCELAIN ENAMEL INTERIOR AND SQUARE TOP
MB	MOP BASIN	3"	2"	½"	½"	MOP BASIN PROVIDED WITH KITCHEN FIXTURES REFER TO KITCHEN PLANS FOR SPECIFICATIONS
1CS	SINGLE COMP. SINK	1½"	2"	¾"	¾"	SINK PROVIDED WITH KITCHEN FIXTURES REFER TO KITCHEN PLANS FOR SPECIFICATIONS
3CS	TRIPLE COMP. SINK	1½"	2"	¾"	¾"	SINK PROVIDED WITH KITCHEN FIXTURES REFER TO KITCHEN PLANS FOR SPECIFICATIONS
WH	WALL HYDRANT	-	-	¾"	-	WOODFORD MODEL 65, ANTI-SIPHON, AUTO DRAINING, WITH VACUUM BREAKER, FREEZE LESS WALL HYDRANT
GT	GREASE INTERCEPTOR	4"	2"	-	-	SCHIER MODEL GB250, 100 GPM, GREASE CAPACITY 1076 LBS. PROVIDE WITH CAST IRON TRAFFIC DUTY COVER.
GWH	INSTANTANEOUS GAS WATER HEATER	-	-	1"	1"	RINNAI R94LSI 199,000 BTU TANKLESS GAS WATER HEATER
HD	HUB DRAIN	3"	-	-	-	SEE DETAIL
FCO	FLOOR CLEANOUT	4"	-	-	-	PLASTIC ODDITIES PCO-700R ADJUSTABLE WITH BRONZE COVER AND METAL RING
GCO	GROUND CLEANOUT	4"	-	-	-	PLASTIC ODDITIES PGI-622R, PROVIDE WITH METAL RING
WCO	WALL CLEANOUT	3"	-	-	-	PLASTIC ODDITIES PIP SERIES, WITH WITH S/S COVER PLATE SSA-600

REFER TO KITCHEN EQUIPMENT DRAWINGS FOR PLUMBING ROUGH-IN SCHEDULE AND FOR ADDITIONAL WORK TO BE FURNISHED AND INSTALLED BY THE PLUMBING CONTRACTOR. ALL ROUGH-IN AND FINAL CONNECTIONS TO KITCHEN EQUIPMENT SHALL BE MADE BY THE PLUMBING CONTRACTOR.

ADDITIONAL NOTES:
1. LAVATORY AND SINKS SUPPLY SHALL BE BRASS W/ BRASS ANGLE STOPS FOR ½" WATER SUPPLY LINES, W/ LOOSE KEY (W/CAP), AND WALL FLANGE. ALL COMPONENTS SHALL BE POLISHED CHROME FINISH. MANUFACTURER: E.B.C., INC. OR APPROVED EQUAL.
2. CAST BODY "P" TRAP 1 1/2" x 1 1/2" WITH HEAVY CAST J-BEND & FLAT CLEANOUT PLUG, SLIP NUTS AND WALL FLANGE. ALL COMPONENTS SHALL BE POLISHED CHROME FINISH. MANUFACTURER: E.B.C., INC. OR APPROVED EQUAL.
3. STRAINERS SHALL BE FURNISHED W/FIXTURES. FOR H/C FIXTURES PROVIDE OFFSET TAILPIECE.
4. INSULATE ALL WATER AND WASTE PIPING UNDER LAVATORIES WITH HANDY-SHIELD JACKET BY PLUMBEREX: (619) 633-1712.
5. ALL PLUMBING FIXTURES & TRIM SHALL BE APPROVED BY THE OWNER BEFORE FINAL ORDER IS MADE.
6. CONTRACTOR TO PROVIDE ALL INDIRECT WASTE PIPING & TO BE FULL LINE SIZE (VERIFY SIZE WITH KITCHEN EQUIPMENT SUPPLIER).
7. ALL WATER FILTERS TO BE PROVIDED BY KITCHEN EQUIPMENT SUPPLIER. CONTRACTOR TO ROUGH-IN FOR AND MAKE FINAL CONNECTIONS.
8. CONTRACTOR TO PROVIDE VACUUM BREAKERS @ ALL KITCHEN EQUIPMENT AS REQUIRED BY LOCAL CODE AND INSTALLED AS PER MANUFACTURES RECOMMENDATIONS.
9. CONTRACTOR TO PROVIDE FULL PORT SHUT OFF VALVES AND FULL LINE SIZE REINFORCED NYLON WATER SUPPLY LINES AT REQUIRED LENGTHS FOR EACH PIECE OF EQUIPMENT UNLESS NOTED OTHERWISE.
10. CONTRACTOR TO PROVIDE WATER SUPPLY ROUGH-IN CONNECTIONS AT MOUNTING HEIGHT WHERE NOTED ON FLOOR PLAN AND FINAL EQUIPMENT SELECTION SPEC. SHEETS.
11. PLUMBER TO PROVIDE FLEXIBLE COPPER BRAIDED WATER LINES TO ALL TEA AND COFFEE BREWERS
12. CONTRACTOR TO PROVIDE PRESSURE REGULATOR & GAUGE.
13. FLOOR DRAINS SHALL BE PROVIDED WITH TRAP PRIMER CONNECTION WHERE REQUIRED. ALL PRIMERS TO HAVE SHUT OFFS "LABELED & TAGGED" AND IDENTIFIED ON FINAL "AS BUILT SET"
14. APPROVED EQUAL MANUFACTURER JOSAM, ANCON & SMITH
15. ALL KITCHEN, PREP AREA AND SALES AREA EQUIPMENT WILL BE FURNISHED AND INSTALLED. EQUIPMENT WILL BE FURNISHED WITH TRIM, FAUCETS, ESCUTCHEONS, ETC. PLUMBING CONTRACTOR SHALL PROVIDE ALL ROUGH-IN TRAPS AND MAKE ALL FINAL CONNECTIONS (SEE EQUIPMENT SCHEDULE).
16. WATER HEATER IS EXISTING FROM PREVIOUS CONSTRUCTION. SET WATER HEATER TO 140 DEG. F. PROVIDE THERMOSTATIC MIXING VALVES AT ALL FIXTURES REQUIRING 110 DEGREE HOT WATER.
17. PROVIDE 1"ø SCH 40 BLACK STL PIPE FOR GREASE DISCHARGE. RUN LINE FLUSH ON WALL BESIDE FRYERS, VERTICALLY UP IN WALL THRU CLG. SLOPE LINE @ 1"/FT TOWARDS REAR OF BUILDING. RUN LINE DOWN THRU CEILING ON FACE OF EXTERIOR WALL TO 75" AFF THEN THRU REAR WALL FOR DISCHARGE. HEAT TAPE TO BE INSTALLED ON ENTIRE LINE @ 5 WATTS/LINEAR FT. G.C. TO PROVIDE STAINLESS STEEL COVERS FOR LINE MOUNTED FLUSH ON WALLS (ENTIRE LENGTH - CEILING DOWN). REFER TO DETAIL 11/P3.

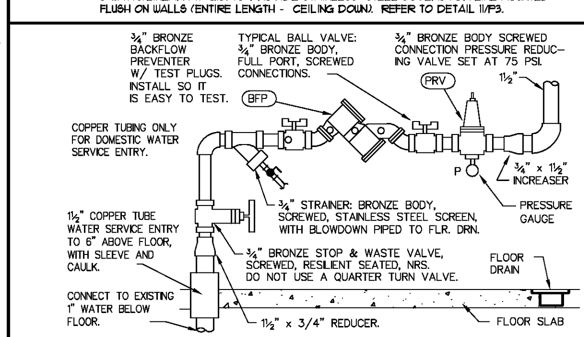

PROVIDE BACKFLOW PREVENTER OF TYPE AND MANUFACTURE APPROVED BY ALL LOCAL AUTHORITIES AND PER APPLICABLE CODES. INSTALL BACKFLOW PREVENTER IN HORIZONTAL UPRIGHT POSITION. SUPPORT ASSEMBLY FROM WALL BRACKET OR FLOOR STAND. PROVIDE REGULATOR ONLY IF PRESSURE EXCEEDS 80 PSI – VERIFY. STRAINER AND REDUCING VALVE MAY BE INSTALLED IN VERTICAL PIPE IF SPACE LIMITATIONS REQUIRE IT. CLEAN STRAINER BEFORE TURNING BUILDING OVER TO OWNER. PROVIDE ANY REQUIRED CERTIFICATION OF TEST OF BACKFLOW PREVENTER TO LOCAL AUTHORITIES.

(13) DOMESTIC WATER SERVICE ENTRY
SCALE: NONE

REVISIONS	BY

OLIVERI ARCHITECTS
AA-0002921
Member of the American Institute of Architects
32707 US Hwy. 19 • Palm Harbor, FL 34684
Phone 727 . 781 . 7525 • Fax 727 . 781 . 6623
• www.oliveriarchitects.com •

© 2017 OLIVERI ARCHITECTS. ALL INFORMATION CONTAINED IN THIS DRAWING IS THE SOLE PROPERTY OF OLIVERI ARCHITECTS. ALL RIGHTS RESERVED.

GEORGIA REGISTERED No. 24694 PROFESSIONAL ENGINEER 11-15-17 GARLAND PATTERSON

MDCI FLORIDA, INC.
405 2nd Street South • Suite B
Safety Harbor, Florida 34695
Engineering Business No. 9204
Ph. 727.698.0398 Fax 727.797.8225
© Copyright, 2017 • Project No. 17134

New Free Standing Building for
POPEYE'S
US Highway 29 & Nease Drive
Athens, Georgia

Date: 11. 07. 17
Scale: AS NOTED
Project Mgr: DG
Drawn: BMD
Job: 17-083
Sheet
P3

Order Plans @ WWW.LDILine.com