ELECTRICAL SITE PLAN SYMBOLS

SYMBOL	DESCRIPTION (UNLESS OTHERWISE NOTED ON PLANS)
T	UTILITY COMPANY TRANSFORMER, (208 VOLT, 3 PHASE, 4 WIRE SECONDARY)
$	S.P.S.T. LIGHT SWITCH (600V AC QUIET TYPE)
GF	DUPLEX RECEPTACLE GROUND FAULT CIRCUIT INTERRUPTER
	CONDUIT HOMERUN TO PANEL
J	JUNCTION BOX (SINGLE GANG STEEL WHERE WALL MOUNTED, 4" SQ. STEEL WHERE CEILING MOUNTED, UNLESS NOTED OTHERWISE)
	CONDUIT BURIED BELOW GRADE
	POLE MOUNTED SITE LIGHTING FIXTURE. CHEVRON INDICATES DIRECTION OF PRIMARY LIGHT DISTRIBUTION. ROTATE REFLECTOR AS NECESSARY.

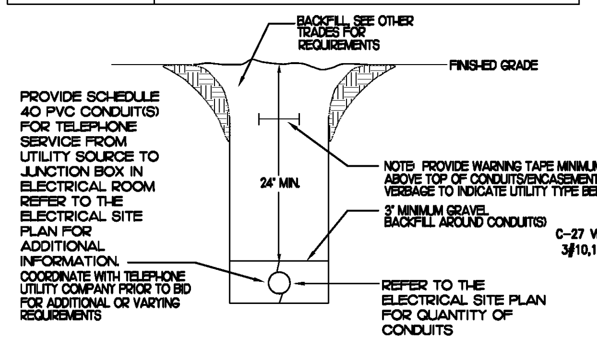

1 TELEPHONE SERVICE CONDUIT DETAIL

NOT TO SCALE

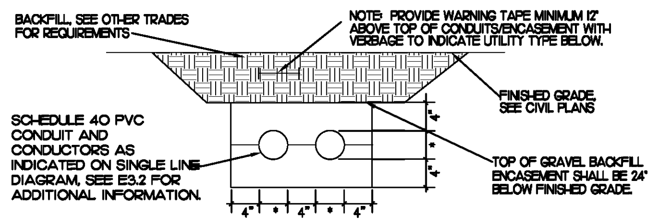

NOTE:
WHERE THE SECONDARY CONDUITS FROM THE UTILITY TRANSFORMER TO THE CURRENT TRANSFORMER CABINET (OR MAIN PANELBOARD) ARE FURNISHED BY THE UTILITY COMPANY (FOR INSTALLATION BY THE CONTRACTOR) OR ARE FURNISHED AND INSTALLED BY THE UTILITY COMPANY, THE CONTRACTOR SHALL COORDINATE ALL REQUIREMENTS WITH THE UTILITY COMPANY PRIOR TO BID. REFER TO THE ELECTRICAL SITE PLAN FOR ADDITIONAL INFORMATION.

2 ELECTRICAL SERVICE LATERAL CONDUIT DETAIL

NOT TO SCALE

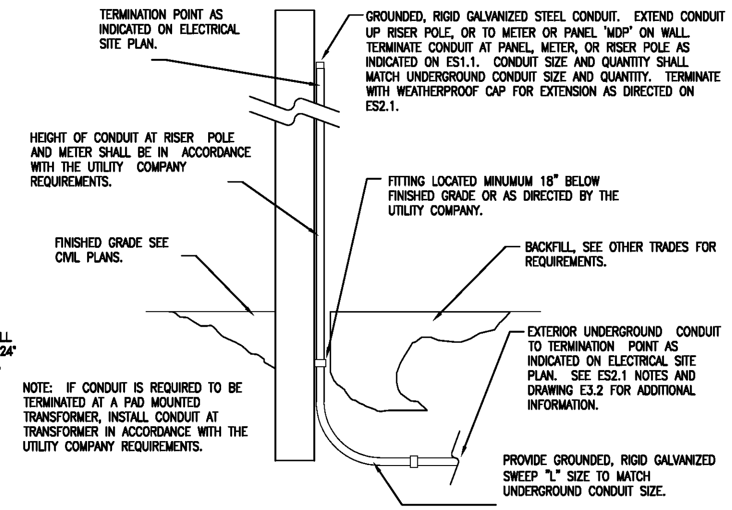

3 EXTERIOR CONDUIT TURN UP DETAIL

NO SCALE

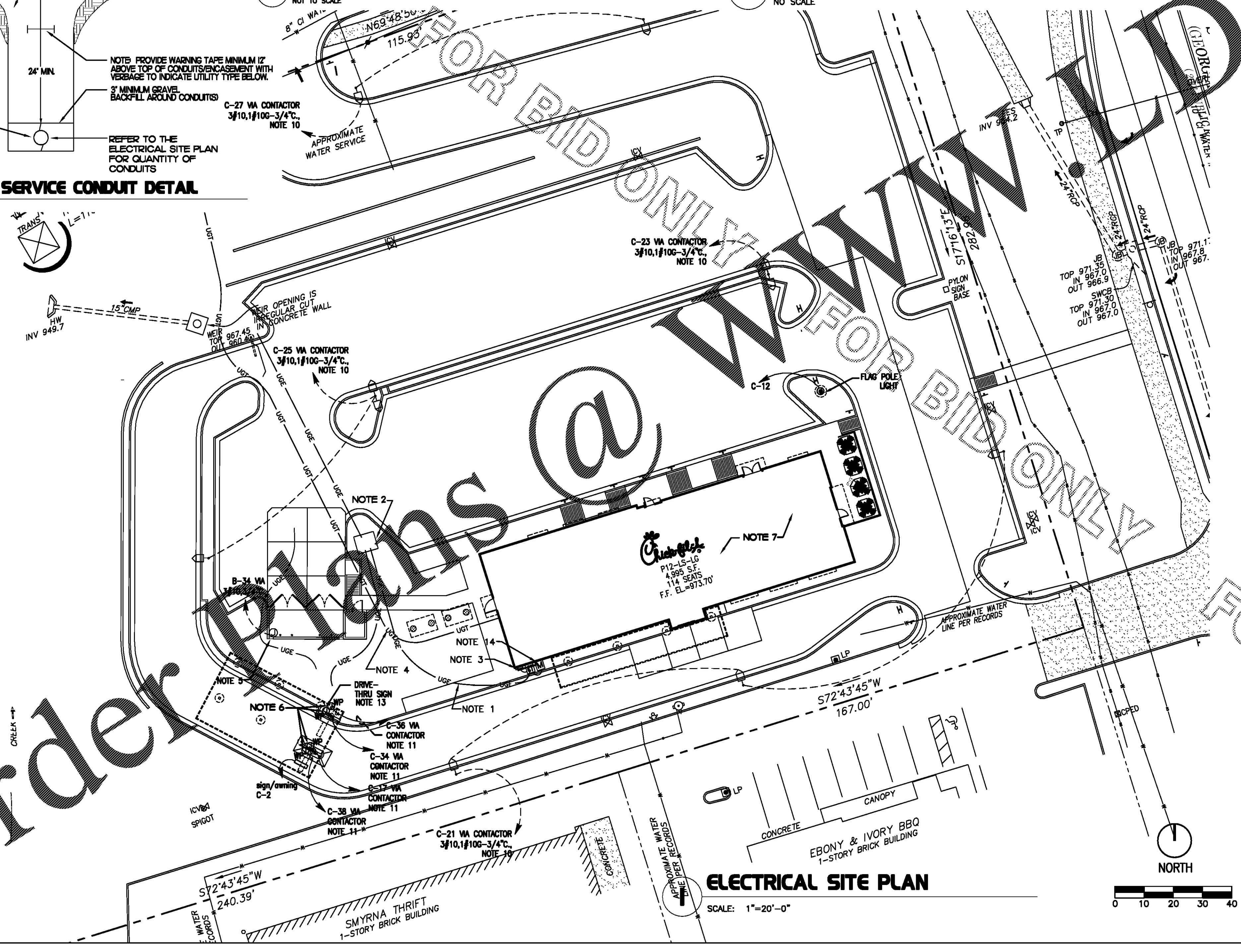

4 ELECTRICAL SITE PLAN

SCALE: 1"=20'-0"

5 ELECTRICAL SITE PLAN KEYNOTES

(APPLIES TO THE ELECTRICAL SITE PLAN SHEET ES1.1)

1. APPROXIMATE LOCATION OF PRIMARY UNDERGROUND ELECTRICAL UTILITY LINES.
2. APPROXIMATE LOCATION OF PAD MOUNTED TRANSFORMER FURNISHED BY THE ELECTRICAL UTILITY COMPANY. THE ELECTRICAL CONTRACTOR SHALL PROVIDE:
   a. PROVIDE TWO 4", SCH. 40 PVC CONDUIT TO UTILITY SOURCE, AT MINIMUM 30" BELOW FINISHED GRADE AND IN ACCORDANCE WITH UTILITY COMPANY REQUIREMENTS. COORDINATE ALL REQUIREMENTS WITH THE UTILITY COMPANY PRIOR TO BID.
   b. SECONDARY SERVICE LATERAL FROM UTILITY TRANSFORMER TO PANEL 'MDP' VIA THE CURRENT TRANSFORMER CABINET. SEE SHEET E3.2, "SINGLE-LINE DIAGRAM". REFER TO "ELECTRICAL SERVICE LATERAL CONDUIT DETAIL", THIS SHEET FOR ADDITIONAL INFORMATION.
   c. CONCRETE PAD FOR UTILITY TRANSFORMER IN ACCORDANCE WITH UTILITY COMPANY REQUIREMENTS.
   d. METERING CONDUIT. SEE NOTE 14.
3. APPROXIMATE LOCATION OF TERMINATION OF SECONDARY SERVICE LATERAL AT PANEL 'MDP'. REFER TO "SINGLE-LINE DIAGRAM", SHEET E3.2, FOR ADDITIONAL INFORMATION.
4. PROVIDE TWO 2" SCH. 40 PVC CONDUIT, MINIMUM 24" BELOW FINISHED GRADE, FOR TELEPHONE SERVICE FROM TELEPHONE UTILITY SOURCE TO JUNCTION BOX IN MECHANICAL CLOSET. REFER TO SHEET E2.2 FOR LOCATION OF JUNCTION BOX AT BRANCH PANELBOARDS. REFER TO "TELEPHONE SERVICE CONDUIT DETAIL", THIS SHEET, FOR ADDITIONAL INFORMATION. COORDINATE EXACT LOCATION OF UTILITY SOURCE WITH TELEPHONE UTILITY. TERMINATE CONDUITS AT UTILITY SOURCE AS REQUIRED BY THE UTILITY COMPANY.
5. LOCATION OF DUMPSTER. REFER TO "REFUSE ENCLOSURE PLAN - ELECTRICAL", SHEET E2.3 FOR ELECTRICAL REQUIREMENTS IN THIS AREA.
6. REFER TO SHEETS E1.3, E2.1 AND E2.2 FOR ELECTRICAL REQUIREMENTS AT MENU BOARD, DRIVE-THROUGH CANOPY, AND PRESELL MENU BOARD.
7. REFER TO SHEETS E4.1, & E4.2 FOR ELECTRICAL SPECIFICATIONS PERTAINING TO ELECTRICAL WORK DESCRIBED ON THIS SHEET.
8. REFER TO SHEET E1.1 FOR LIGHTING FIXTURE SCHEDULE.
9. PROVIDE 2" UNDERGROUND CONDUIT TO JUNCTION BOX IN OFFICE FOR POLE MOUNTED SECURITY CAMERA. REFER TO SHEET E2.2 FOR LOCATION OF JUNCTION BOX IN OFFICE AND REQUIRED SIZE OF CONDUIT. COORDINATE EXACT CAMERA LOCATION WITH CHICK-FIL-A SECURITY SYSTEM REPRESENTATIVE PRIOR TO ROUGH-IN.
10. CONNECT SITE LIGHTING CIRCUITS TO TERMINAL BLOCKS LOCATED IN THE "CFA-T500" CONTROL PANEL (TYPICAL). SEE PANEL SCHEDULES ON SHEET E3.1.
11. CONNECT SITE SIGNAGE CIRCUITS TO TERMINAL BLOCKS LOCATED IN THE "CFA-T500" CONTROL PANEL (TYPICAL). SEE PANEL SCHEDULES ON SHEET E3.1. COORDINATE LOCATIONS OF ALL SIGNS WITH CHICK-FIL-A REPRESENTATIVE PRIOR TO BID AND PRIOR TO CONDUIT INSTALLATION.
12. PROVIDE GFCI TYPE WEATHERPROOF RECEPTACLE MOUNTED ON MAIN SIGN SUPPORT +14" AFG. THIS RECEPTACLE SHALL NOT BE SWITCHED. (BYPASS THE CONTACTOR AND SIGN'S DISCONNECT SWITCH.)
13. PROVIDE WEATHERPROOF 20A SPST TOGGLE SWITCH 18" AFG AND CONNECTION TO MAINTENANCE DISCONNECT SWITCH FOR MAIN I.D. SIGN.
14. APPROXIMATE LOCATION OF BUILDING MOUNTED ELECTRICAL UTILITY METER. METER BASE WILL BE FURNISHED BY THE UTILITY COMPANY AND INSTALLED BY THE CONTRACTOR. THE CURRENT TRANSFORMER CABINET SHALL BE FURNISHED AND INSTALLED ON THE BUILDING BY THE CONTRACTOR. THE CONTRACTOR SHALL ALSO FURNISH AND INSTALL A 1-1/4" RIGID GALVANIZED CONDUIT BETWEEN METER BASE AND CURRENT TRANSFORMER CABINET. COORDINATE LOCATIONS AND REQUIREMENTS WITH ELECTRIC UTILITY COMPANY PRIOR TO BID.
15. REFER TO BUILDING DRAWING E2.2 FOR LAYOUT OF THE SERVICE YARD AREA. COORDINATE LOCATIONS OF ALL ITEMS AT THE SERVICE YARD AREA PRIOR TO ROUGH-IN OF ANY ITEMS INSTALLED ON OR NEAR THE SERVICE YARD. COORDINATE EXACT LOCATIONS OF SECURITY SYSTEM EQUIPMENT WITH CHICK-FIL-A SECURITY SYSTEM REPRESENTATIVE PRIOR TO ROUGH-IN.
16. USE NOTE 16 TO SPECIFY TYPE 'OG' FIXTURES IF PROTOTYPE 'OD' FIXTURE IS NOT ALLOWED OR WHEN CFA POLE IS NEEDED FOR CCTV CAMERA

6 GENERAL ELECTRICAL SITE PLAN NOTES

(APPLIES TO THE ELECTRICAL SITE PLAN ONLY)

1. VERIFY WITH LOCAL AUTHORITIES AND UTILITIES THAT OWNER'S SIGNS, POLES, AND THEIR APPURTENANCES ARE NOT LOCATED ON OR OVER ANY EASEMENT OR MUNICIPAL RIGHT OF WAY.
2. SITE WORK, UTILITY, AND ROADWAY INFORMATION ARE TAKEN FROM BOUNDARY AND TOPO SURVEY SITE PLANS. REFER TO C-DRAWINGS.
3. MINIMUM CONDUIT SIZE SHALL BE 3/4"C. MINIMUM CONDUCTOR SIZE SHALL BE #10AWG COPPER UNLESS OTHERWISE NOTED.
4. REFER TO BUILDING ELECTRICAL DRAWINGS FOR EXTERIOR LIGHTING CONTROL.
5. FOR WORK UNDER THIS DIVISION, ELECTRICAL CONTRACTOR SHALL PROVIDE AND INSTALL ONLY NEW AND U.L. LABELED ELECTRICAL EQUIPMENT, UNLESS INDICATED OTHERWISE BY THE CONTRACT DOCUMENTS.
6. FOR WORK UNDER THIS DIVISION, ELECTRICAL CONTRACTOR SHALL CONTACT ALL UTILITIES FOR VERIFICATION AND IDENTIFICATION OF ALL UNDERGROUND RUNS, PRIOR TO SITE TRENCHING ("CALL BEFORE YOU DIG").
7. FOR WORK UNDER THIS DIVISION, ELECTRICAL CONTRACTOR SHALL PERFORM ALL WORK IN STRICT ACCORDANCE WITH THE CURRENT EDITION OF THE NATIONAL ELECTRIC CODE (NFPA 70), AND THE LIFE SAFETY CODE (NFPA 101), AS ADOPTED AND/ OR AMENDED BY STATE AND LOCAL AUTHORITIES HAVING JURISDICTION.
8. FOR WORK UNDER THIS DIVISION, ELECTRICAL CONTRACTOR SHALL COORDINATE AND FIELD VERIFY LOCATIONS OF ALL UTILITY SERVICE RUNS, ORIGINATIONS, TERMINATIONS AND ANY INSTALLATION REQUIREMENTS (i.e. ELECTRICAL, TELEPHONE, WATER, GAS, SEWAGE, ETC.), AS RELATED TO THIS JOB, OR THEREBY EFFECTED.

Chick-fil-A
5200 Buffington Road
Atlanta, Georgia 30349-2998

INTERPLAN LLC
ARCHITECTURE
ENGINEERING
INTERIOR DESIGN
PROJECT MANAGEMENT

604 COURTLAND STREET
SUITE 100
ORLANDO, FLORIDA 32804
PH 407.645.5008
FX 407.629.9124

SEAL:
THIS DOCUMENT IS "NOT FOR CONSTRUCTION" UNLESS THE ARCHITECT OR ENGINEER'S SIGNATURE AND SEAL APPEAR BELOW.

STACY HENSON, P.E.

CHICK-FIL-A
SAR South Cobb FSR
3100 SOUTH COBB DRIVE SE.
SMYRNA, GEORGIA 30080

FSR# 0810

REVISION SCHEDULE

NO.	DATE	DESCRIPTION

CONSULTANT PROJECT #	2017.0165
PRINTED FOR	Permit
DATE	10/2017
DRAWN BY	VD
CHECKED BY	SH

Information contained on this drawing and in all digital files produced for above named project may not be reproduced in any manner without express written or verbal consent from authorized project representatives.

SHEET
ELECTRICAL SITE PLAN

SHEET NUMBER
ES-1.1

COPYRIGHT © 2017 INTERPLAN LLC RESERVES COPYRIGHT & OTHER RIGHTS RESTRICTING THESE DOCUMENTS TO THE ORIGINAL SITE OR PURPOSE FOR WHICH THEY WERE PREPARED. REPRODUCTIONS, CHANGES OR ASSIGNMENTS ARE PROHIBITED.
Order Plans @ www.LDILine.com
FOR BID ONLY