NATIONAL ACCOUNTS: SWITCHGEAR

SUPPLY and INSTALL STANDARD PACKAGE

CORPORATE AND FRANCHISE DEVELOPMENT

YUM NATIONAL ACCOUNT AGREEMENT IS WITH SQUARE-D FOR ELECTRICAL SWITCHGEAR EQUIPMENT FOR COMPANY AND FRANCHISE DEVELOPMENT. CUTLER-HAMMER ELECTRICAL SWITCHGEAR EQUIPMENT IS AN APPROVED ALTERNATE MANUFACTURER FOR FRANCHISE DEVELOPMENT ONLY.

UNDER THIS AGREEMENT, THE CONTRACTOR IS RESPONSIBLE FOR PURCHASE AND INSTALLATION OF THE SYSTEMS DESCRIBED IN THE PLANS. ALL COMPANY AND FRANCHISE PROJECTS SHALL CONTACT ACCUSERVE FOR A PRICE QUOTE AND A BILL OF MATERIAL CONFIRMATION FOR THEIR SPECIFIC PROJECT. SEE THE SWITCHGEAR SECTION IN THE SCOPE OF WORK FOR ADDITIONAL INFORMATION.

PRIMARY CONTACT: BUDDY BOCKWEG
PHONE: (877) 707-7378
FAX: (502) 961-0357
EMAIL: buddy@accuserv.com

THE SWITCHGEAR PACKAGE CONSISTS OF SERVICE ENTRANCE, SWITCHGEAR, MAIN PANELS, SUB PANELS, LIGHTING CONTACTORS AND ALL ASSOCIATED PRODUCTS TO COMPLIMENT THE SWITCHGEAR PACKAGE.

BE PREPARED AT TIME OF ORDER OR QUOTE REQUEST TO PROVIDE ALL PROJECT DETAILS REGARDING SPECIFICATIONS AND QUANTITIES AS SITE SPECIFIC DESIGN MAY NOT MATCH PROTOTYPICAL DESIGN.

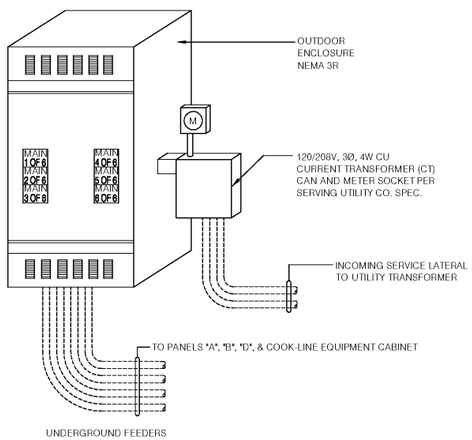

NOTE: CONFIRM DIMENSIONS WITH SUPPLIER

SERVICE ENTRANCE EQUIPMENT ELEVATION - NON-EUSERC PACKAGE | E

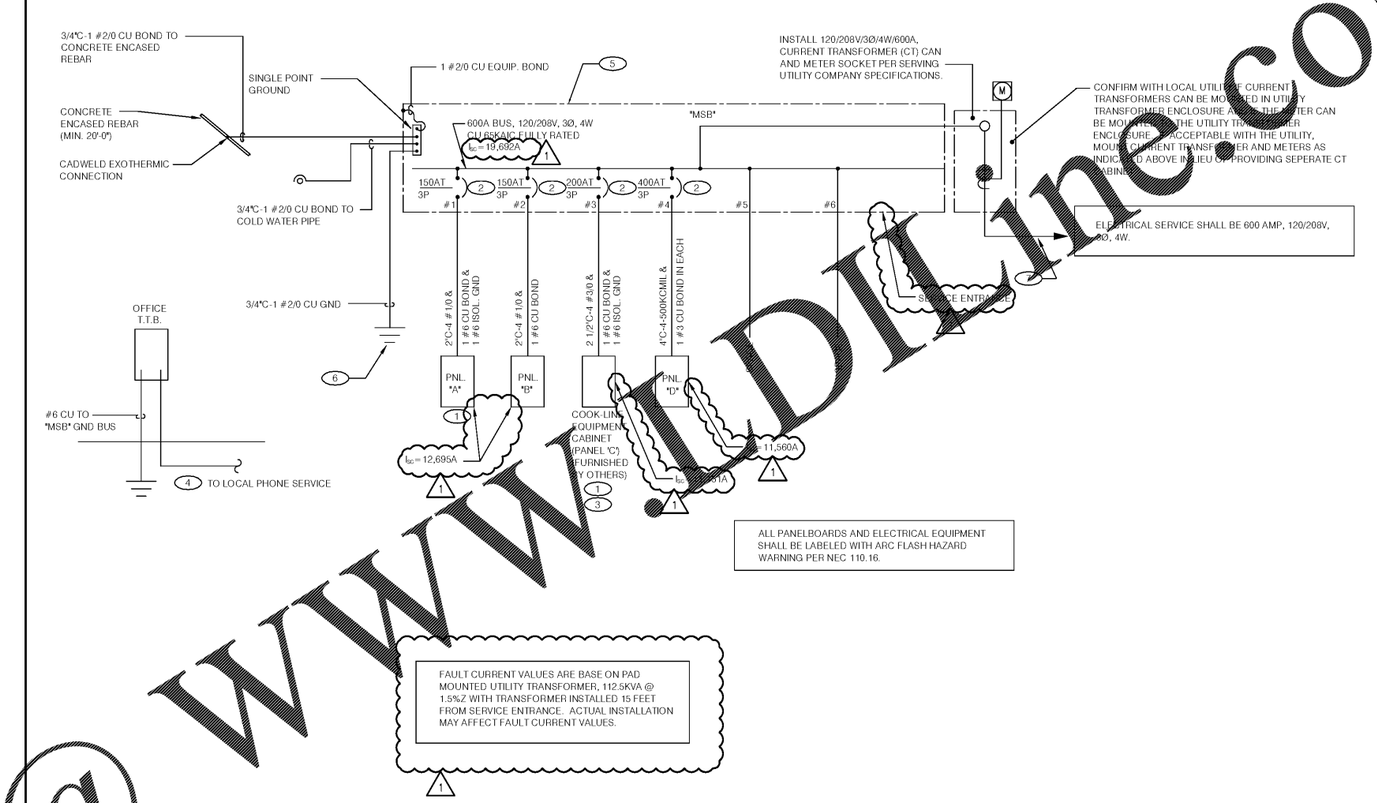

SINGLE LINE DIAGRAM | B

ELECTRICAL LEGEND | F

A. THERE SHALL BE U.L. LISTED SERIES RATING BETWEEN CKT. BREAKERS LOCATED AT THE DISTRIBUTION PANEL AND THE DOWNSTREAM 10k A.I.C. RATED CIRCUIT BREAKERS AT PANELS "A", "B" COOK-LINE EQUIPMENT CABINET BASED ON THE MAXIMUM FAULT CURRENT AS DETERMINED AT THE SERVICE ENTRANCE AND DOWNSTREAM 22K A.I.C. RATED CIRCUIT BREAKERS AT PANEL "D."

B. THE NFPA-70 'SIX SWITCH' MAXIMUM RULE SHALL APPLY TO THE POINT AT WHICH THE SERVICE ENTERS THE BUILDING AS DEFINED BY NFPA-70 (CURRENT EDITION IN FORCE AT THIS SITE). NOTIFY ENGINEER WHERE LOCAL CONDITIONS REQUIRE ALTERNATE LOCATIONS OR SINGLE POINT DISCONNECT.

C. REFER TO SCOPE OF WORK FOR DETAILS REGARDING OWNER SUPPLIED AND/OR INSTALLED PRODUCTS. GENERAL CONTRACTOR IS RESPONSIBLE FOR ALL OTHER WORK AND MATERIAL FOR THE PROJECT

D. IF UTILITY COMPANY PROPOSES A SERVICE DIFFERENT FROM THAT ILLUSTRATED, CONTACT THE ENGINEER OF RECORD FOR A DECISION BEFORE PROCEEDING. COORDINATE AVAILABLE SHORT CIRCUIT CURRENT W/ LOCAL UTILITY AND PROVIDE CIRCUIT BREAKERS W/ SUFFICIENT INTERRUPTING CAPACITY.

E. COORDINATE CT METERING COMPARTMENT SIZE WITH LOCAL UTILITY COMPANY, ELECTRICAL INSPECTOR AND THE NATIONAL ELECTRICAL CODE TO MEET ALL REQUIREMENTS BEFORE PURCHASE AND INSTALLATION. NEW METER SHALL BE BY LOCAL UTILITY COMPANY.

F. ALL WIRING SHOWN SHALL BE COPPER TYPE "THHN/THWN" EXCEPT FEEDERS FROM UTILITY TRANSFORMER TO SWITCH BOARD MAY BE ALUMINUM.

G. MC CABLE ACCEPTABLE FOR ALL APPLICATIONS WHERE ALLOWED BY LOCAL CODES. ALL CONDUIT MUST BE CONCEALED U.N.O.

H. UNLESS NOTED OTHERWISE, BRANCH CIRCUIT WIRING SHALL CONSIST OF 2# 12, 1# 12G; 3"C.

I. DESIGN AND INSTALLATION TO COMPLY WITH 2014 NEC:

LISTING AND LABELING
ALL ELECTRICAL MATERIALS, DEVICES, APPLIANCES, AND EQUIPMENT SHALL BE LABEL LISTED BY A NORTH CAROLINA APPROVED THIRD PARTY TESTING AGENCY (MECKLENBURG COUNTY CODE ENFORCEMENT)

1

GENERAL NOTES | D

1. CONNECT ISOLATED GROUND TO ISOLATED GROUND BUS IN PANEL AND LAND ISOLATED GROUND TO SINGLE POINT GROUND. DO NOT COMBINE COMMON GND TO ISOLATED GROUND.

2. 6 BUILDING MAIN DISCONNECT FOR THIS SERVICE:
(MAXIMUM 6 MAINS PER N.E.C)
LABEL EACH MAIN BREAKER AS INDICATED: "MAIN 1 OF 6" (ENGRAVED LETTERS x 3/4" HIGH)
"MAIN 2 OF 6"
"MAIN 3 OF 6"
"MAIN 4 OF 6"
"MAIN 5 OF 6"
"MAIN 6 OF 6"

3. EQUIPMENT CABINET IS FURNISHED WITH COOK LINE.

4. PROVIDE 2" CONDUIT STUBBED INTO BUILDING FROM UTILITY DEMARC FOR TELEPHONE.

5. VERIFY AVAILABLE FAULT CURRENT AT SERVICE ENTRANCE WITH THE UTILITY CO. AND CONFIRM 65 KAIC RATING IS SUFFICIENT.

6. (3) 5/8" DIA. x 10'-0" COPPER CLAD GROUND RODS. INSTALL 12'-0" APART AND CONNECT GROUND SYSTEM PER N.E.C ARTICLE 250.

7. INSTALL UNDERGROUND SERVICE LATERAL TO UTILITY TRANSFORMER PER SERVING UTILITY COMPANY SPECIFICATIONS. 4-350kcmil IN EACH OF (2)4"C. TO PAD MOUNT TRANSFORMER. GC / ELECT. CONTRACTOR SHALL COORDINATE SERVICE POLES PER LOCAL UTILITY CODE. IF ALUMINUM CONDUCTORS ARE USED PROVIDE 4-500kcmil IN EACH (2) 4"C.

KEY NOTES | C

Order Plans @ www.DIY-Plans.com

GLAVY ARCHITECTURE, PLLC
1525 E. Douglas Wichita, KS 67211
Tel: (316) 262-5207 / Fax: (316) 262-5846
www.glavy.com

DEVITA
ATLANTA • CHARLOTTE • GREENVILLE • RICHMOND
877.4.DEVITA • corp@devitainc.com
DeVita & Associates, Inc. Project: 17002-22
Drawn By: RAG Checked By: RAG
NC Firm License # C-0819

12144.400

1	ELECTRICAL COMMENTS 11/17/2017

CONTRACT DATE:	10.2.17
BUILDING TYPE:	EXP. LITE MED40
PLAN VERSION:	DECEMBER 2016
SITE NUMBER:	311687
STORE NUMBER:	436563

TACO BELL

3923 SHAKEDOWN ST.
CHARLOTTE, NC

EXPLORER LITE
MEDIUM54

RISER DIAGRAM AND LEGEND

NON-EUSERC

E2.0