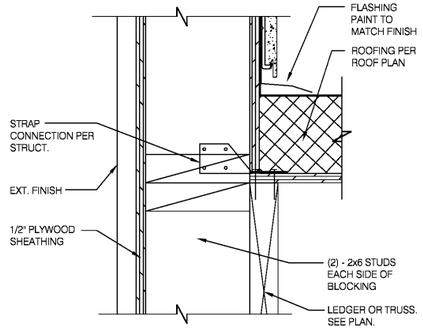

CON. @ STUD AND @ BLOCKING 3" = 1'-0" | **17**

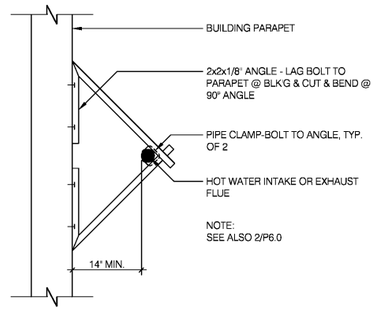

W.H. FLU / INTAKE PIPE SUPPORT N.T.S. | **13**

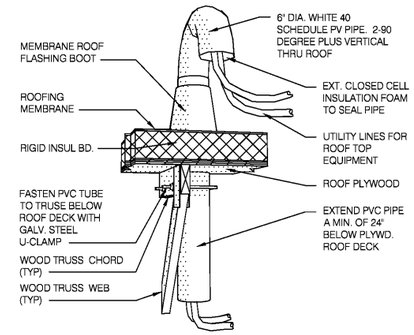

PIPE HOOD N.T.S. | **9**

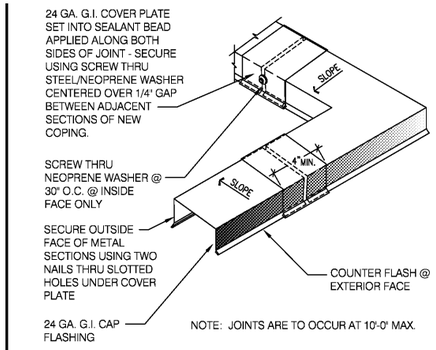

COPING JOINT N.T.S. | **5**

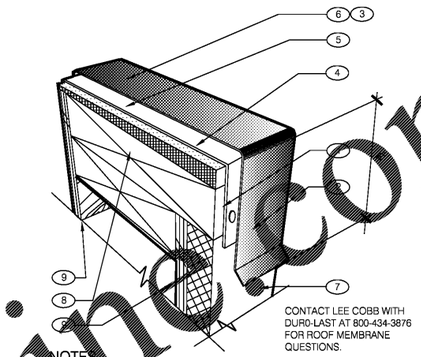

NOTES

1. PROVIDE A WOOD NAILER TO MATCH THE THICKNESS OF THE WALL FINISH. APRROX. 1" THICK IS TYPICAL BUT MAY VARY. TOP OF WOOD NAILER SHALL BE FLUSH WITH TOP OF WALL FINISH. THE WOOD NAILER SHALL EXTEND AT LEAST 1/2" INCH BEYOND THE LOWER HORIZONTAL EDGE OF THE PARAPET COPING TO ALLOW FOR PROPER FASTENING.
2. FASTENERS USED TO ATTACH THE COPING TO WOOD NAILERS, MUST BE SPACED NO GREATER THAN 18 - INCHES ON-CENTER.
3. ALLOW FOR 1/8 - INCH EXPANSION GAP BETWEEN 10-FOOT LENGTHS OF COPING. PROVIDE A COPING JOINT COVERS BETWEEN ENDS OF COPING PIECES AND AT CORNERS. JOINT COVERS SHOULD BE MADE FROM THE SAME MATERIAL AS THE COPING AND SHOULD LAP THE JOINTS A MINIMUM OF 6" ON EITHER SIDE. JOINT COVERS SHALL BE FASTENED THE SAME WAY AS THE COPING.
4. PRESSURE TREAT PLYWOOD SLOPED 1/4:12 TOWARDS ROOF..
5. ROOF MEMBRANE WRAPPED OVER PARAPET UNDER COPING CAP.
6. FACTORY PAINTED 24 GAUGE METAL COPING WITH 4" DROP FRONT, BACK AND ENDS (WHERE SHOWN).
7. WALL FINISH: 1-1/2" THICK E.I.F.S.
8. DOUBLE 2X TOP PLATE
9. PLYWOOD SUBSTRATE. SEE SHEET A1.0 & S2.0 FOR ADDITIONAL DETAILS

PARAPET CAP N.T.S. | **2**

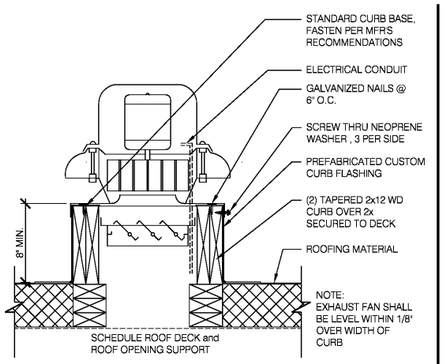

EXHAUST FAN CURB 1-1/2" = 1'-0" | **18**

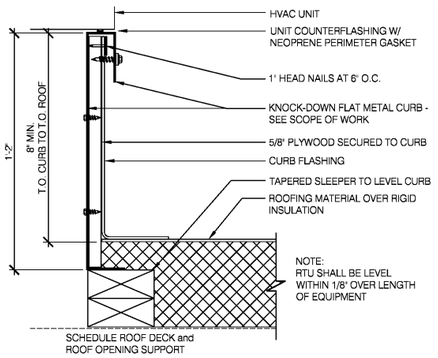

HVAC CURB 3"=1'-0" | **14**

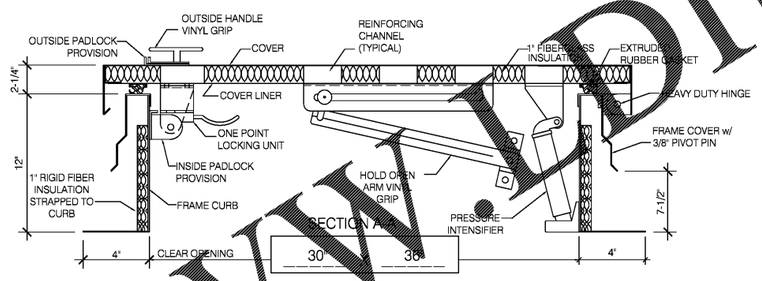

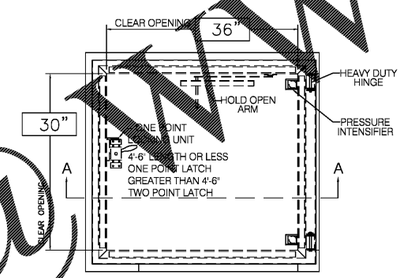

HATCH MATERIAL:

GALVANIZED STEEL (PRIME PAINTED)
COVER - 14 GA. GALV STEEL
FRAME COVER - 14 GA. GALV STEEL
FRAME CURB - 14 GA. GALV STEEL
COVER LINER - 22 GA. GALV STEEL

HATCH FINISH:

GALV - PRIME PAINTED

MANUFACTURER:

PRECISION LADDERS, LLC OR EQUAL

NOTES:

(1) ALL MOUNTING HARDWARE TO BE SUPPLIED BY OTHERS.
(2) FOR OPERATING EFFICIENCY, HATCH HARDWARE VARIES BY SIZE.

EXAMPLE MODEL#: PH- A/G OPENING SIZE IN FEET-INCHES (PH-G2630)

ROOF LADDER AND HATCH 1"=1'-0" | **7**

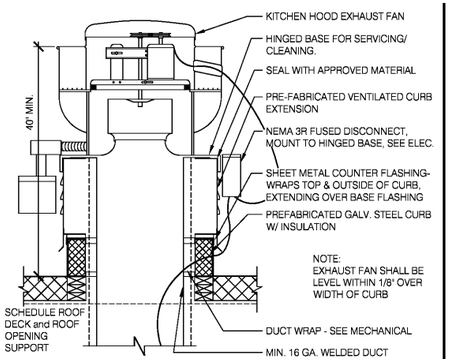

EXHAUST FAN CURB N.T.S. | **19**

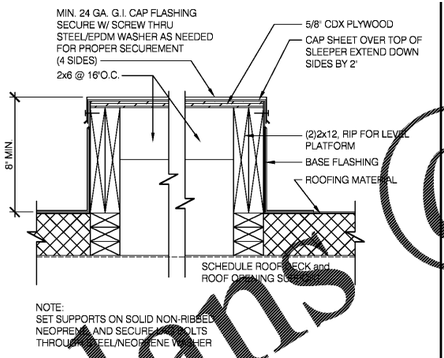

EQUIPMENT PLATFORM SUPPORT 1-1/2"=1'-0" | **15**

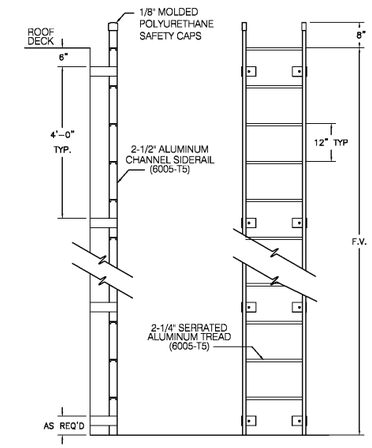

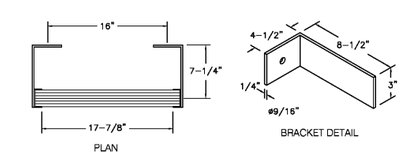

ROOF LADDER N.T.S. | **4**

NOT USED | **20**

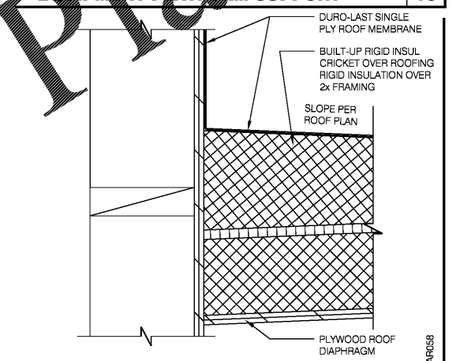

CRICKET 3"=1'-0" | **16**

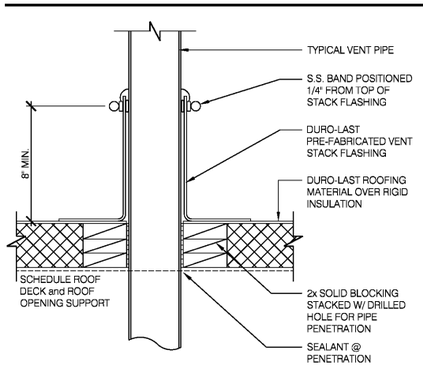

SEALED PIPE FLASHING 1 1/2"=1'-0" | **12**

NOT USED N.T.C. | **8**

GLMV ARCHITECTURE, PLLC
1525 E. Douglas Wichita, KS 67211
Tel: (316) 265-5387 Fax: (316) 265-5846
www.glmv.com

GLMV ARCHITECTURE, PLLC
53127
WICHITA, KS

MARK D. MOLLENHAUER
17023
WICHITA, KS
10/23/17

12144.400

CONTRACT DATE:	10.23.17
BUILDING TYPE:	EXP. LITE MED40
PLAN VERSION:	DECEMBER 2016
SITE NUMBER:	311687
STORE NUMBER:	436563

TACO BELL

3923 SHAKEDOWN ST.
CHARLOTTE, NC

EXPLORER LITE
MEDIUM54

CONSTRUCTION DETAILS ROOF

A6.0

Order Plans@TWDII.net