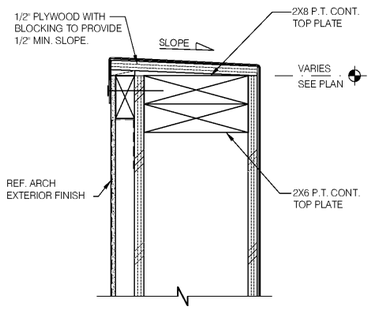

TYPICAL PARAPET CAP N.T.S. | 17

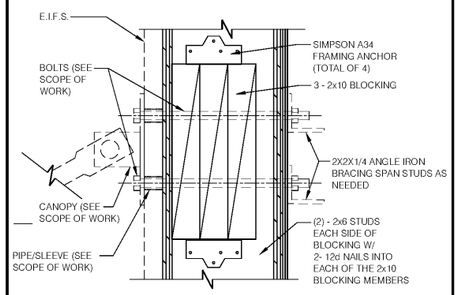

CANOPY BLOCKING N.T.S. | 13

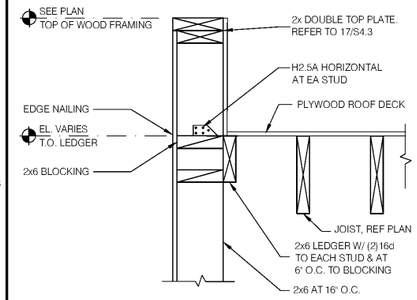

SECTION AT COOLER SIDES NONE | 9

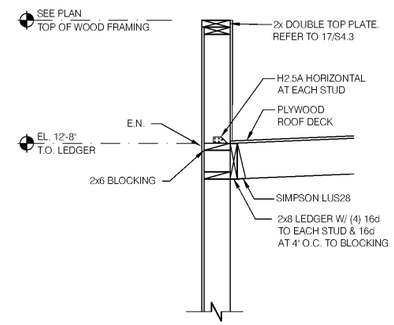

SECTION AT COOLER REAR NONE | 5

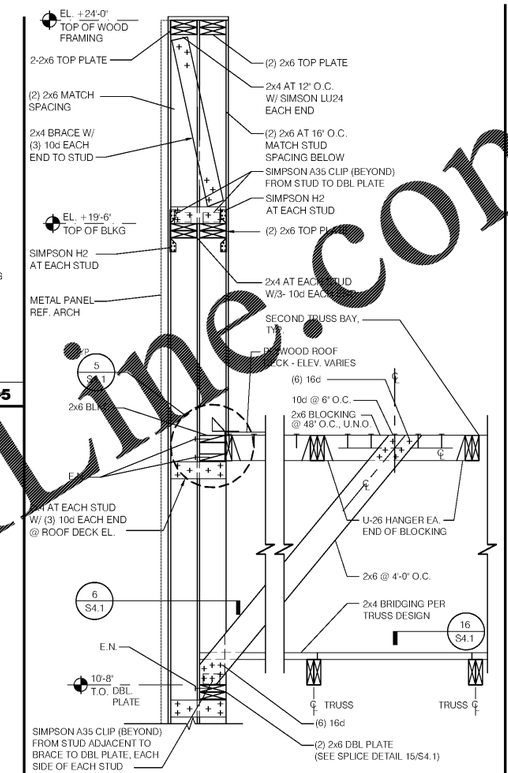

TOWER WALL 3/4" = 1'-0" | 2

NOT USED N.T.S. | 18

NOT USED N.T.S. | 14

NOT USED N.T.S. | 10

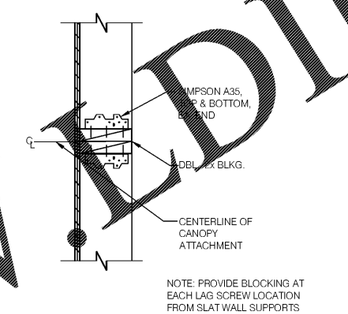

SLAT WALL BLOCKING 1-1/2" = 1'-0" | 6

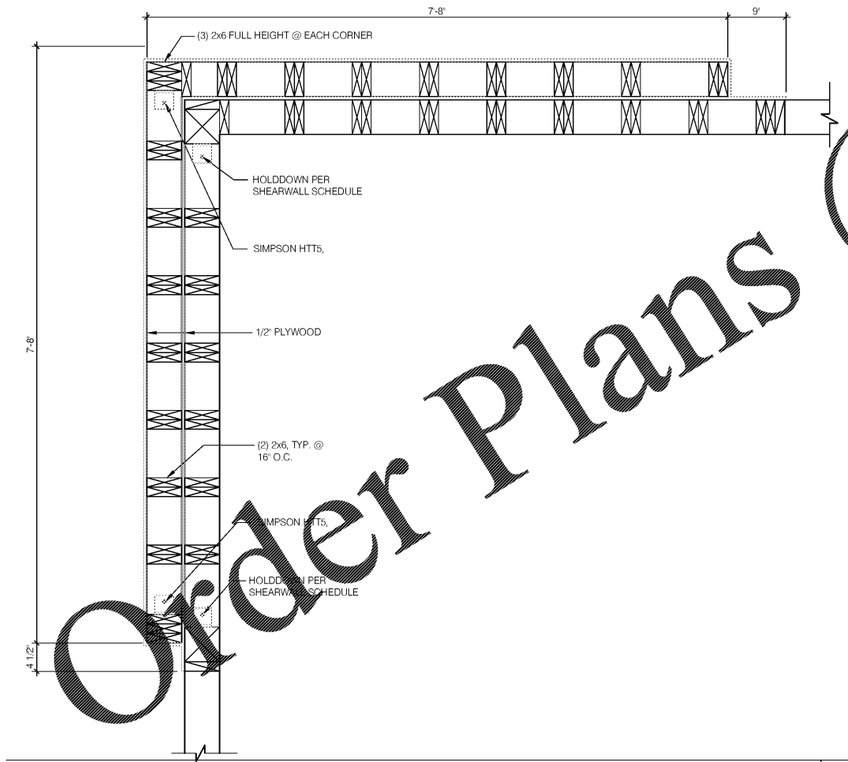

FRONT TOWER FRAMING 1/2" = 1'-0" | 16

NOT USED N.T.S. | 12

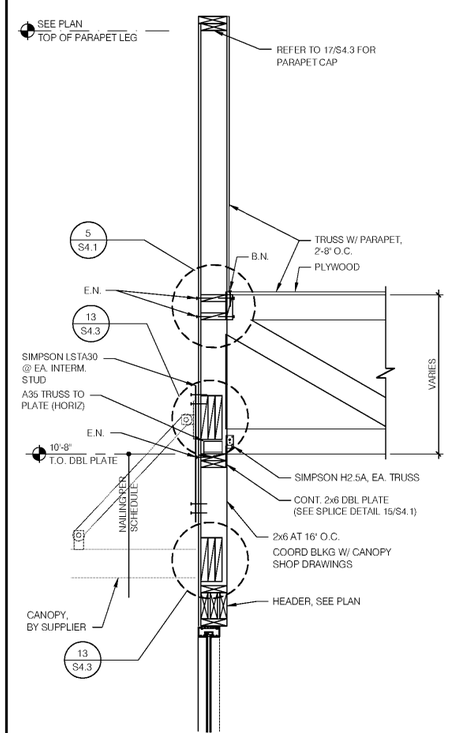

D/T WALL SECTION 3/4" = 1'-0" | 8

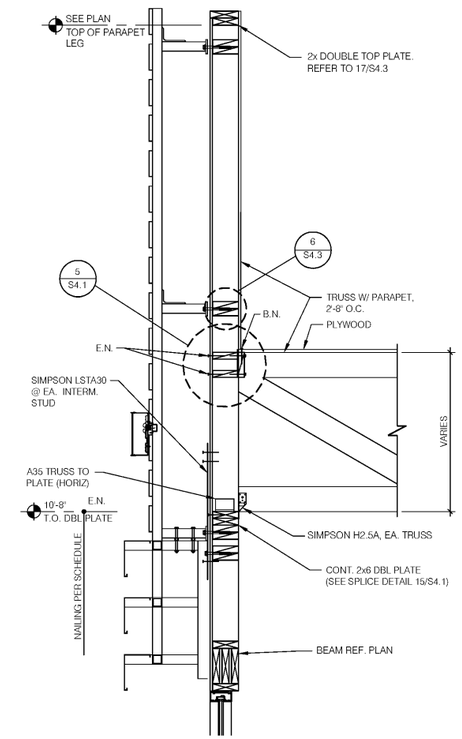

SIDEWALL AT DINING 3/4" = 1'-0" | 4

BRITT PETERS AND ASSOCIATES INC
consulting engineers
101 Falls Park Drive
Suite 601
Greenville, SC 29601
(864) 271-8869
Fax (864) 233-5140
www.brittpeters.com

NC CERTIFICATE OF LICENSURE: C-1088

GLMV Architecture
1535 E. Douglas
Wichita, KS 67211
Tel: (316) 265-9387 Fax: (316) 265-5646
www.glmv.com

NORTH CAROLINA PROFESSIONAL SEAL 27245 ENGINEER CLAYTON McDONALD 10/23/17

12144.400

CONTRACT DATE:	10.23.17
BUILDING TYPE:	EXP. LITE MED40
PLAN VERSION:	DECEMBER 2016
SITE NUMBER:	311687
STORE NUMBER:	436563

TACO BELL

3923 SHAKEDOWN ST.
CHARLOTTE, NC

TACO BELL

EXPLORER LITE
MEDIUMS4

STRUCTURAL DETAILS

S4.3

PLOT DATE:

Order Plans @ www.EDLine.com