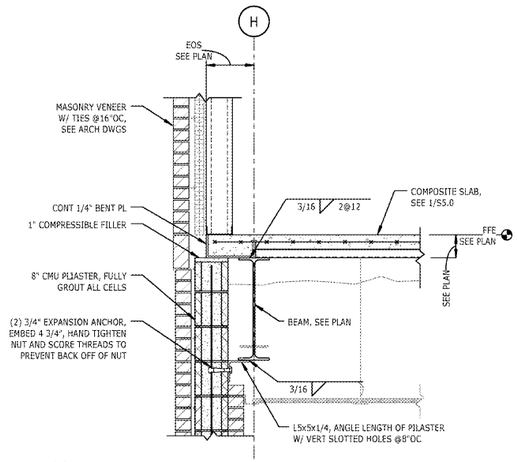

10 SECTION
S5.3 3/4" = 1'-0"

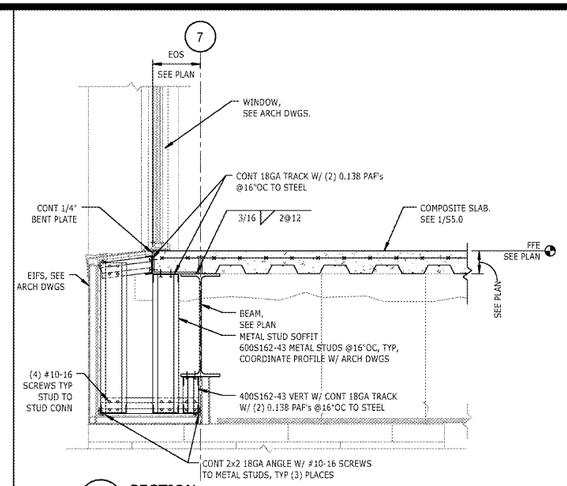

7 SECTION
S5.3 3/4" = 1'-0"

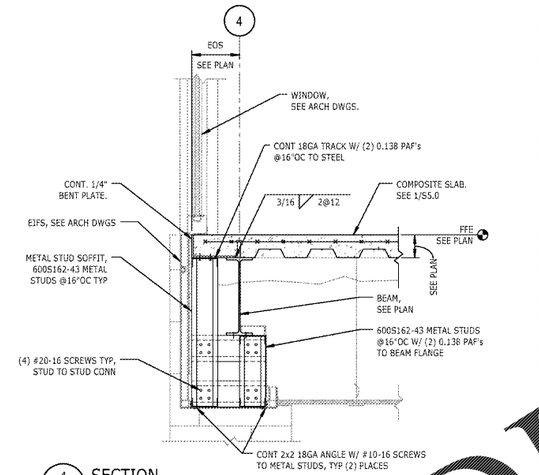

4 SECTION
S5.3 3/4" = 1'-0"

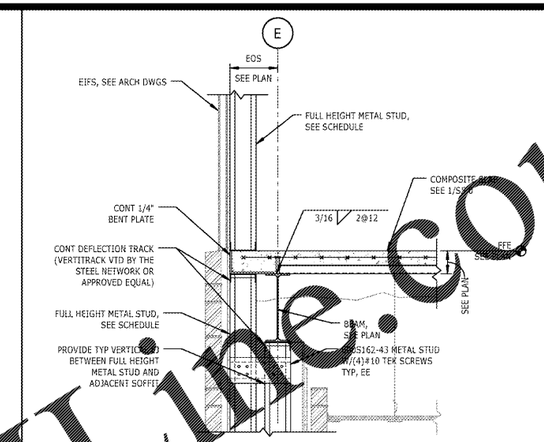

1 SECTION
S5.3 3/4" = 1'-0"

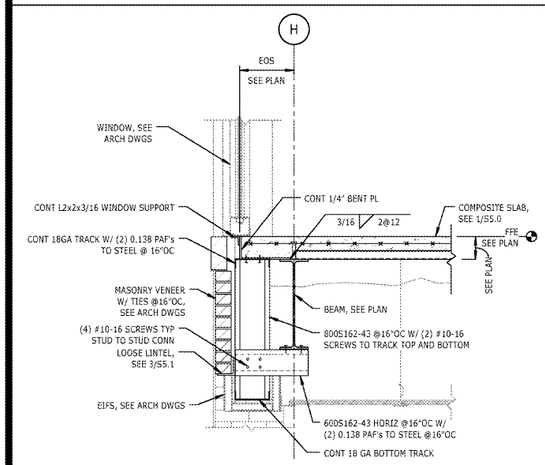

11 SECTION
S5.3 3/4" = 1'-0"

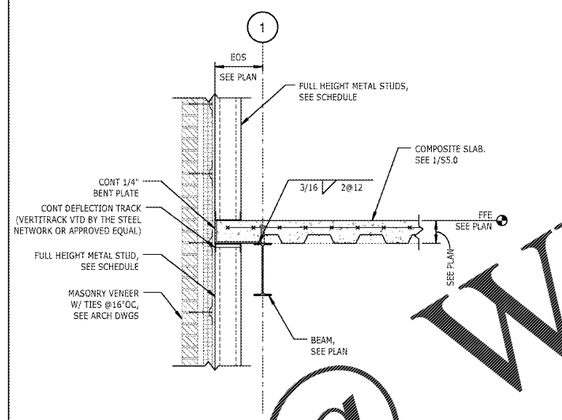

8 SECTION
S5.3 3/4" = 1'-0"

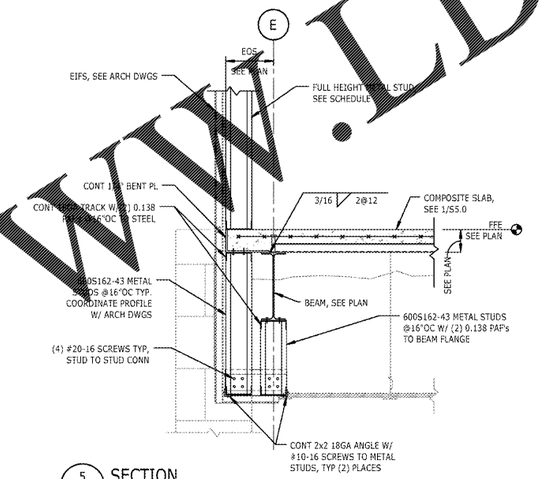

5 SECTION
S5.3 3/4" = 1'-0"

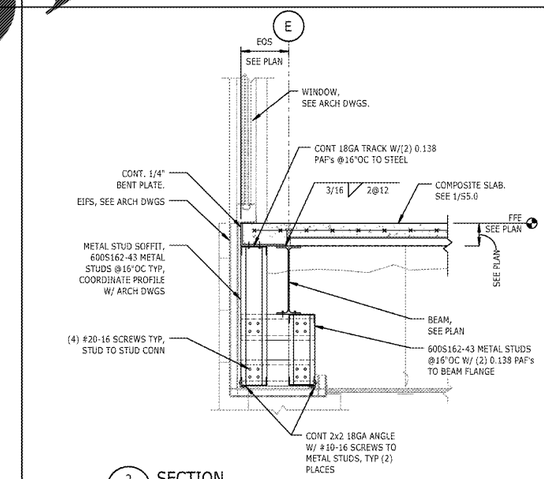

2 SECTION
S5.3 3/4" = 1'-0"

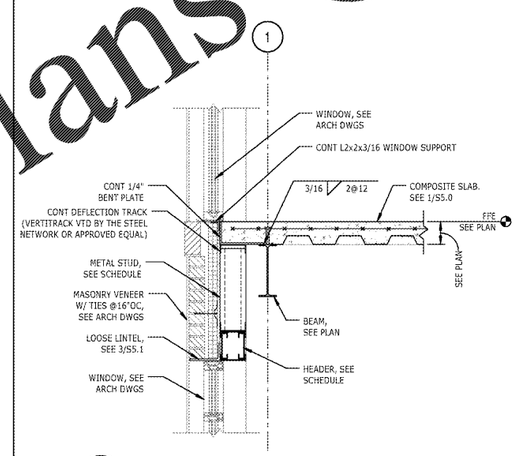

9 SECTION
S5.3 3/4" = 1'-0"

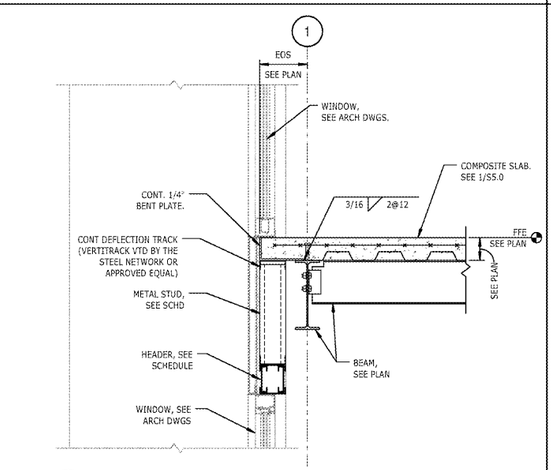

6 SECTION
S5.3 3/4" = 1'-0"

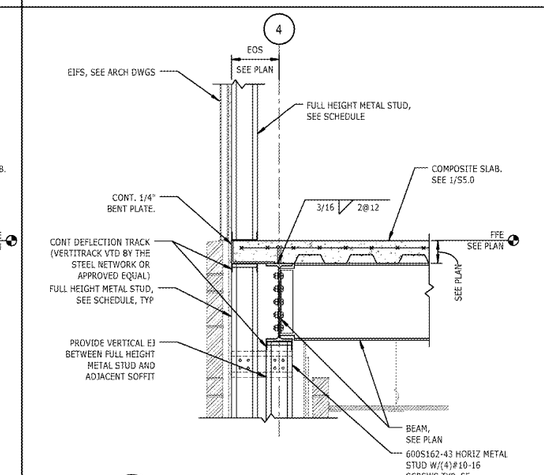

3 SECTION
S5.3 3/4" = 1'-0"

Order Plans @ WWW.LDILine.com

FINLEY DESIGN ARCHITECTURE + INTERIORS
Finley Design PA
7806 nc hwy 751
Suite 110
Durham, NC 27713
919-493-8200
FINLEYDESIGNARCH.COM

STEWART
422 FAYETTEVILLE ST. SUITE 400 RALEIGH, NC 27601
T 919.380.5700 FIRM LICENSE #C-1051 PROJECT #S16038.00

NORTH CAROLINA PROFESSIONAL ENGINEER SEAL 036153 JAMES THOMPSON
04/06/2017

Westpoint 2 Durham, NC

REVISIONS

PROJECT:	S16038.00
DATE:	04/06/2017
DRAWN BY:	DR
CHECKED BY:	DJT

FLOOR FRAMING SECTIONS AND DETAILS

S5.3

/VOLUMES/F DRIVE/FINLEY DESIGN/PROJECTS/1342 WESTPOINT 2/DRAWINGS/TITLEBLOCKS/1342-X-TB.DWG