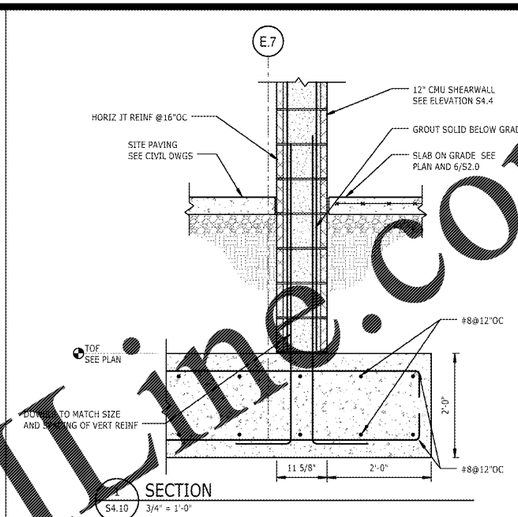

1 SECTION
S4.10 3/4" = 1'-0"

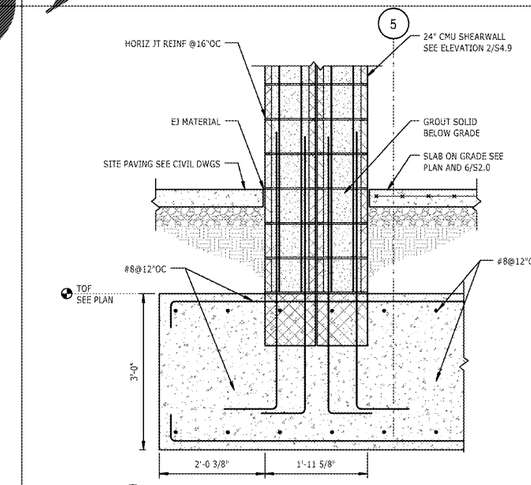

2 SECTION
S4.10 3/4" = 1'-0"

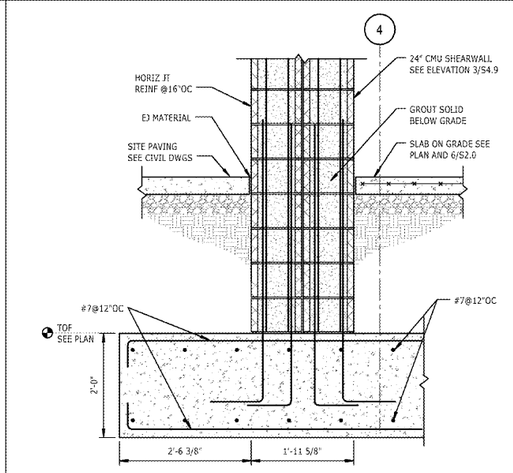

3 SECTION
S4.10 3/4" = 1'-0"

FINLEY DESIGN
ARCHITECTURE + INTERIORS

Finley Design PA
7806 nc hwy 751
Suite 110
Durham, NC 27713
919-493-8200
FINLEYDESIGNARCH.COM

STEWART
432 FAYETTEVILLE ST.
SUITE 400
RALEIGH, NC 27601
T 919 380 9700
FIRM LICENSE #C-1051
PROJECT #S16038.00

NORTH CAROLINA PROFESSIONAL SEAL 036152 ENGINEER DIANE THOMPSON
04/06/2017

Westpoint 2 Durham, NC

REVISIONS

PROJECT: S16038.00
DATE: 04/06/2017
DRAWN BY: DR
CHECKED BY: DJT

CMU SHEAR WALL SECTIONS AND DETAILS

S4.10

Order Plans @ www.LDILine.com

/VOLUMES/F DRIVE/FINLEY DESIGN/PROJECTS/1342 WESTPOINT 2/DRAWINGS/TITLEBLOCKS/1342-X-TB.DWG