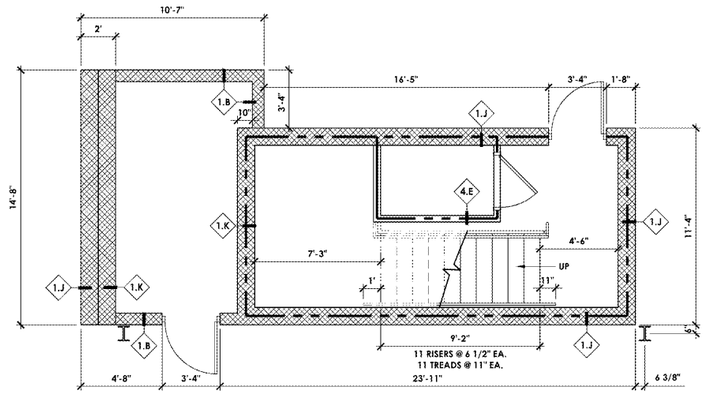


1 GROUND FLOOR
Scale: 1/4" = 1'-0"

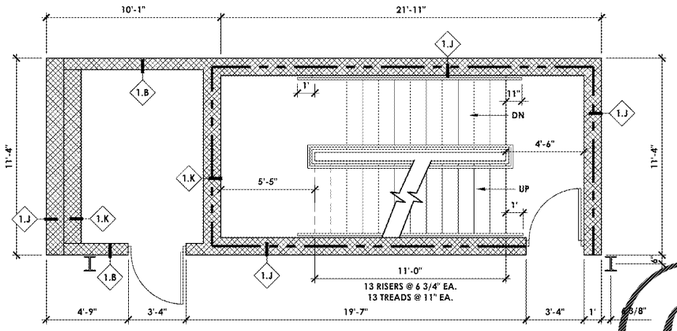


2 FIRST FLOOR
Scale: 1/4" = 1'-0"

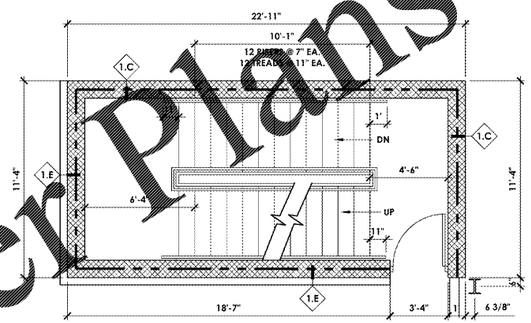


3 SECOND FLOOR
Scale: 1/4" = 1'-0"

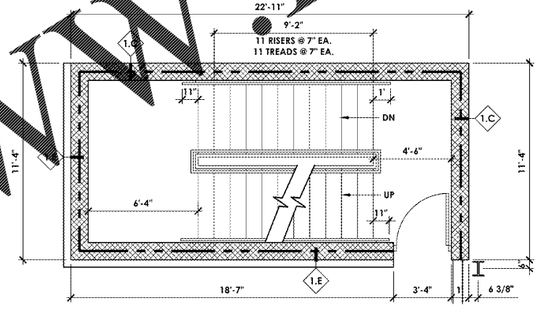


4 THIRD FLOOR
Scale: 1/4" = 1'-0"

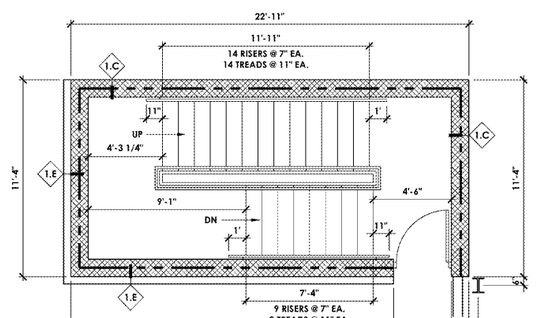


5 FOURTH FLOOR
Scale: 1/4" = 1'-0"

## SYMBOL LEGEND

| | |
|---|---|
| 2.A | WALL TYPE KEY |
| 01 | EQUIPMENT KEY |
| 8 | WINDOW KEY |
| 02 | DOOR TYPE KEY |
| 00 A9.00 | WALL SECTION KEY |
| 00 A9.00 | EXTERIOR ELEVATION KEY |
| 00 A9.00 | PLAN DETAIL KEY |

FINLEY DESIGN
ARCHITECTURE INTERIORS

FINLEY DESIGN PA
7806 NC HWY 751
SUITE 110
DURHAM, NC 27713
919-493-8200
FINLEYDESIGNARCH.COM

HARRY GRAY FINLEY
REGISTERED ARCHITECT
9629
4-6-17
DURHAM, N.C.

FINLEY DESIGN, P.A.
51513
DURHAM, N.C.

# WESTPOINT 2
DURHAM, NC

REVISIONS

PROJECT: 1342
DATE: 04/06/17
DRAWN BY: JHB
CHECKED BY: JDL

STAIR SECTION & DETAILS
A7.3

Order Plans @ WWW.LDILine.com

/VOLUMES/F DRIVE/FINLEY DESIGN/PROJECTS/1342 WESTPOINT 2/DRAWINGS/1342_STAIR AND ELEVATOR DETAILS.DWG