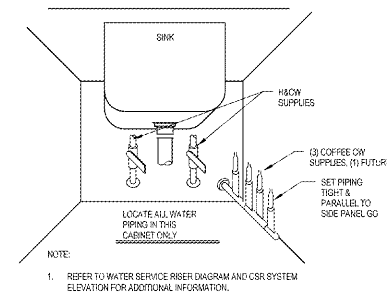

1 COFFEE BREWER MANIFOLD
P5 NOT TO SCALE

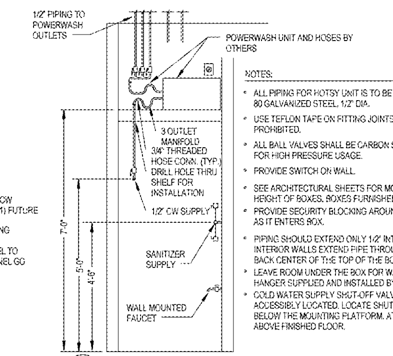

2 POWER WASH PIPING DETAIL
P5 NOT TO SCALE

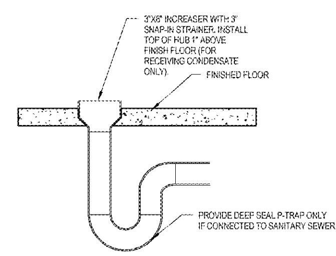

3 HUB DRAIN DETAIL
P5 NOT TO SCALE

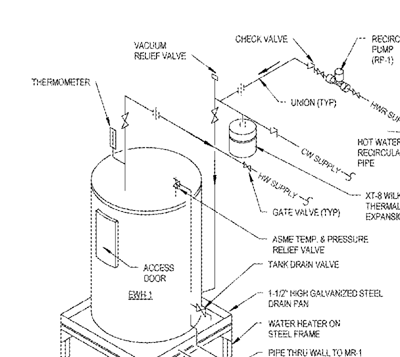

4 WATER HEATER DETAIL
P5 NOT TO SCALE

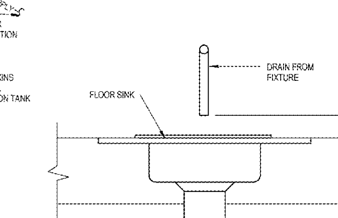

5 FLOOR SINK DETAIL
P5 NOT TO SCALE

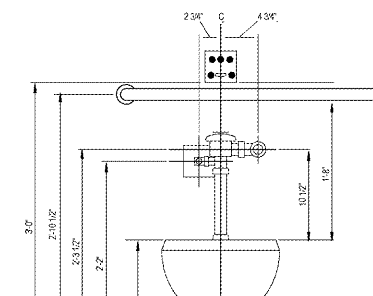

6 TOILET FLUSH VALVE SENSOR MOUNTING
P5 NOT TO SCALE

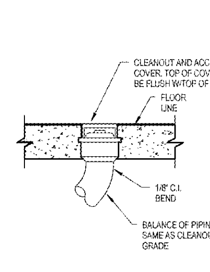

7 FLOOR CLEANOUT DETAIL
P5 NOT TO SCALE

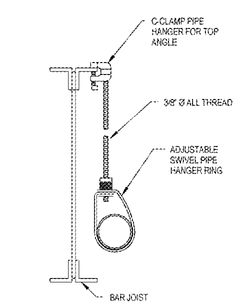

8 PIPE HANGER DETAIL
P5 NOT TO SCALE

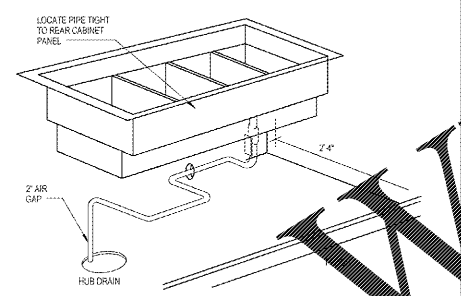

NOTE: PROVIDE UNIONS IN INDIRECT WASTE PIPING TO ALLOW FOR REFRIGERATION EQUIPMENT REMOVAL. PIPE IW SEPARATELY FOR EACH UNIT.

9 CONDIMENT COUNTER DIAGRAM
P5 NOT TO SCALE

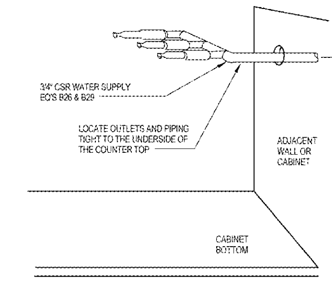

NOTE: REFER TO WATER SERVICE WATER RISER DIAGRAM FOR ADDITIONAL INFORMATION.

10 COFFEE STEP-UP COUNTER PIPING
P5 NOT TO SCALE

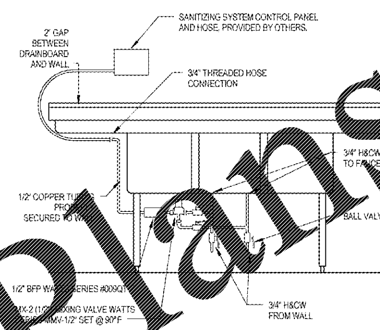

11 TEMPERED WATER @ SANITIZING SYSTEM
P5 NOT TO SCALE

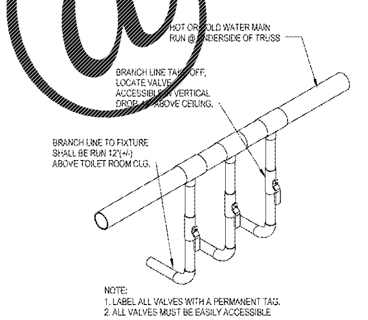

12 TOILET ROOM WATER MANIFOLD DETAIL
P5 NOT TO SCALE

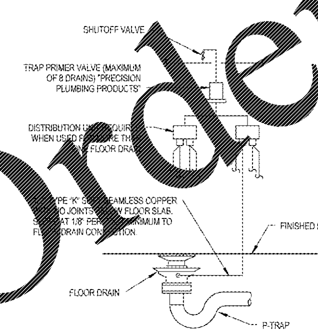

13 FLOOR DRAIN WITH TRAP PRIMER DETAIL
P5 NOT TO SCALE

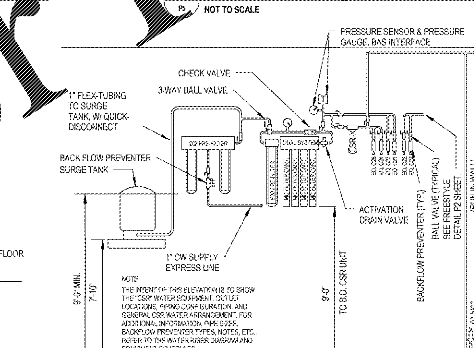

14 CSR WATER OUTLET ELEVATION
P5 NOT TO SCALE

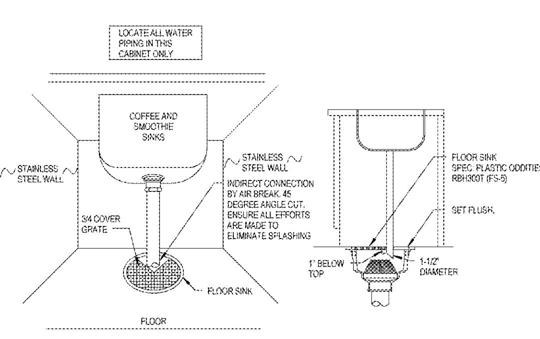

15 COFFEE SINK/BREWER INDIRECT CONNECTION
P5 NOT TO SCALE

BACKFLOW PREVENTER SCHEDULE

SERVICE & APPLICATION	MANUFACTURER	SERIES	MODEL #	SIZE	REMARKS
MAIN WATER SERVICE	WATTS REGULATOR	SERIES 909	MODEL LF909M1QT-S	1½"	WHEN A "RPZ" TYPE IS REQUIRED
MAIN WATER SERVICE	WATTS REGULATOR	SERIES 007	MODEL LF007M2QT-S	1½"	WHEN A DOUBLE CHECK VALVE IS REQUIRED
LAWN IRRIGATION	WATTS REGULATOR	SERIES 909	MODEL LF909M1QT-S	1"	WHEN VALVE IS LOCATED INSIDE THE BUILDING
LAWN IRRIGATION	WATTS REGULATOR	SERIES 800	MODEL LF800M4FR	1"	WHEN VALVE IS LOCATED OUTSIDE OF THE BUILDING
COFFEE & CAPPUCCINO MACHINES	WATTS REGULATOR	SERIES SD-3	MODEL SD3-MN	⅜"	⅜" M-NPT INLET/OUTLET INDIRECTLY ROUTE VENT DISCHARGE LINE TO FLOOR SINK
CARBONATOR & FCB ICEE MACHINE	WATTS REGULATOR	SERIES SD-3	MODEL SD3-MN	⅜"	⅜" M-NPT INLET/OUTLET INDIRECTLY ROUTE VENT DISCHARGE LINE TO HUB DRAIN
"CSR" WATER SUPPLY	WATTS REGULATOR	SERIES 7	MODEL LF7	¾"	LEAD FREE
HOT FOOD TABLE & RETHERMALIZER	WATTS REGULATOR	SERIES 7	MODEL LF7	½"	LEAD FREE
EXTERIOR GROUND HYDRANT	WATTS REGULATOR	SERIES 7	MODEL LF7	¾"	LOCATED INSIDE THE BUILDING
VACUUM RELIEF FITTING (WH-1)	WATTS REGULATOR	SERIES N36	MODEL LFN36-M1	¾"	LEAD FREE
SANTIZING EQUIPMENT @ MR-1	WATTS REGULATOR	SERIES 9D	MODEL 9D-M3	½"	-

PIPING MATERIAL SCHEDULE

SERVICE	SIZE	MATERIAL	SCHEDULE/TYPE	INSULATION		REMARKS
				TYPE	THICKNESS	
COLD WATER	ALL	CPVC	-	ARMAFLEX	1"	-
HOT WATER	ALL	CPVC	-	ARMAFLEX	1"	-
SANITARY	ALL	C.I. OR PVC	NOTE 3	NONE	-	NO HUB
VENT	ALL	C.I. OR PVC	SCH. 40	NONE	-	SEE NOTE 1
ST BELOW GRADE	ALL	C.I. OR PVC	SERVICE WEIGHT	NONE	-	NO HUB
ST ABOVE GRADE	ALL	C.I. OR PVC	SERVICE WEIGHT	FG	1"	NO HUB

NOTES:
1. WASTE AND VENT PIPING IN PLENUM SPACE SHALL BE SERVICE WEIGHT CAST IRON, NO HUB.
2. FIBERGLASS PIPE INSULATION: MINERAL OR GLASS FIBERS BONDED WITH A THERMOSETTING RESIN. SEMIRIGID BOARD MATERIAL WITH FACTORY-APPLIED ASJ COMPLYING WITH ASTM C 1393, OR WITH PROPERTIES SIMILAR TO ASTM C 612. NOMINAL DENSITY IS 2.5 LB/CU. FT. OR MORE. THERMAL CONDUCTIVITY (K VALUE) AT 100 DEG. F (55 DEG. C) IS 0.29 BTU X IN./H X SQ.FT. X DEG. F (0.042 W/M X K) OR LESS. ALL SERVICE JACKET (ASJ):
WHITE, KRAFT-PAPER, FIBERGLASS-REINFORCED SCRIM WITH ALUMINUM-FOIL BACKING; COMPLYING WITH ASTM C 1136. TYPE MANUFACTURER: A. CERTAINTEED CORP., B. JOHNS MANVILLE, C. KNAUF INSULATION. D. OWENS CORNING
3. FOR PVC ONLY SCHEDULE 40 DWV. FOAM CORE PVC NOT ALLOWED.

WATER HAMMER ARRESTOR SCHEDULE

= INSTALLED ARRESTOR SHALL BE APPROVED DEVICE BY FLORIDA PLUMBING CODE. ALL SUPPLY PIPING SHALL HAVE ARRESTOR THE SAME SIZE AS CONNECTION SIZE UP TO 1" I.E. PROVIDE P.D.I. SIZE "C" FOR 1" OR LARGER WATER SUPPLY TO FIXTURES, P.D.I. SIZE "B" FOR 3/4" SUPPLY AND P.D.I. SIZE "A" FOR 1/2" SUPPLY.

* P.D.I. SIZE	CONNECTION SIZE
A (1-11 F.U.)	1/2"
B (12-32 F.U.)	3/4"
C (33-60 F.U.)	1"

P.D.I. = PLUMBING AND DRAINAGE INSTITUTE STANDARD [illegible]

SYMBOLS AND ABBREVIATIONS

DESCRIPTION	ABBR.	SYMBOL
SANITARY PIPE ABOVE [illegible]	SAN	————
SANITARY PIPE BELOW GRADE	[illegible]	— — —
GREASE [illegible] BELOW GRADE	[illegible]	- - -
VENT	V	- - - -
COLD WATER [illegible]	CW	—— - ——
HOT WATER PIPE	HW	---- - - ----
HOT WATER RETURN PIPE	HWR	—— - - - ——
CSR WATER PIPING	CSR	--- CSR ---
CSRX WATER PIPING	CSRX	—— CSRX ——
TEMPERED WATER PIPING	TW	--- TW ---
POWER WASH WATER PIPING	PW	—— PW ——
STORM ABOVE GRADE	ST	————
STORM BELOW GRADE	ST	—— ——
STORM OVERFLOW	STO	————
ROOF DRAIN	RD	◯
FLOOR CLEANOUT	CO	——⊘
EXTERIOR CLEANOUT	ECO	——⊘——
WALL CLEANOUT	WCO	‖——
HOSE BIBB	HB	‖——
VENT THRU ROOF (EXTEND 38" ABV FINISHED ROOF)	VTR	
DIRECTION OF FLOW		——▶——
SHUT OFF VALVE		——⋈——
CAP		
TEE UP		——○——
TEE DOWN		——○——
ELBOW UP		○——
ELBOW DOWN		○——
REVISION REFERENCE		△
TYPICAL	TYP	

*SOME SYMBOLS SHOWN MAY NOT PERTAIN TO THIS PROJECT

PLUMBING GENERAL NOTES

1. CONTRACTOR SHALL COMPLY WITH ALL APPLICABLE CODES AND GOVERNING AUTHORITIES. I.E.: FLORIDA BUILDING CODE 2014.
2. ALL SANITARY PIPING 2-1/2" OR LESS SHALL HAVE A 1/4" PER FOOT SLOPE. ALL SANITARY PIPING 3" OR LARGER SHALL HAVE A 1/8" PER FOOT SLOPE UNLESS OTHERWISE NOTED. ALL STORM WATER PIPING 2-1/2" OR LESS SHALL HAVE A 1/4" PER FOOT MINIMUM HORIZONTAL SLOPE. ALL STORM WATER PIPING 3" OR LARGER SHALL HAVE A 1/8" PER FOOT MINIMUM HORIZONTAL SLOPE UNLESS OTHERWISE INDICATED.
3. VALVES AND FITTINGS SHALL BE OF SAME SIZE OF LINE ON WHICH THEY ARE LOCATED. UNLESS OTHERWISE INDICATED ON DRAWINGS.
4. INSTALL WATER HAMMER SHOCK ARRESTORS AT EACH FIXTURE OR BATTERY OF FIXTURES WHERE REQUIRED. ARRESTORS SHALL BE FACTORY FABRICATED. INSTALL ARRESTORS AND SIZE PER PLUMBING AND DRAINAGE INSTITUTE STANDARD P.D.I. WH-201. ACCEPTABLE MANUFACTURERS: JOSAM, WATTS AND SIOUX CHIEF. AIR CHAMBERS SHALL NOT BE CONSIDERED AN EQUAL TO WATER ARRESTORS AS SPECIFIED.
5. CONTRACTOR IS RESPONSIBLE FOR MAINTAINING FIRE RATING AND WEATHERPROOFING INTEGRITY OF ALL PIPING AND PENETRATIONS.
6. ALL WATER SUPPLY AND SANITARY LINES SHALL RUN AS CLOSE TO PLANS AS POSSIBLE WITH NO CHANGES IN SIZING.
7. CONTRACTOR SHALL BE RESPONSIBLE FOR PROVIDING ALL NECESSARY SUPPORTING DEVICES FOR FIXTURES.
8. CHANGES IN THE DIRECTION OF SANITARY AND STORM DRAINAGE PIPING SHALL NOT BE MADE WITH FITTINGS WHICH WILL CAUSE EXCESSIVE REDUCTION IN THE VELOCITY OF FLOW OR CREATE ANY OTHER ADVERSE EFFECT. I.E.: USE OF SANITARY TEE IN A HORIZONTAL CONNECTION. USE OF A DOUBLE SANITARY TEE IN A VERTICAL STACK. USE OF SHORT RADIUS FITTINGS FOR BRANCH TO HOUSE DRAIN OR STACK CONNECTION.
9. CONTRACTOR SHALL GIVE 24 HOURS NOTICE TO APPLICABLE UTILITY COMPANY PRIOR TO PERFORMING WORK INVOLVING UTILITIES.
10. ALL DRAINAGE PIPING SHALL BE MARKED WITH THE SEAL OF APPROVAL OF THE NATIONAL SANITATION FOUNDATION.
11. WHERE SANITARY SEWER LINES CROSS UNDERGROUND WATER SUPPLY LINES THE INSTALLATION SHALL COMPLY WITH THE FLORIDA BUILDING CODE 2014 PLUMBING, ARTICLE 603.2 CONSTRUCTED OF DUCTILE IRON PIPE (10' EACH SIDE OF WATER MAIN) OR THE WATER LINES SHOULD BE MODIFIED TO PROVIDE 8" MINIMUM CLEARANCE.
12. ALL FLOOR DRAINS SHALL BE PROVIDED WITH A TRAP PRIMER VALVE AND FITTINGS UNLESS NOTED OTHERWISE.
13. THE PLUMBING CONTRACTOR MAY BE REQUIRED TO DROP PIPE OUTSIDE OF BUILDING TO REQUIRED DEPTH TO PROVIDE CONNECTION TO AREA DEVELOPMENT UTILITY STUB. ALL DROPS IN DEPTH SHALL BE MADE WITH THE USE OF 45° FITTINGS.
14. ROUTE ALL PIPING CONCEALED ABOVE CEILINGS, WITHIN WALLS, OR IN CHASES. EXPOSED PIPING SHALL BE SLOPED AND PAINTED TO MATCH ARCHITECTURAL FINISH. PIPING IN MECHANICAL ROOMS MAY BE EXPOSED.
15. SLEEVE AND FIRE STOP ALL PENETRATIONS (IF ANY) OF RATED WALLS, FLOORS, CEILINGS, ETC., IN ACCORDANCE WITH APPLICABLE UL STANDARDS AND [illegible] CODES [illegible] MAINTAIN RATINGS. REFER TO SPECIFICATIONS AND ARCHITECTURAL DRAWINGS FOR RATED WALLS, CEILINGS AND FLOOR INFORMATION.
16. ALL WATER PIPING INSTALLED IN EXTERIOR WALLS SHALL BE PLACED ON THE INTERIOR SIDE OF THE WALL.THE WALL INSULATION SHALL BE PLACED ON THE EXTERIOR SIDE OF THE PIPE.
17. SEE RISER DIAGRAMS FOR BRANCH PIPING DETAILS AND SIZES NOT SHOWN ON PLANS.
18. COLD AND HOT WATER PIPING SHALL BE FLOWGUARD GOLD CTS CPVC TYPE AND SHALL MEET ASTM D 2846 AND ASTM D 1784. DISINFECT WATER PIPING AFTER PRESSURE TEST WITH CHLORINE SOLUTION 50 MG-L) FOR 24 HOURS. FLUSH LINES CLEAN AFTER COMPLETION.
19. SOIL, WASTE AND VENT PIPING SHALL BE PVC: ASTM D2665 SCHEDULE 40. FITTINGS: PVC DWV JOINTS: ASTM WEL[illegible] [illegible]DE CAST IRON PIPE AND [illegible] WASTE AND VENT PIPING LOCATED IN CEILING PLENUMS.
20. PROVIDE CLEANOUTS AT BASE OF EACH VERTICAL STACK AT EACH CHANGE OF DIRECTION OF HORIZONTAL RUNS AND [illegible] FOOT INTERVALS OF HORIZONTAL RUNS FOR SANITARY AND STORM PIPING.
21. PROVIDE ACCESS PANELS TO ALL VALVES WITHIN CHASES OR ABOVE NON-ACCESSIBLE CEILINGS. REFER [illegible] ARCHITECTURAL DRAWINGS [illegible] CEILING TYPES.
22. METERING AND SITE UTILITY CONNECTIONS SHALL BE PROVIDED ON SITE UTILITY DRAWINGS. ALL SERVIC[illegible] SHOWN ON THIS SET OF PLANS [illegible]MINATE 5'-0" FROM BUILDING, UNLESS SHOWN OTHERWISE ON DRAWINGS. PLUMBING CONTRACTOR SHAL[illegible] CONN[illegible]ONS TO SITE UTILITIES.
23. FURNISH AND INSTALL HOSE BIBBS AND/OR WALL HYDRA[illegible]4" ABOVE FINISHED GR[illegible] [illegible] PROV[illegible] VACUUM BREA[illegible]S.
24. SEE ARCHITECTURAL DRAWINGS FOR EXACT LOCATIONS OF ROOF DRAINS, PL[illegible] FIXTURE [illegible]TING HE[illegible]IONS.
25. CONTRACTOR SHALL VERIFY INVERT ELEVATIONS OF EXISTING SEWERS IN [illegible]W SEWER LI[illegible]RE TO BE [illegible] PRIOR TO START OF CONSTRUCTION.
26. CONTRACTOR SHALL INSTALL DIELECTRIC UNIONS AT CONNECTIONS OF DISSIM[illegible]METALS.
27. CONTRACTOR SHALL ROUGH-IN ALL WASTE AND SUPPLIES TO SP[illegible] EQUIPMEN[illegible]ORDING TO M[illegible]ACTURER'S SHOP DRAWINGS AND MAKE FINAL CONNECTIONS. ALL SUPPLIES SHALL BE VALVED. INSTALL VACUUM BREAKERS [illegible] REQUIRED B[illegible].
28. PROVIDE REDUCED PRESSURE [illegible]CKFLOW PREVENTERS FOR DOM[illegible] WATER SUP[illegible]ONNECTIONS [illegible] REQUIRED BY CODE.
29. ALL BELOW GRADE/SLAB [illegible]ING SHALL BE PLACED WITHIN POLY[illegible]ENE PLASTIC [illegible]EVING, EXTEND SLEEVING ABOVE GRADE/SLAB.
30. CONTRACTOR SHALL [illegible] [illegible]UMBING DRAWINGS FOR EXACT LO[illegible]NS OF FLOOR [illegible] (IF ANY) LOCATED WITHIN TOILET ROOMS.
31. PRESSURE REDU[illegible]ING VALVE[illegible]L BE INSTALLED ON BRANCH LINES S[illegible]G FIXTURE [illegible]D/OR EQUIPMENT WHEN THE PRESSURE IN THE LINE EXCEEDS 80 P.S.I.
32. COORDINATE [illegible]ACT LOCATION [illegible]OOR DRAINS FOR HVAC EQUIPMENT [illegible] MECHANICAL CONTRACTOR. CONDENSATE PIPING SHALL NOT DISCHARGE INTO SANITARY SYSTEM.
33. ROUTE WA[illegible]NES TIGHT TO STR[illegible]RE. COORDINATE ROUTI[illegible] TO AVOI[illegible]CONFLICTS WITH OTHER DISCIPLINES.
34. IF THE INTE[illegible]HE DRAWINGS A[illegible]SPECIFICATIONS IS UN[illegible]EAR OR HAS MORE THAN ONE INTERPRETATION, IT SHALL BE BROUGHT TO THE ATTENTION OF THE ARCHITECT/E[illegible]ER IN WRITING BE[illegible]HE SUBMISSION OF [illegible]. THE ARCHITECT/ENGINEER SHALL MAKE CORRECTIONS AND/OR PROVIDE EXPLANATION IN WRITING.
35. PLANS AND SPE[illegible]TIONS ARE INTEN[illegible] A GENERAL D[illegible]IPTION OF THE WORK TO BE PERFORMED. ALL ITEMS NOT SPECIFICALLY MENTIONED OR SHOWN, BUT [illegible]ECESSARY FOR [illegible]OMPLETION OF TH[illegible]ALLATION [illegible]ALL BE FURNISHED AND INSTALLED BY THIS CONTRACTOR. THE CONTRACTOR SHALL ACQUAINT HIMSELF [illegible]HE MECHAN[illegible]RCHITECTURAL, [illegible]ND ELECTRICAL PLANS PRIOR TO SUBMITTING HIS FINAL BID. NO ADDITIONAL COMPENSATION WILL BE ALLOWED [illegible]ONTRACTOR[illegible]LURE TO FAMILIA[illegible]SELF WITH THE PLANS.
36. THE [illegible]ACTOR SHA[illegible]E HIS PROPOS[illegible]PON THE EQUIPMENT AS SCHEDULED OR SPECIFIED, USING THE MANUFACTURERS AND EQUIPMENT SPECIFIED ON THE DRAW[illegible]F MORE THA[illegible] MANUFACTURER IS SPECIFIED FOR ONE ITEM, ANY ONE OF THE MANUFACTURERS LISTED MAY BE USED IN THIS CONTRACTOR'S PROPO[illegible] THIS CONTR[illegible]WISHES TO USE EQUIPMENT NOT SPECIFIED. HE MUST AT THE TIME OF BIDDING SUBMIT SEPARATELY ON LETTERHEAD STATIONARY OF THE BID[illegible]HE EQUIPMEN[illegible]WOULD SUBSTITUTE AND THE COST TO BE ADDED OR TO BE DEDUCTED FROM HIS PROPOSAL.
37. THE CON[illegible]TOR IS EXPE[illegible]D TO ORDER ALL MATERIALS IN SUFFICIENT TIME TO AVOID DELAYING THE COMPLETION OF THE PROJECT. DELAY IN DELIVERY WILL NOT BE CONSIDE[illegible] A JUSTIFIABLE REASON FOR SUBMISSION OF SUBSTITUTE MATERIALS.
38. DO NOT [illegible]ETRATE WALL FOOTINGS WITH PIPING. COORDINATE WITH GENERAL CONTRACTOR TO DROP FOOTINGS AS REQUIRED TO CLEAR PLUMBING SERVICES WHERE ABSOLU[illegible]Y NECESSARY. ALL PIPING PENETRATING A BEARING WALL OR FOOTING MUST BE SLEEVED AND LOCATION APPROVED BY STRUCTURAL ENGINEER.
39. REFE[illegible] PLANS FOR VENT THRU ROOF (VTR) PIPE SIZES AND LOCATIONS. LOCATE VTR A MIN. 10' HORIZONTAL FROM ANY BUILDING OPENING OR FRESH AIR INTAKE. EX[illegible]D VTR 3' ABOVE ROOF SURFACE. IF 10' DISTANCE CANNOT BE ACHIEVED LOCATE VTR 3' ABOVE ADJACENT TOP OF FRESH AIR INTAKE OR BUILDING OPENINGS. [illegible]OVIDE 1" FIBERGLASS INSULATION WITH ALL-SERVICE JACKET ON VENT PIPE INSIDE BUILDING WITHIN 6' OF VTR LOCATION. VERIFY FLASHING AND COUNTERFLASHING AND COORDINATE INSTALLATION WITH ROOFING CONTRACTOR.

FIXTURE SPECIFICATIONS

TAG	FIXTURE	MANUFACTURER	MODEL #	SUPPLIED BY	PIPE SIZE				DESCRIPTION
					CW	HW	SAN	VENT	
[illegible]AV	AIR ADMITTANCE VALVE	OATEY	39016	PC	-	-	-	-	20 DFU, SURE-VENT AIR ADMITTANCE VALVE WITH 1-½" X 2" PVC SCHEDULE 40 ADAPTER. INSTALL PER MANUFACTURERS REQUIREMENTS.
[illegible]-1	BOOSTER PUMP	GRUNDFOS	BMQE 22 05A-80	HJC	-	-	-	-	PROVIDE WITH WALL MOUNTED CONTROLLER, DIAPHRAGM TANK, PRESSURE SENSORS AND ANY OTHER MANUFACTURER REQUIREMENTS. ½ HP, 115V
[illegible]	CALIBRATED BALANCE VALVE	BELL & GOSSETT	CB3/4LF	PC	-	-	-	-	FURNISH AND INSTALL AS SHOWN ON PLANS AND WITH MANUFACTURERS RECOMMENDATIONS MODEL CB CALIBRATED BALANCE VALVES.
D8	POWER WASHER	HOTSY	S120A-2	WAWA	1/2"	-	-	-	HOTSY UNIT FURNISHED BY OWNER INSTALLED BY PLUMBING CONTRACTOR. CONTRACTOR SHALL COORDINATE EXACT NUMBER OF OUTLET BOXES & LOCATIONS. PIPING INTO THE OUTLET BOXES SHALL BE LOCATED ON THE TOP OF THE BOX, CENTERED, 1 INCH FROM THE LEFT SIDE. EXTEND THREADED PIPING 1 INCH INTO THE BOX. OUTLET VALVE & CONNECTION PROVIDED BY EQUIPMENT INSTALLER. PIPING SHALL BE 1/2 INCH, SCHEDULE 80, GALVANIZED STEEL PIPE & THREADED FITTINGS. PIPING LOCATED IN EXTERIOR WALLS SHALL BE INSULATED & RUN TIGHT TO THE INSIDE OF THE WALL. PIPING RUN ABOVE THE CEILING DOES NOT REQUIRE INSULATION. MULTIPLE OUTLET CONFIGURATIONS: PROVIDE PIPED MANIFOLD WITH A VALVED BRANCH LINE FOR EACH BOX; VALVES SHALL BE HIGH PRESSURE, CARBON STEEL 1/4 INCH TURN BALL VALVES. PROVIDE A 1/2 INCH VALVED COLD WATER OUTLET, BACKFLOW PREVENTER & 1/2 INCH THREADED MALE HOSE AS DETAILED ON THE PLUMBING DRAWINGS. CONNECTION TO THE WATER OUTLET PROVIDED BY THE EQUIPMENT INSTALLER. PROVIDE A 1/2 INCH THREADED FEMALE FITTING FOR THE POWER WASH DISCHARGE CONNECTION, CONNECTION PROVIDED BY THE EQUIPMENT INSTALLER. COORDINATE WITH DETAIL ON THIS PAGE. USE TEFLON TAPE ON THREADED JOINTS; DO NOT USE PIPE DOPE.
EWC-1	ELECTRIC WATER COOLER	ELKAY HI-LO	EZSTL8LC	HJC	1/2"	-	2"	1-1/2"	BARRIER FREE ADA COMPLIANT ELECTRIC WATER COOLER. COORDINATE POWER OUTLET LOCATION WITH ELECTRICAL CONTRACTOR FOR ELECTRICAL CORD WITH 3-PRONG PLUG. INSTALL PER MANUFACTURERS RECOMMENDATIONS. REFER TO ARCHITECTURAL ELEVATION VIEWS FOR MOUNTING HEIGHTS.
ECO	EXTERIOR CLEANOUT	JAY R. SMITH	4313	HJC	-	-	-	-	HEAVY TRAFFIC AREA EXTERIOR CLEANOUT WITH ACCESS COVER AND TWO-WAY FITTING. SEE PLANS FOR PIPE SIZE CONNECTION.
EWH-1	ELECTRIC WATER HEATER	BRADFORD WHITE	M-II-50-15-3SF	HJC	1-1/2"	1-1/2"	-	-	50 GALLON "VITRAGLAS" LINED STEEL TANK, MAGNESIUM ANODE ROD AND NON-CFC FOAM INSULATION BETWEEN OUTER STEEL JACKET. SURFACE MOUNTED THERMOSTAT AND SCREW IN STYLE INCOLOY SHEATHED HEATING ELEMENTS. 15 KW, 208V, 3PH., SET OUTLET TEMPERATURE AT 140 °F. WATER HEATER STAND BY HOLD-RITE MODEL #40-S-24-U. PROVIDE THERMAL EXPANSION TANK WILKINS XT-8
F3	3 COMPARTMENT SINK	-	-	WAWA	3/4"	3/4"	-	-	FURNISHED BY WAWA, INSTALLED BY PLUMBING CONTRACTOR.
F5	HAND SINK	KROWNE	HS-30L	HJC	1/2"	1/2"	2"	1-1/2"	WALL MOUNTED, S/S HAND SINK WITH FAUCET & STRAINER, CHROME PLATED BRASS ANGLE STOPS WITH CHROME PLATED RISERS AND CHROME PLATED ESCUTCHEONS; CHROME PLATED BRASS TAILPIECE & TRAP(PVC NOT PERMITTED). FAUCET HANDLES SHALL BE ALIGNED TO BE PERPENDICULAR TO THE FLOOR WHEN IN THE CLOSED POSITION. PROVIDE MIXING VALVE WATTS MODEL #LFMMV-US-M1. MIXING VALVE SHALL BE LOCATED ABOVE THE "LAY-IN" CEILING TILE WHERE APPLICABLE. TEMPERATURE GAUGE SHALL BE EASILY READABLE FROM THE FLOOR OR A LADDER. TEMPERED WATER SHALL BE SET AT 120°F.
FCO	FLOOR CLEANOUT	ZURN	Z1400	HJC	-	-	-	-	FLOOR CLEANOUT WITH ACCESS COVER. SEE PLANS FOR PIPE SIZE CONNECTION.
FD-1	FLOOR DRAIN	JAY R. SMITH	2005-A	HJC	-	-	3"	1-1/2"	CAST IRON BODY WITH BOTTOM OUTLET, NICKEL BRONZE ROUND STRAINER. PROVIDE DEEP SEAL TRAP AND TRAP PRIMER CONNECTION OUTLET.
FD-2	FLOOR DRAIN	JAY R. SMITH	2005-B	HJC	-	-	3"	1-1/2"	CAST IRON BODY WITH BOTTOM OUTLET, NICKEL BRONZE SQUARE STRAINER. PROVIDE DEEP SEAL TRAP AND TRAP PRIMER CONNECTION OUTLET.
FD-3	FLOOR DRAIN	JAY R. SMITH	2005-F37	HJC	-	-	3"	1-1/2"	CAST IRON BODY WITH BOTTOM OUTLET, NICKEL BRONZE ROUND STRAINER WITH FUNNEL. PROVIDE DEEP SEAL TRAP AND TRAP PRIMER CONNECTION OUTLET.
FS-1	FLOOR SINK	PLASTIC ODDITIES	RBH-300H	HJC	-	-	SEE PLANS	-	12"Ø x 5.5" DEEP, PLASTIC BODY WITH ACID RESISTING INTERIOR AND HALF PLASTIC GRATE TOP.
FS-5	FLOOR SINK	PLASTIC ODDITIES	RBH-300T	HJC	-	-	SEE PLANS	-	12"Ø x 5.5" DEEP, PLASTIC BODY WITH ACID RESISTING INTERIOR AND THREE-QUARTER PLASTIC GRATE TOP.
HUB-1	HUB DRAIN	-	-	HJC	-	-	3"	-	3" X 6" INCREASER FITTING. TOP OF FITTING SET @ 1" A.F.F. PROVIDE WITH 3" SNAP-IN STRAINER. SEE HUB DRAIN DETAIL THIS SHEET.
HUB-2	HUB DRAIN	-	-	HJC	-	-	3"	-	TOP OF FITTING SET @ 1" A.F.F. PROVIDE WITH 3" SNAP-IN STRAINER.
LAV-1	LAVATORY UNDERMOUNT SINK	ELKAY	ELUH1811 W/ LKUCLIP	CABINET	1/2"	1/2"	2"	1-1/2"	ADA COMPLIANT UNDER MOUNT STAINLESS STEEL LAVATORY. INSTALL AS REQUIRED TO MEET ADA GUIDELINES. PROVIDE WITH: MCGUIRE MODEL #H158LK, & #8902. PROVIDE ZURN FAUCET MODEL #Z6915-GEN WITH THESE OPTIONS 0.5 GPM VANDAL RESISTANT LAMINAR FLOW & LOW LEAD COMPLIANT. PROVIDE WITH MIXING VALVE WATTS MODEL #LFMMV-US-M1. INSTALL USING MANUFACTURERS RECOMMENDATIONS. USE OFFSET TAILPIECE TO AVOID CONTACT WITH DOOR.
LAV-2	LAVATORY WALL HUNG	AMERICAN STANDARD	0355.012	HJC	1/2"	1/2"	2"	1-1/2"	ADA COMPLIANT WALL HUNG VITREOUS LAVATORY. INSTALL AS REQUIRED TO MEET ADA GUIDELINES. PROVIDE WITH MCGUIRE MODEL #H158LK, #155A, & #8902. PROVIDE ZURN FAUCET MODEL #Z6915-GEN WITH THESE OPTIONS 0.5 GPM VANDAL RESISTANT LAMINAR FLOW & LOW LEAD COMPLIANT. PROVIDE LAV SHIELD TRUEBRO MODEL #2018-AS-L. PROVIDE WITH MIXING VALVE WATTS MODEL #LFMMV-US-M1. INSTALL USING MANUFACTURERS RECOMMENDATIONS.
MW5.4/ MW9.1	SINK COUNTERTOP	-	-	CABINET	1/2"	1/2"	2"	1-1/2"	FURNISHED BY WAWA, INSTALLED BY PLUMBING CONTRACTOR. REFER TO DETAIL 15 FOR MW5.4.
MW4	SINK COUNTERTOP	-	-	CABINET	1/2"	1/2"	2"	1-1/2"	FURNISHED BY WAWA, INSTALLED BY PLUMBING CONTRACTOR.
MX-1	MIXING VALVE (LAVATORIES)	WATTS REGULATOR	LFMMV-US-M1	HJC	1/2"	1/2"	-	-	ASSE 1070 MIXING VALVE SET AT 110° F (UNLESS NOTED).
MX-2	MIXING VALVE (HAND WASHING)	WATTS REGULATOR	LFMMV-US-M1	HJC	1/2"	1/2"	-	-	ASSE 1070 MIXING VALVE SET AT 120° F (UNLESS NOTED).
MR-1	MOP RECEPTOR	FIAT	MSB-3624	HJC	3/4"	3/4"	3"	1-1/2"	FLOOR MOUNTED MOLDED PLASTIC BASIN WITH HOSE BRACKET 832-AA. WALL MOUNTED FAUCET 830-AA, MOP HANGER 889-CC AND CORNER GUARD ON THE FRONT LIP.
RD-1	ROOF DRAIN	JAY R. SMITH	1340T	HJC	-	-	-	-	DUCO CAST IRON BODY WITH COMBINED FLASHING CLAMP & GRAVEL STOP WITH POLYETHYLENE DOME AND EXTENSION SLEEVE AS REQUIRED.
RD-2	PRIMARY ROOF DRAIN	ZURN	ZC-100	HJC	-	-	-	-	MAIN ROOF DRAIN. COATED CAST IRON BODY WITH WITH CAST IRON DOME STRAINER. PIPE SIZE = 4"
RP-1	RECIRCULATING PUMP	BELL & GOSSETT	NBF-9F/LW	HJC	-	-	-	-	PROVIDE WITH MODEL AQS-1/2 AQUASTAT. PROVIDE ELECTRICAL DISCONNECT SWITCH. ELECTRICAL REQUIREMENTS ARE 115v/1/60hz. CAPACITY FOR PUMP IS 5 GPM AT 5 FT HEAD.
TP-1	TRAP PRIMER	PRECISION PLUMBING	P1-500	HJC	1/2"	-	-	-	PROVIDE TRAP PRIMER AS INDICATED ON THE PLUMBING DRAWINGS. WHEN A SINGLE PRIMER SERVES MULTIPLE FIXTURES, PROVIDE TRAP PRIMER WITH A DISTRIBUTION UNIT.
UR-1	URINAL	AMERICAN STANDARD	6590.001.020	HJC	3/4"	-	2"	1-1/2"	ADA COMPLIANT FLUSHING RIM, VITREOUS CHINA URINAL. LOW CONSUMPTION AND SIPHON JET FLUSH ACTION. SLOAN "ROYAL OPTIMA" FLUSH VALVE MODEL 186-1 ES-S TOP SPUD WITH ACCESSORY EL-154. PROVIDE K2 HANGERS. COORDINATE WITH BLOCKING ON A1.
WC-1	WATER CLOSET FLUSH VALVE (ADA)	AMERICAN STANDARD	3461.001	HJC	1"	-	4"	2"	FLOOR MOUNTED ADA COMPLIANT, VITREOUS CHINA, 1.6 GPF, TOP SPUD, ELONGATED FLUSH VALVE WATER CLOSET. PROVIDE WITH MANUFACTURERS RECOMMENDED ANGLE SUPPLY STOPS, SLOAN "ROYAL OPTIMA" FLUSH VALVE MODEL 111 ES-S TOP SPUD WITH ACCESSORIES EL-154 & EL-226. PROVIDE WITH OLSONITE MODEL #95SSCT SEAT.
WCH	WALL HYDRANT	JAY R. SMITH	5509QT-SAP-RB	HJC	3/4"	-	-	-	PROVIDE WALL HYDRANTS AS LOCATED ON THE PLUMBING DRAWINGS. WALL HYDRANTS SHALL BE AUTOMATIC DRAINING WITH 3/4 INCH VACUUM BREAKER HOSE CONNECTION. COLD WATER SUPPLY SHALL BE PROVIDED WITH A BACKFLOW PREVENTER AS INDICATED ON THE PLUMBING DRAWINGS.
WCH-1	WALL HYDRANT - GAS CANOPY	JAY R. SMITH	5618	HJC	3/4"	-	-	-	PROVIDE WALL HYDRANTS AS LOCATED ON THE CANOPY AND PLUMBING DRAWINGS. WALL HYDRANTS SHALL BE EQUIPED WITH KEYED OPETION AND HAVE 3/4 INCH VACUUM BREAKER HOSE CONNECTION. COLD WATER SUPPLY SHALL BE PROVIDED WITH A BACKFLOW PREVENTER. PROVIDE HOSE HOOK.
WCO	WALL CLEANOUT	ZURN	Z1446	HJC	-	-	-	-	WALL CLEANOUT WITH STAINLESS STEEL ROUND ACCESS COVER. SEE PLANS FOR PIPE SIZE CONNECTION.
WHA	WATER HAMMER ARRESTOR	WILKINS	1250	HJC	-	-	-	-	WATER HAMMER ARRESTOR SHALL MEET ASSE 1010. THE DEVICE SHALL CONSIST OF A COPPER BODY WITH AN ACETAL PISTON, BUNA NITRILE O-RINGS AND LEAD FREE SOLDER. THE DEVICE SHALL BE PRE-CHARGED AND SEALED AT THE FACTORY.

NOTES:
1. REFER TO ARCHITECTURAL DRAWINGS FOR ALL FINAL LOCATIONS AND MOUNTING DIMENSIONS OF ALL PLUMBING FIXTURES. PROVIDE ADA CONFORMING FACTORY INSULATION KIT ON HOT, COLD AND P-TRAP WASTE PIPING AT HANDICAP DESIGNATED LAVATORIES.
2. SEE EQUIPMENT SCHEDULE ON SHEET EQ FOR EQUIPMENT NOT LISTED.

1925 Prospect Ave.
Orlando, FL 32814
P (407) 661-9100
F (407) 661-9101
www.c-p.com
Cuhaci & Peterson
Architects Engineers Planners

CLIENT NAME
WAWA
260 WEST BALTIMORE PIKE
WAWA, PENNSYLVANIA 19063

PROJECT NAME
WAWA F85FB 2017.01 STORE #5294-CNY
26508 U.S. 19 NORTH
CLEARWATER, FL. 33761

SHEET TITLE
PLUMBING SCHEDULE & DETAILS

Revision Schedule

No.	Description	Date
	PERMIT SET	01/31/2017
	PRE-BID REVIEW SET	07/26/2017
	BID SET	09/06/2017

PROJECT NO. 20161282
DATE 01/31/2017
DRAWN Author
CHECKED Checker

P5

Order Plans @ www.LDline.com