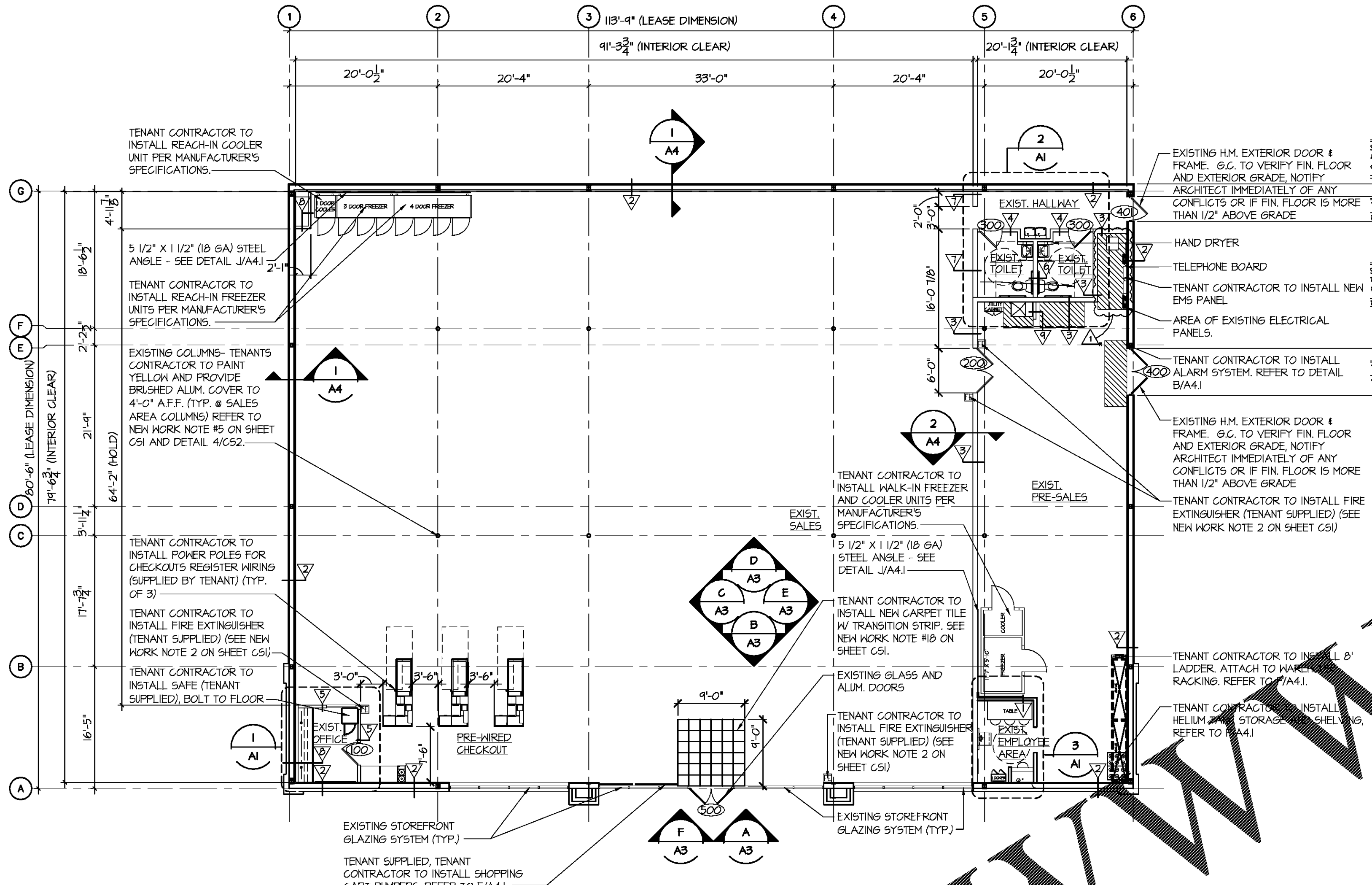

FLOOR PLAN
SCALE: 1/8"=1'-0"
NORTH

EXTERIOR IS NOT PART OF DESIGN SCOPE. LANDLORD'S RESPONSIBILITY.

NOTE: TENANT CONTRACTOR SHALL VERIFY FLOOR IS LEVEL WITHIN 1/4" IN 10 LINEAR FEET UNDER FREEZER/COOLER REACH-INS AND STORAGE. CONTRACTOR SHALL NOTIFY THE DOLLAR TREE CONSTRUCTION PM IF THIS REQUIREMENT IS NOT MET.

NOTE:
SEE 'GENERAL SITE ACCESSIBILITY NOTES', SHEET CS1, FOR ADDITIONAL REQUIREMENTS.

NOTE:
VERIFY LOCATION OF CHECKOUTS, REACH-IN F/C & WALK-IN F/C WITH FIXTURE PLAN. IF THERE IS ANY CONFLICTS WITH LOCATIONS OF CHECKOUTS, CONTACT CONSTRUCTION PROJECT MANAGER FOR DIRECTION.

NOTE:
CONTRACTOR SHALL VERIFY WITH DOLLAR TREE CONSTRUCTION PROJECT MANAGER ANY PROPOSED CUSTOM INTERIOR WINDOW GRAPHICS/FILM PRIOR TO BUILDING INFILL WALL AT STOREFRONT.

EXISTING SIDEWALK AND SITE CONDITIONS NOT A PART OF PROJECT SCOPE. LANDLORD PROPERTY.

TENANT CONTRACTOR INSTALLED F R P (FIBERGLASS REINFORCED PANEL) TO 4'-0" A.F.F. ON SALES FLOOR (ON AREAS NOT COVERED BY GONDOLA UNITS, TYP.) SHALL BE ALMOND COLOR WITH "J" CHANNEL TRIM CAP AND "H" CHANNEL PANEL CONNECTORS.

NOTE:
ALL ADA COMPLIANCE AND SITE PLANNING ISSUES OUTSIDE THE DOLLAR TREE LEASED PREMISES SHALL BE THE RESPONSIBILITY OF THE PROPERTY OWNER, THEIR CONSULTANTS, PROPERTY MANAGERS, AND/OR ASSIGNED REPRESENTATIVES.

WALL CONSTRUCTION TYPES

1. KNEEWALL: EXISTING 2 X 4 FIRE RETARDANT WOOD STUDS @ 16" O.C. WITH 3/4" MDO PLYWOOD ON EACH SIDE TO 4'-0" A.F.F. REFER TO 4/A1 FOR ADDITIONAL INFORMATION. TENANT CONTRACTOR TO FINISH PER FINISH SCHEDULE, SHEET A4.
2. TENANT DEMISING WALL: EXISTING METAL BUILDING WALL WITH STUDS AND GWB. PATCH AND REPAIR WALL AS REQUIRED TO LIKE NEW CONDITION. SEE DETAIL 1/A4 FOR ADITIONAL REQUIREMENTS. REFER TO SHEET A3 FOR GONDOLA LOCATION IF REQUIRED. REFER TO SECTION 7/A4 FOR GONDOLA ATTACHMENT. TENANT CONTRACTOR TO FINISH PER FINISH SCHEDULE, SHEET A4.
3. PARTITION WALL: EXISTING 6" (20 GAUGE) METAL STUDS @ 16" O.C. WITH ONE LAYER OF 5/8" GWB (WR GWB @ PLUMBING FIXTURES) EACH SIDE TO ROOF DECK. SEE DETAIL 2/A4 FOR ADDITIONAL REQUIREMENTS. REFER TO SHEET A3 FOR GONDOLA LOCATION IF REQUIRED. REFER TO SECTION 7/A4 FOR GONDOLA ATTACHMENT. TENANT CONTRACTOR TO FINISH PER FINISH SCHEDULE, SHEET A4.
4. PARTITION WALL: EXISTING 3 5/8" (20 GAUGE) METAL STUDS @ 16" O.C. WITH 5/8" GWB (WR GWB @ PLUMBING FIXTURES) ON EACH SIDE TO 6" A.F.C. BRACE WALL TO STRUCTURE AS REQUIRED. SEE DETAIL 6/A4 FOR ADDITIONAL INFORMATION. FINISH PER FINISH SCHEDULE, SHEET A4.
5. PARTITION WALL: EXISTING 3 5/8" (20 GAUGE) METAL STUDS @ 16" O.C. WITH ONE LAYER 5/8" GWB EACH SIDE TO 8'-0" AFF. TENANT CONTRACTOR TO FINISH PER FINISH SCHEDULE SHEET A4. REFER TO DETAIL 3/A4 FOR ADDITIONAL INFORMATION.
6. PARTITION WALL: EXISTING 6" (20 GAUGE) METAL STUDS @ 16" O.C. WITH ONE LAYER OF 5/8" WR GWB ON EACH SIDE TO FINISHED CEILING. LANDLORD CONTRACTOR TO FINISH PER FINISH SCHEDULE, SHEET A4.
7. PARTITION WALL: EXISTING 6" (20 GAUGE) METAL STUDS @ 16" O.C. WITH 5/8" GWB (WR GWB @ PLUMBING FIXTURES) ON EACH SIDE TO 6" A.F.C. SEE DETAIL 2/A4 FOR ADDITIONAL INFORMATION. REFER TO SHEET A3 FOR GONDOLA LOCATION IF REQUIRED. REFER TO SECTION 7/A4 FOR GONDOLA ATTACHMENT. FINISH PER FINISH SCHEDULE, SHEET A4.
8. PARTITION WALL: EXISTING 3 5/8" (20 GAUGE) METAL STUDS @ 16" O.C. WITH ONE LAYER OF 5/8" GWB ON ONE SIDE ONLY TO 6" A.F.C. BRACE WALL TO STRUCTURE AS REQUIRED. TENANT CONTRACTOR TO FINISH PER FINISH SCHEDULE, SHEET A4.
9. PARTITION WALL: EXISTING 3 5/8" (20 GAUGE) METAL STUDS @ 16" O.C. WITH ONE LAYER 5/8" GWB (WR GWB @ PLUMBING FIXTURES) ON EACH SIDE TO 8'-0" A.F.F. BRACE WALL TO STRUCTURE AS REQUIRED. FINISH PER FINISH SCHEDULE, SHEET A4.

DOLLAR TREE

GENERAL INFORMATION:

SHOPPING CENTER:	SALEM BTS
CITY:	SALEM
STATE:	MISSOURI
CEILING HEIGHT (SALES AREA):	11'-0" AFF
SPRINKLERED:	NO

SQUARE FOOTAGES

TOTAL SPACE LEASED:	9,251 SF	
SALES FLOOR AREA:	7,520 SF	
NON-SALES AREA:	1,732 SF	18.7 %
USABLE STOCKROOM:	935 SF	10.1 %
USABLE SALES FLOOR	7,137	

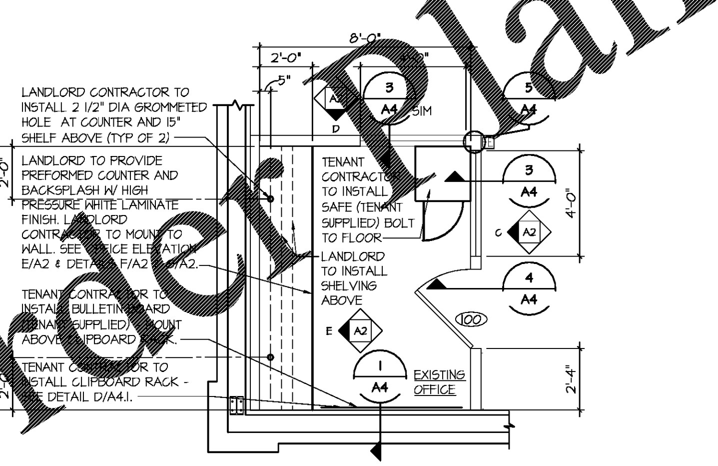

ENLARGED EXISTING OFFICE PLAN
SCALE: 3/8"=1'-0"

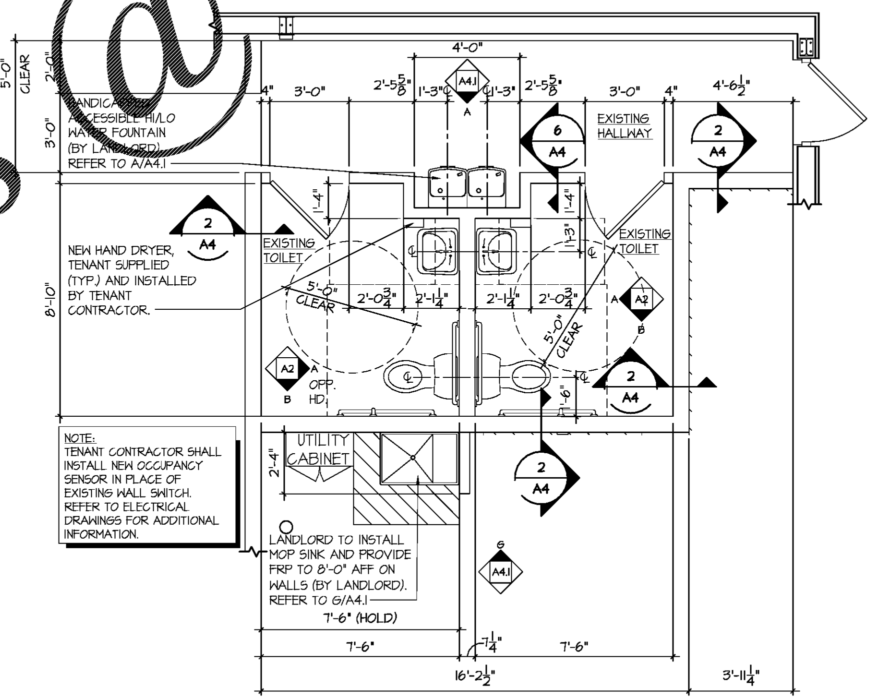

NOTE:
TENANT CONTRACTOR SHALL INSTALL NEW OCCUPANCY SENSOR IN PLACE OF EXISTING WALL SWITCH. REFER TO ELECTRICAL DRAWINGS FOR ADDITIONAL INFORMATION.

ENLARGED EXISTING TOILET PLAN
SCALE: 3/8"=1'-0"

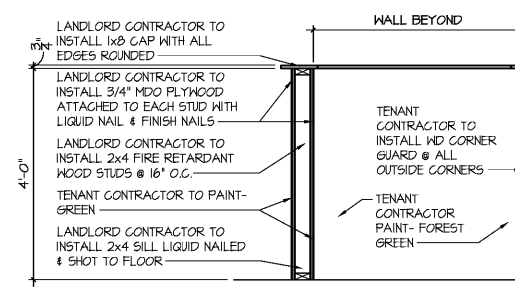

EMPLOYEE AREA SECTION
SCALE: 3/4"=1'-0"

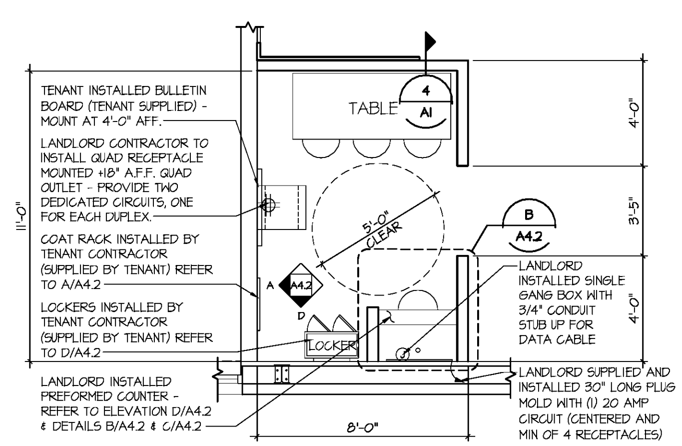

ENLARGED EXISTING EMPLOYEE AREA
SCALE: 3/8"=1'-0"

mark	date	by	description
1	01/09/18	KMK	OWNER CHANGES

revisions

date	01/04/18
project	518455
designed	KMK
drawn	KMK
checked	DRB

CASCO
10877 WATSON ROAD
ST. LOUIS, MO 63127
PROJECT MANAGERS

CASCO DIVERSIFIED CORPORATION
ARCHITECTURAL FIRM
LICENSE #000329
EXPIRES 12/31/19

PROFESSIONAL OF RECORD
MARK S. BROMEIER
LIC. #A005177
EXPIRES: 12/31/18
PHONE: 314-821-1100

project
DOLLAR TREE
SALEM BTS
1317 SCENIC RIVERS BLVD., SALEM, MO 65560

drawing
FLOOR PLAN, WALL CONSTRUCTION TYPES, AND ENLARGED OFFICE, TOILET PLANS

A1

Order Plans @ www.LDILine.com