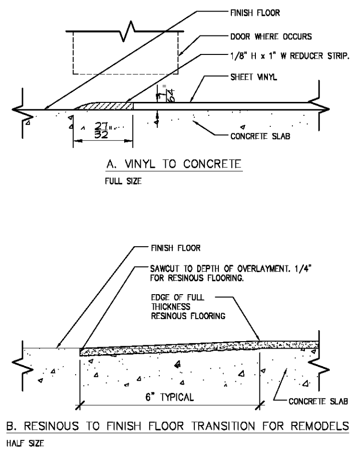

NOTE:
REFER TO SPECIFICATIONS SECTION 09 65 13.

ORIGINAL ISSUE DATE 11/10/11

TRANSITION DETAILS — DATE: 7/13/16 SCALE: NONE DRAWN: ZAW — MASTER SPECIFICATION DRAWING — ASD-4B

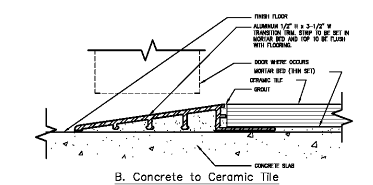

Note:
REFER TO SPECIFICATIONS FOR PRODUCTS.

TRANSITION DETAILS — DATE: 9/10/15 SCALE: NONE DRAWN: ZAW — MASTER SPECIFICATION DRAWING — ASD-4C

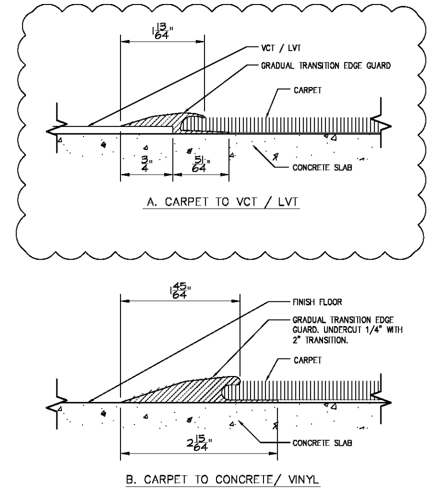

NOTE:
REFER TO SPECIFICATIONS SECTION 09 65 13.

CARPET TRANSITION DETAILS — DATE: 7/13/16 SCALE: NONE DRAWN: ZAW — MASTER SPECIFICATION DRAWING — ASD-4E

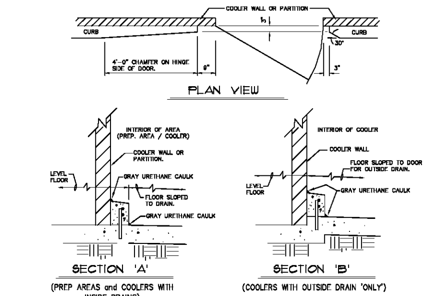

** Note:
THIS DESIGN ALSO APPLIES TO FREEZER APPLICATIONS BUT WITHOUT DRAIN AND WITH LEVEL FLOOR.

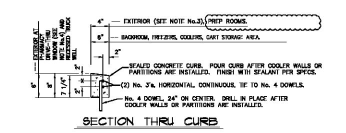

GENERAL NOTES:

1. PROVIDE A SMOOTH FINISH ON ALL CONCRETE CURB SURFACES.
2. ONLY LOCATE CURBS IN AREAS SUBJECT TO EQUIPMENT OPERATIONAL DAMAGE. DO NOT LOCATE CURBS BEHIND TABLES, EQUIPMENT, ETC. REFER TO ARCHITECTURAL PLANS TO COORDINATE CURB LOCATIONS WITH FIXTURE PLAN.
3. EXTERIOR APPLICATIONS ONLY – FILL FIRST COURSE OF BLOCKS WITH CONCRETE AND PROVIDE WEEP DRAINS ABOVE
4. EXCEPTION – 6" HIGH CURB ALONG EXTERIOR WALL AT PHARMACY DRIVE-THRU WINDOW. LINE OF PAVEMENT DROPPED 6" BELOW INSIDE FINISHED FLOOR.

POURED CONCRETE CURB DETAIL (FOR AREAS WITHOUT FLOOR FINISH) — DATE: 3/24/17 SCALE: NONE DRAWN: — MASTER SPECIFICATION DRAWING — ASD-6

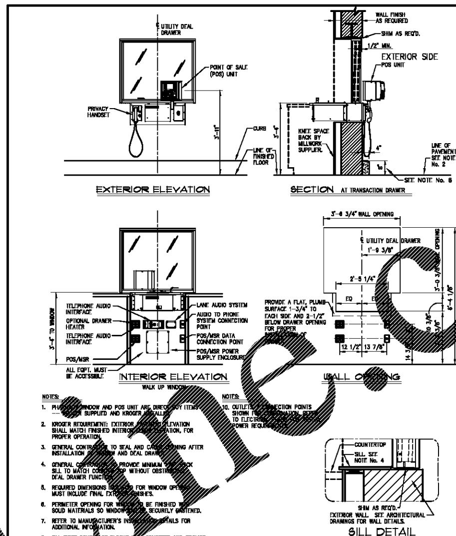

NOTES:

1. PHARMACY WINDOW AND POS UNIT ARE DIRECT BUY ITEMS — KROGER SUPPLIED AND KROGER INSTALLED.
2. KROGER REQUIREMENT: EXTERIOR PAVEMENT ELEVATION SHALL MATCH FINISHED INTERIOR FLOOR ELEVATION, FOR PROPER OPERATION.
3. GENERAL CONTRACTOR TO SEAL AND CAULK OPENING AFTER INSTALLATION OF WINDOW AND DEAL DRAWER.
4. GENERAL CONTRACTOR TO PROVIDE MINIMUM SOLID BLOCK SILL TO MATCH COUNTERTOP WITHOUT OBSTRUCTING DEAL DRAWER FUNCTION.
5. REQUIRED DIMENSIONS INDICATED FOR WINDOW OPENING MUST INCLUDE FINAL EXTERIOR FINISHES.
6. PERIMETER OPENING FOR WINDOW TO BE FINISHED WITH SOLID MATERIALS SO WINDOW CAN BE SECURELY FASTENED.
7. REFER TO MANUFACTURER'S INSTALLATION DETAILS FOR ADDITIONAL INFORMATION.
8. FILL FIRST COURSE OF BLOCKS WITH CONCRETE AND PROVIDE WEEP DRAINS ABOVE THE CURB AS NEEDED.
9. NOT USED.
10. OUTLETS & CONNECTION POINTS SHOWN FOR COORDINATION. REFER TO ELECTRICAL PLANS FOR POWER REQUIREMENTS.

Note:
Detail Based on Bavis:
Window -- 42" Basic Window
Drawer -- Basic Drawer BD 3.1
* Refer to Manufacturer's Project Installation Drawings for Additional Information.

BAVIS WALK-UP PHARMACY WINDOW — DATE: 2/18/16 SCALE: NONE DRAWN: ZAW — MASTER SPECIFICATION DRAWING — ASD-8A

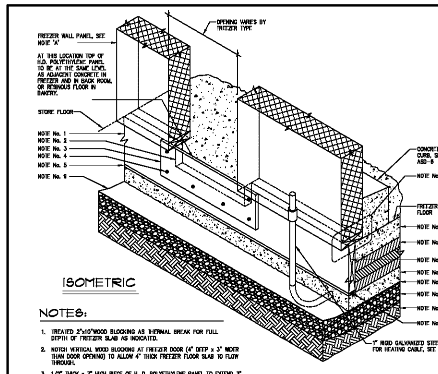

NOTES:

1. TREATED 2"x10" WOOD BLOCKING AS THERMAL BREAK FOR FULL DEPTH OF FREEZER SLAB AS INDICATED.
2. NOTCH VERTICAL WOOD BLOCKING AT FREEZER DOOR (4" DEEP x 3" WIDER THAN DOOR OPENING) TO ALLOW 4" THICK FREEZER FLOOR SLAB TO FLOW THROUGH.
3. 1/2" THICK x 7" HIGH PIECE OF H. D. POLYETHYLENE PANEL TO EXTEND 3" BEYOND NOTCH IN WOOD BLOCKING (LENGTH OF NOTCH DEPENDS ON WIDTH OF OPENING).
4. 1/4" x 1 1/4" GALVANIZED LAG SCREW WITH WASHER TWO SCREWS VERTICALLY AT ENDS OF PANEL INTO WOOD AND 12" O.C. ALONG THE BOTTOM VERTICALLY CENTERED IN WOOD UNDER NOTCH.
5. INSTALL 1x2 WOOD FILLER STRIP TO BOTTOM OF 2"x10" TO EQUAL TOTAL DEPTH OF INSULATION PLUS CONCRETE FREEZER FLOOR.
6. 4" THICK CONCRETE FREEZER FLOOR TO HAVE A MAGNESIUM FLOAT FINISH.
7. THREE 2" THICK LAYERS OF EXTRUDED-POLYSTYRENE FOAM INSULATION BOARD, STAGGER JOINTS, SEE SPECS.
8. 3" THICK (MIN.) CONCRETE BASE.
9. VAPOR RETARDER PER SECTION 033105 SPECIFICATIONS. EXTEND VAPOR RETARDER 3'-0" MIN. BEYOND PERIMETER OF FREEZER.
10. 4" (MIN.) BASE OF WASHED GRAVEL.
11. COMPACTED EARTH.
12. REFER TO FREEZER MANUFACTURER'S DRAWINGS FOR INSTALLATION OF PANEL WALL TO FLOOR CONSTRUCTION.

Recommended Temperature Pull Down Procedure:
ALLOW THE FLOOR TO CURE 7 DAYS WITHOUT ANY REFRIGERATION THEN START UP AND BRING THE TEMPERATURE DOWN AS FOLLOWS:
A. RUN FREEZER 24 HOURS AT 40F.
B. RUN FREEZER 24 HOURS AT 30F.
C. RUN FREEZER 24 HOURS AT 20F.
D. THEN BRING DOWN TO OPERATING TEMPERATURE.

Kroger Supplied:
A. WOOD FRAME INSULATED PANEL INCLUDING KEY WAY & GALVANIZED STEEL ANGLE, REFER TO MANUFACTURER'S INSTALLATION DETAILS.
B. FREEZER DOOR (NOT SHOWN) INCLUDING DOUBLE BLADED WIPER GASKET AND HEATER WIRE ON BOTTOM OF DOOR, REFER TO MANUFACTURER'S INSTALLATION DETAILS.

Contractor Supplied:
ALL OTHER MATERIALS INDICATED.

Note:
Detail Based on Hill Phoenix Panel System Design: Freezer – Wood Frame Wall to Floor Insulated Slab & Standard Inset Style Door
* Refer to Manufacturer's Project Installation Drawings for Additional Information.
H.D. Polyethylene Panel, refer to Building Specification Section 06 10 53 for further Information.

FREEZER FLOOR AND DOOR THRESHOLD — DATE: 11/2/15 SCALE: NONE DRAWN: ZAW — MASTER SPECIFICATION DRAWING — ASD-15A

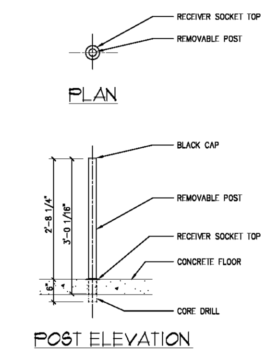

INSTALLATION INSTRUCTIONS:
1. CORE DRILL 2 1/4" DIAMETER HOLE, 4" MIN. DEEP. DEPENDING UPON THE SIZE OF THE CORE DRILLED HOLE, POUR A SMALL AMOUNT OF EPOXY IN THE HOLE, THEN INSERT SOCKET, FILLING IN WITH EPOXY AS NEEDED. INSERT POST IN TO SOCKET AND PROP UP IN VERTICAL POSITION UNTIL EPOXY SETS. IF A LARGER DIAMETER HOLE IS MADE (MAXIMUM 3") POUR STONE MAY BE USED TO SECURE SOCKET IN PLACE

Note:
Installation Instructions From National Cart Co. For NATIONAL CART 5050004 REMOVABLE POST.

REMOVABLE PROTECTIVE POST INSTALLATION — DATE: 5/2/16 SCALE: NONE DRAWN: ZAW — MASTER SPECIFICATION DRAWING — ASD-19

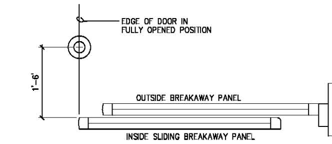

PLAN @ AUTOMATIC ENTRANCE DOORS
THE POSITIONING OF THE EXTERIOR ROLLER POSTS SHOULD STILL PROVIDE A MINIMUM 44" OF EMERGENCY EGRESS WHEN THE INSIDE SLIDING PANELS OF AUTO ENTRANCE SLIDING DOORS ARE BROKEN OPEN FROM THE CLOSED POSITION.

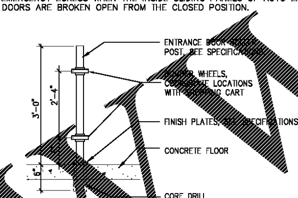

ROLLER POSTS ARE TO BE CORE DRILLED AND SET 6" BELOW FINISH FLOOR AFTER AUTOMATIC DOORS ARE INSTALLED

INSTALLATION INSTRUCTIONS:
1. CORE DRILL 2 1/2" DIAMETER HOLE, 6" DEEP SET WITH FAST-DRY, NON-SHRINK GROUT. GROUT MUST MEET OR EXCEED ASTM C 1107.

Note:
Installation Instructions from Curran Engineering Co. Web Site and Drawing No. 10150, CE410 & CE-411.

ENTRANCE DOOR ROLLER POST INSTALLATION — DATE: 5/7/14 SCALE: NONE DRAWN: ZAW — MASTER SPECIFICATION DRAWING — ASD-20

TYPICAL LOCATIONS:
- WASH DOWN AREAS
- PREP. AREAS, COOLER/FREEZER WALLS WITHOUT CURBS

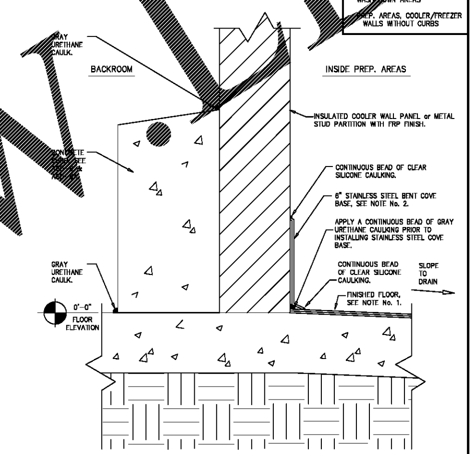

NOTES:
1. FINISHED FLOOR WILL VARY DEPENDING ON APPLICATION -- CONCRETE, RESINOUS or TILING.
2. 6" 22 ga. STAINLESS STEEL COVE BASE KROGER DIRECT BUY ITEM, OWNER SUPPLIED AND CONTRACTOR INSTALLED.
3. FOR COOLER WALLS WITH CURBS, REFER TO ASD-6.

WALL TO FLOOR BASE TYPE-B — DATE: 7/29/13 SCALE: NONE DRAWN: ZAW — MASTER SPECIFICATION DRAWING — ASD-51B

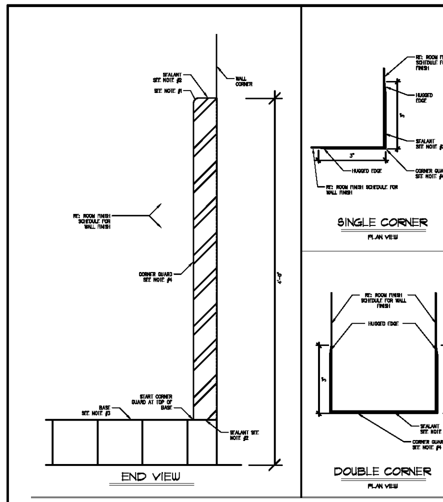

NOTICE:
1. REMOVE ALL SHARP CORNERS.
2. ADHERE STAINLESS STEEL TO WALL WITH CLEAR SILICONE SEALANT, TOP AND BOTTOM.
3. REFERENCE ROOM FINISH SCHEDULE FOR BASE TYPE TO BE USED.
4. 20 GA. 304 STAINLESS STEEL CORNER GUARD.

STAINLESS STEEL CORNER GUARD — DATE: 7/29/13 SCALE: NONE DRAWN: ZAW — MASTER SPECIFICATION DRAWING — ASD-55a

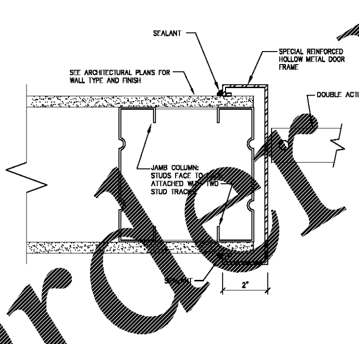

DOUBLE ACTING DOOR FRAME AT STUD PARTITION — DATE: 8/7/13 SCALE: NONE DRAWN: ZAW — MASTER SPECIFICATION DRAWING — ASD-56

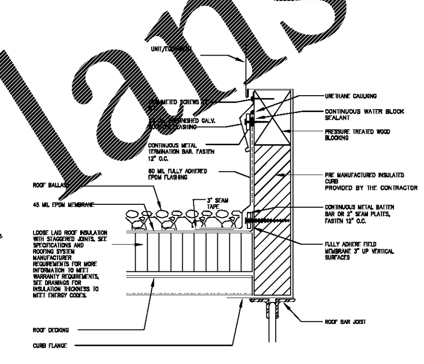

NOTES:
1) PREFABRICATED INSULATED EQUIPMENT ROOF CURB.
2) WHERE BASE FLASHING CAN BE EXTENDED OVER THE TOP OF THE CURB, NEW COUNTER FLASHING WILL NOT BE REQUIRED.
3) CURBS ARE TO BE A MINIMUM 8" FLASHING HEIGHT ABOVE THE FINISHED ROOF SURFACE.

Notice:
This Detail to be used in compliance with Kroger Limited Warranty.

BALLASTED EPDM ROOF CURB DETAIL — DATE: 4/22/13 SCALE: NONE DRAWN: ZAW — MASTER SPECIFICATION DRAWING — ASD-65C

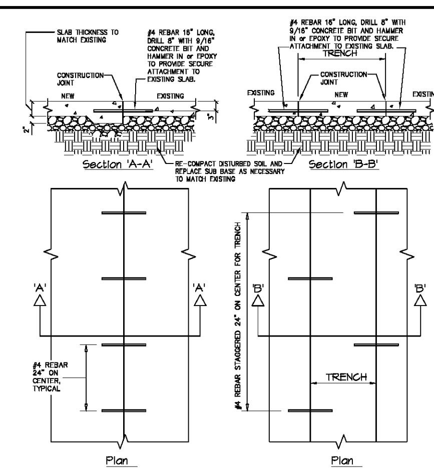

Notes:
IF ANY SIDE OF TRENCH IS 1'-0" or LESS, AWAY FROM CONTROL JOINT or CONSTRUCTION JOINT, SAWCUT AND REMOVE SLAB TO THE JOINT.
DO NOT CROSS CUT.

CONCRETE FLOOR REPLACEMENT AT EXISTING SLAB — DATE: 11/10/11 SCALE: NONE DRAWN: ZAW — MASTER SPECIFICATION DRAWING — ASD-69

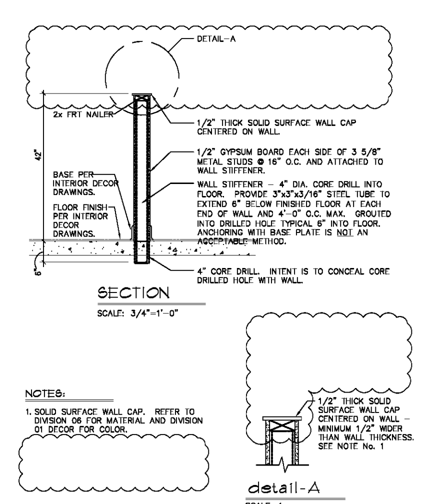

NOTES:
1. SOLID SURFACE WALL CAP. REFER TO DIVISION 06 FOR MATERIAL AND DIVISION 01 DECOR FOR COLOR.

ORIGINAL ISSUE DATE 5/7/14

SEATING AREA LOW DIVIDING WALL — DATE: 3/24/17 SCALE: NONE DRAWN: ZAW — MASTER SPECIFICATION DRAWING — ASD-73

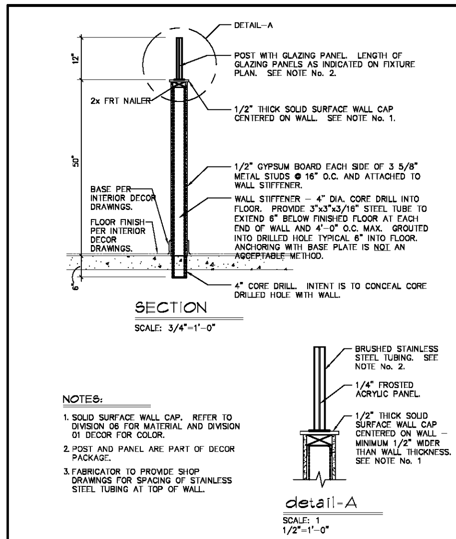

NOTES:
1. SOLID SURFACE WALL CAP. REFER TO DIVISION 06 FOR MATERIAL AND DIVISION 01 DECOR FOR COLOR.
2. POST AND PANEL ARE PART OF DECOR PACKAGE.
3. FABRICATOR TO PROVIDE SHOP DRAWINGS FOR SPACING OF STAINLESS STEEL TUBING AT TOP OF WALL.

ORIGINAL ISSUE DATE 11/10/16

SUSHI-DELI SEATING AREA LOW WALL — DATE: 3/24/17 SCALE: NONE DRAWN: ZAW — MASTER SPECIFICATION DRAWING — ASD-73A

D&E DOLLAR &EWERS ARCHITECTURE, INC.
1111E. Jackson Avenue • Suite 101
Knoxville, Tennessee • 37915
phone: 865-546-1111 • fax: 865-673-9028
e-mail: design@dollar-ewers.com

STATE OF GEORGIA — BRIAN KENT EWERS — REGISTERED ARCHITECT — CERTIFICATE NO. RA 11458

NO.	REVISIONS

A With-in-the-Walls Remodel for:
KROGER STORE #GA-414
4355 WASHINGTON ROAD, EVANS, GEORGIA 30809

ARCHITECTURAL STANDARD DETAILS

COPYRIGHT
ALL DRAWINGS, SPECIFICATIONS AND COPIES THEREOF FURNISHED BY DOLLAR & EWERS ARCHITECTURE, INC. ARE AND SHALL REMAIN THE PROPERTY OF DEA, INC. THEY ARE TO BE USED ONLY WITH RESPECT TO THIS PROJECT PROJECT AND ARE NOT TO BE USED WITH ANY OTHER PROJECT. WITH THE EXCEPTION OF ONE CONTRACT SET FOR EACH PARTY TO THE CONTRACT, SUCH DOCUMENTS ARE TO BE RETURNED OR SUITABLY ACCOUNTED FOR TO DEA, INC. ON REQUEST AT THE COMPLETION OF THE WORK. SUBMISSION DISTRIBUTION TO MEET OFFICIAL REGULATORY REQUIREMENTS OR FOR OTHER PURPOSES IN CONNECTION WITH THE PROJECT IS NOT TO BE CONSTRUED AS PUBLICATION IN DEROGATION DEA'S COMMON LAW COPYRIGHT OR OTHER RESERVED RIGHTS.
COPYRIGHT

ISSUE DATE: JANUARY 29, 2018
PROJECT NO.: 217156
SHEET NUMBER: A5.1

Order Plans @ WWW.LDIILine.co