12/19/2017 3:01:48 PM

KEYNOTES - ROOF PLAN

1	CRICKET W/ TAPERED INSULATION TYP.
2	CANOPY COMES IN 5'-0" SECTIONS AND 24" HANGER ROD HEIGHTS. ALL CUSTOM CANOPY DESIGNS HAVE A LEAD TIME OF 7-8 WEEKS.
3	SUNOPTICS PRISMATIC SKYLIGHT, 4040 SIGNATURE SERIES, TYP. REF. NOA's ON A0.1
4	R(TU) REF MECHANICAL SHEETS.
5	WALKING PAD TO BE A MINIMUM 30" AROUND MECHANICAL UNIT.
6	(NOT USED)
7	BACK-LIT FASCIA SIGN BY SEI.
8	WALL PACK LIGHTS REF: ELECTRICAL TYP.
9	PLUMBING VENT. REF PLUMBING SHEETS.
10	PRE-FINISHED METAL CAP FLASHING
11	(NOT USED)
12	EMERGENCY LIGHTING REF: ELECTRICAL
13	ROOF ACCESS REF: MATERIAL SCHEDULE
14	FLEXPACK REF MECHANICAL SHEETS.
15	REFRIGERANT PIPE PORTAL.
16	EXHAUST DUCT; REF PLUMBING SHEETS.
17	SINGLE PLY ROOFING; REF. EXTERIOR MATERIAL SCHEDULE

A2.4 - GENERAL NOTES

1. CONTRACTOR TO RESERVE SPECIFIED MAPES CANOPY UPON BEING AWARDED THE BID TO ENSURE AVAILABILITY AND TIMELY INSTALLATION. SUBSTITUTIONS ARE NOT PERMITTED.

NOTE:
1. DETAIL ELIMINATES PITCH POCKETS FOR PIPING PENETRATIONS THROUGH THE ROOF. PITCH POCKET INSTALLATIONS ARE PROHIBITED.
2. ATTACHED TREATED WOOD NAILER TO DECK WITH SUITABLE FASTNER AS REQ'D PER LOCAL AHJ.
3. PROVIDE MIN 2" BETWEEN PIPES AND 4" MIN CLEARANCE FROM PIPE TO TOP OF CURB.

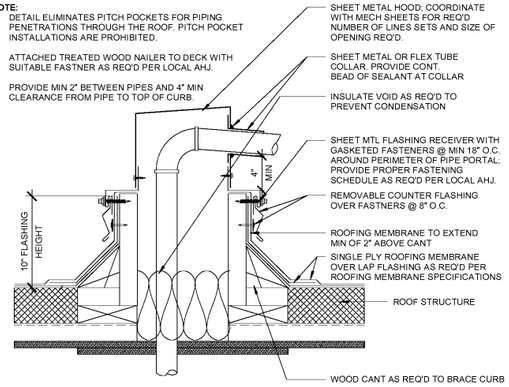

4 A2.4 **SECTION @ PIPE PORTAL**
1 1/2" = 1'-0"

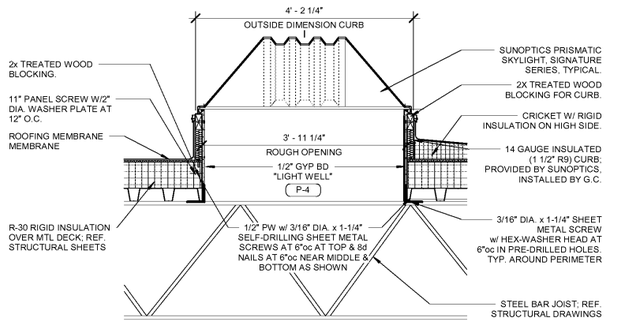

3 A2.4 **SKYLIGHT CROSS SECTION**
3/4" = 1'-0"

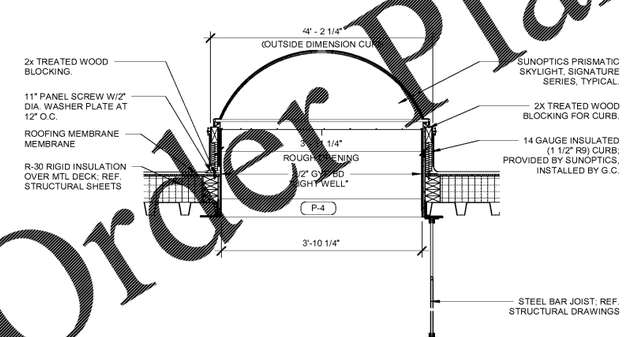

2 A2.4 **SKYLIGHT SECTION**
3/4" = 1'-0"

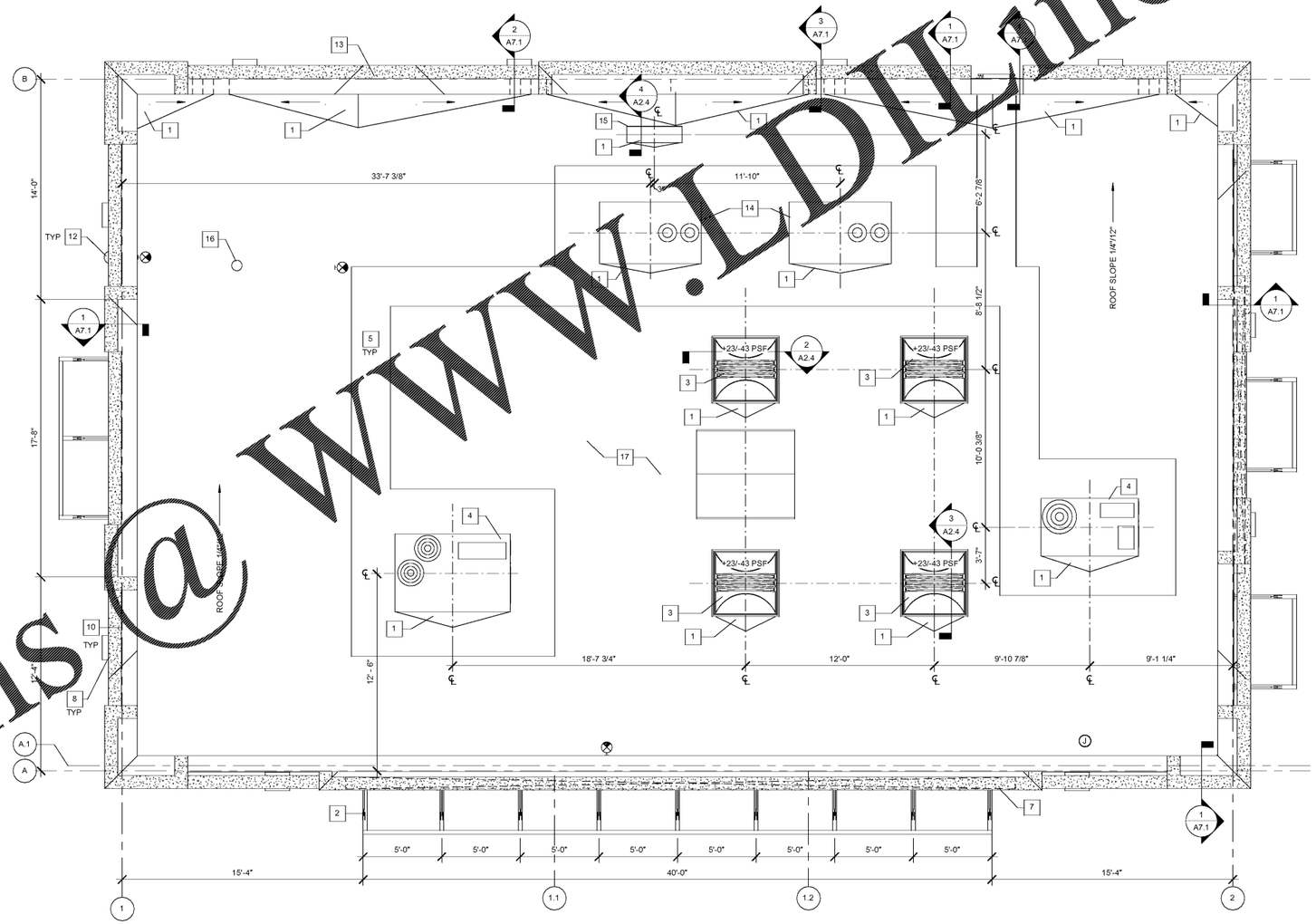

N

1 A2.4 **ROOF PLAN**
1/4" = 1'-0"

Order Plans @ www.LDLine.com

bates
106 N 37TH STREET, SUITE C
ROGERS, ARKANSAS 72756
WWW.BATESARCHITECTS.COM
TEL: 479.63

Florida Certificate of Authority #32366
Copyright © 2017 Bates & Associates Architects
Drawings and specifications as instruments of service are and shall remain the property of the Architect. They are not to be used on other projects or extensions to this project except by agreement in writing and with appropriate compensation to the Architect.

General Contractor is responsible for confirming and correlating dimensions at job site. Architect will not be responsible for construction means, methods, techniques, sequences or procedures, or for safety precautions and programs in connection with the project.

STORE #:
38227

CONSTRUCTION MANAGER
CREIGHTON CONSTRUCTION & MANAGEMENT, LLC.
900 SW PINE ISLAND ROAD; SUITE 202
CAPE CORAL, FL 33991

TENANT
7-ELEVEN INC.
3200 HACKBERRY ROAD
IRVING, TX 75063

STRUCTURAL CONSULTANT
SELECT STRUCTURAL
12573 NEW BRITTANY BLVD FORT MYERS, FL 33907

PROTO:08-21-2017

7-ELEVEN STORE
SW C/O CARROL ST. & DYER BLVD.
KISSIMMEE, FL 34741

CREIGHTON CONSTRUCTION & MANAGEMENT, LLC.
900 SW PINE ISLAND ROAD, SUITE 202
CAPE CORAL, FL 33991

12/19/2017
Architect Name - RYAN M FAUST
Architect Number - AR97905

THE SEAL AND SIGNATURE APPLY ONLY TO THE DOCUMENT TO WHICH THEY ARE AFFIXED AND WE EXPRESSLY DISCLAIM ANY RESPONSIBILITY FOR ALL OTHER PLANS, SPECIFICATIONS, ESTIMATES, REPORTS OR OTHER DOCUMENTS OR INSTRUMENTS RELATING TO OR INTENDED TO BE USED FOR ANY PART OR PARTS OF THE PROJECT.

REVISIONS

NO.	DATE	DESCRIPTION

PROJECT NUMBER: 17111
RELEASE DATE: 12/19/2017

ROOF PLAN

A2.4

BIM 360://38227 7-11 Kissimmee, FL @ Carroll St & Dyer Blvd (17111)/38227 KISSIMMEE FL_Central_A_R16.rvt