GENERAL NOTES AND SPECIFICATIONS

Clearing shall be limited to construction area and/or as directed by Owner or his representative. Grubbing of all stumps, roots, buried logs or other objectionable materials shall be to a depth of 18 inches below natural ground. All debris shall be removed from the site and legally disposed of.

Owner and contractor shall coordinate to provide construction survey.

The Contractor shall be responsible for protecting all existing buildings, structures, and utilities that are under ground, above ground, or on the surface against construction operations that may be hazardous to said facilities and shall hold and save the Owner, his agents and/or consultants harmless against all claims or damage.

The Contractor shall be responsible for all required tests and shall submit reports for review and approval. The tests shall be performed by an independent testing laboratory. Payment for testing per contract with owner. Any re-test for failure will be at the Contractor's expense.

Prior to construction the Contractor shall visually examine the site of construction to determine the amount of clearing and existing facilities to be protected, replaced, removed and/or relocated which may be required to commence work. All Contractor's shall protect existing improvements that are contiguous to the construction area.

The Contractor shall coordinate project construction and give adequate notification to all affected utility owners (ie: water and sewer utility, FP&L, AT&T, Cable, etc.) with regard to the need for removal, relocation or alteration of their existing facilities. Utility Companies shall be notified 48 hours prior to commencing construction. Call Sunshine.-Utility Notification Center- for location before excavation (1-800-432-4770).

The Contractor shall also coordinate and notify applicable utility agency personnel and Engineer for required inspections (min. 48 Hr. notice), and shall supply any and all equipment necessary to properly test or inspect the work.

Guaranty-All material and equipment to be furnished or installed by the Contractor(s) under the construction contract for this project shall be guaranteed against defective materials, and workmanship. Upon receipt of notice from the Owner of failure of any part of the installation, guaranteed equipment or materials, during the guaranty period, the affected part, parts or materials shall be replaced promptly with the new parts or materials by the Contractor, at no expense to the Owner. In the event the Contractor fails to make the necessary replacement or repairs within seven days after notification by the Owner, the Owner may accomplish the work at the expense of the Contractor.

All work shall be accomplished in a safe workmanlike manner. The Contractor shall comply with all applicable laws and regulations of any public body having jurisdiction for the safety of persons or property or to protect them from damage, injury or loss; and shall erect and maintain all necessary safeguards for such safety and protection. The responsibility for project safety rests solely and specifically with the Contractor. KESHAVARZ & ASSOCIATES, INC., the Owner, the regulatory agencies and their employees are specifically indemnified and held harmless from any actions of the Contractor relating to the safety procedures implemented during construction and for any claims brought by any persons regarding safety, personal injury or property damage.

Contractor shall coordinate with Owner and all other contractors to ensure proper construction sequence of project. The sequence of construction shall be such that all underground utilities shall be installed prior to pavement construction and other above ground improvements.

Elevations- All elevations refer to N.G.V.D.

Record Drawings-The Contractor shall be responsible to obtain and submit to Engineer a complete detailed set of Record Drawing data prepared by a Registered Florida Surveyor. The record drawings shall adhere to any and all specific criteria of the water and sewer utility, the Village of North Palm Beach GIS and Engineering Departments and any specifics required by the Engineer.

Underground Contractor shall submit all record data to the Engineer for his review and approval prior to pavement and/or curb installation. Any necessary adjustment at this time will be the responsibility of the underground Contractor.

Final adjustment of manhole rims, valve boxes, etc. that are within any paved area, shall be adjusted at the time the base material is in place, and shall be the responsibility of the underground Contractor.

Contractor shall protect all existing structures. Any damage to these structures by the paving Contractor shall be the paving Contractor's responsibility to coordinate repair.

MATERIALS AND CONSTRUCTION:
All concrete shall develop a 28 day minimum compressive strength of 3000 psi unless otherwise noted. Class I concrete shall conform with the Florida DOT Specifications, Latest Edition.

All steel shall be domestic grade 60 (Fy=60 Ksi) and conform to ASTM A-615 specifications. All steel splices, construction and placement, and all steel ties shall conform to NCMA and ACI practices and recommendations.

All masonry units and grout shall have a minimum compressive strength of 1800 psi and shall meet all NCMA specifications and recommendations.

If muck is encountered in the road right-of-way or any other paved or building areas, it shall be completely removed and shall be backfilled with clean, granular material in accordance with the recommendations of a Registered Florida Soils Engineer.

If hardpan is encountered in road side swales or any area designated for drainage, it shall be removed to a width of 2 feet at the swale invert, or 5' outside of drainage area, and shall be completely replaced with granular material.

Contractor shall be responsible to perform all excavation in accordance with the Department of Labor – Occupational Safety and Health Standards Excavation: Final Rule (29 CFR Part 1926) form Federal Regulations Tuesday October 31, 1991 and OSHA 2226 (Rev. 1990) Excavation and Trenching Standards.

SUBGRADE-Subgrade shall be compacted to meet the density requirements as determined by the AASHTO T-180 specifications. Subgrade shall extend a minimum of 12 inches beyond the proposed edge of pavement and the entire depth shall be compacted to 98% of maximum density.

All stumps, roots or other deleterious matter encountered in the preparation of the subgrade shall be removed to a depth of 3 feet below the finished road grade. All such material/matter shall be removed within 8 feet of the edge of pavement.

The subgrade shall be compacted and stabilized as shown in the details with bearing and density determinations to be made by the applicable latest Florida DOT Specifications.

BASE – Base material shall be compacted to not less than 98% maximum density as determined by AASHTO T-180 Specifications and as called for in the Florida DOT Specifications, latest Edition-Section 250. Base greater than 6" shall be constructed in two even lifts or 4" intervals and 6" beyond the edge of pavement.

PRIME COAT – Bituminous prime coat shall conform with the requirements of the Florida DOT Specifications, Latest Edition-Section 300, and shall be applied at a rate of 0.25 gallons per square yard unless otherwise noted.

TACK COAT – Bituminous tack coat shall conform with the requirements of the Florida DOT Specifications, Latest Edition-Section 330 and shall be applied at the minimum rate of 0.08 gallons per square yard unless otherwise noted.

SURFACE COURSE – Asphaltic concrete surface course shall conform with the requirements of the Florida DOT Specifications, Latest Edition Section 331. The minimum compacted thickness is as noted in plans.

Inlets shall be the type designated on the plans and shall be constructed in accordance with Florida DOT Specifications, Latest Edition-Section 425, unless otherwise noted in the plans.

Corrugated Aluminum Pipe Helical (CAP) shall conform with the Florida DOT Specifications, Latest Edition-Section 945. Pipe may be helical and is designated within the plans as CAPH. Pipe sizes are as shown in the plans. All joints in storm sewer pipe shall be made with either 1/2 inch neoprene or 1/4 inch strip sealant gasket material. All bands shall be 12 inches wide. The pipe shall conform with Florida DOT Specifications, Latest Edition. Corrugated Aluminum pipe shall not be constructed under paved areas, unless otherwise noted in the plans.
Reinforced Concrete Pipe (RCP) shall conform with the requirements of Table III of ASTM C-76 and with the Florida DOT Specifications, Latest Edition-Section 941.
All pipe joints shall be wrapped with filter fabric jacket in accordance with FDOT index 280.

Reinforced Concrete Pipe (RCP) shall conform with the requirements of Table III of ASTM C-76 and with the Florida DOT Specifications, Latest Edition-Section 941.

DENSITY TEST FOR TRENCHES SHALL BE TAKEN IN MAXIMUM ONE FOOT (1') LIFTS, MEASURED FROM TOP OF PIPE. THE TESTS SHALL BE TAKEN, AT A MAXIMUM SPACING OF EVERY 300 FEET MEASURED FROM THE STRUCTURE, OR AT LEAST ONE TEST AT CENTER OF THE PIPE SEGMENT BETWEEN TWO STRUCTURES IF LESS THAN 300 FEET. TESTS SHALL ALSO BE TAKEN, ON ALTERNATING SIDES OF THE STRUCTURE WITH EACH LIFT TESTED. THE TEST LOCATIONS AT THE STRUCTURE SHALL BE WITHIN FIVE (5') FEET OF THE STRUCTURE. THE LOCATION AND DEPTH OF ALL TESTS SHALL BE CLEARLY INDICATED IN THE DESCRIPTION AREA ON THE TEST REPORT. THE TESTING LAB SHALL CERTIFY THE COMPACTION LIFT THICKNESS IN THE TEST REPORT.

All handicap ramps shall be constructed in accordance with latest FDOT Roadway and Traffic Design Standards and latest ADA requirements.

All street pavement markings shall be in accordance with MUTCD. All pavement markings, excluding parking stall striping (paint allowed), shall be thermoplastic meeting the requirements of the FDOT Road and Bridge specifications, latest edition.

All pavement markings on paver brick areas shall be installed using the appropriate colored bricks to provide the markings as required and as shown on the plan sheets of the construction drawings.

The Contractor shall be responsible for all traffic control in accordance with all applicable Federal, State, Local and Municipal codes and regulations. Traffic control shall also be in accordance with Florida DOT Index 600.

All pipe joints shall be wrapped with filter fabric jacket in accordance with FDOT index 280.

Utility conduits/Irrigation conduits shall be placed per Owner's directions and clearly marked after construction. Contractor shall obtain record drawing data on all crossing.

Contractor shall obtain copies of the Florida Department of Transportation (FDOT) "Roadway and Traffic Design Standards" (latest edition), the FDOT "Standard Specifications for Road and Bridge Construction" (latest edition) and all other information and referenced standards. These standards and specifications shall be reviewed and be available at the job site for all contractors reference. All materials and workmanship shall comply with these standards and with the details shown on the plans.

PRE-CONSTRUCTION CONFERENCE

A preconstruction conference with the Owner, Engineer, Contractors and any involved parties will be scheduled by the prime Contractor prior to the initiation of construction.

MINIMUM CONSTRUCTION CHECKPOINTS

The Contractor shall notify the Engineer or his representative for an inspection of the following check points including but not limited to:

-Prior to any major deviations from the approved plans.
-Prior to Backfilling any hydraulic conduits or structures.
-Upon completion of subgrade compaction
-Upon completion of base construction
-Concrete pours for poured in place structures
-Lamping of all sanitary mains
-Prior to water main flushing
-Pressure testing of water mains
-Prior to any connection to existing facilities

Note: Any tests or observations required by the Utility Company or regulatory agencies that are in addition to and more restrictive than above shall be complied with.

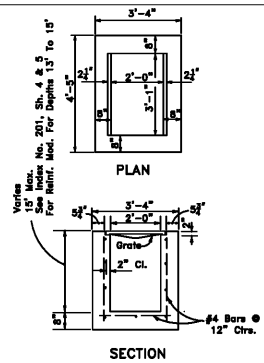

TYPE C INLET DETAIL

PROVIDE 1' SUMPS FOR ALL STRUCTURES

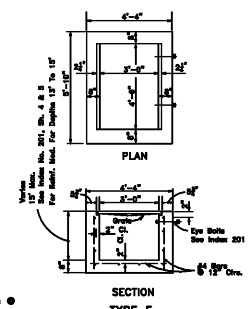

TYPE E INLET DETAIL

PROVIDE 1' SUMPS FOR ALL STRUCTURES

NOTE: INLETS SHOWN ABOVE DEPICT STANDARD "DITCH BOTTOM" TYPE TOP SECTIONS FOR INLETS IN GRASS AREAS. INLET DIMENIONS AND DETAILS SHOWN SHALL BE USED FOR INLETS IN PAVED AREAS AND THE NOTCH IN THE TOP SECTION OMITTED. CONCRETE COLLARS AND FRAME AND GRATE COMBINATIONS SHALL BE USED IN PAVED AREAS.

GENERAL NOTES FOR INLETS

1. Inlets shall have 8" minimum wall thickness, and all grates shall be domestic.
2. Inlets subject to minimal debris should be constructed without slots. Where debris is a problem inlets should be constructed with slots. Slotted inlets located within roadway clear zones and in areas accessible to pedestrians shall have traversable slots. The traversable slot modification is not adaptable to inlet Type H. Slots may be constructed at either or both ends as shown on plans.
3. Steel grates are to be used on all inlets where bicycle traffic is anticipated. Steel grates are to be used on all inlets with traversable slots. Either cast iron or steel grates may be used on inlets without slots where bicycle traffic is not anticipated. Either cast iron or steel grates may be used on all inlets with non-traversable slots.
4. Recommended maximum pipe sizes shown are for concrete pipe. Pipe sizes larger than those recommended must be checked for fit.
5. All exposed corners and edges of concrete are to be chamfered.
6. Sodding to be used on all inlets not located in paved areas.
7. For supplementary details see F.D.O.T. Index No. 201.
8. GRATES IN GRASS AREAS SHALL BE USF 6210 GRATES IN PAVED AREAS SHALL BE USF 6209 (USED WITH CONC. COLLAR) FRAME AND GRATES IN PAVED AREAS SHALL BE USF 4155-6209

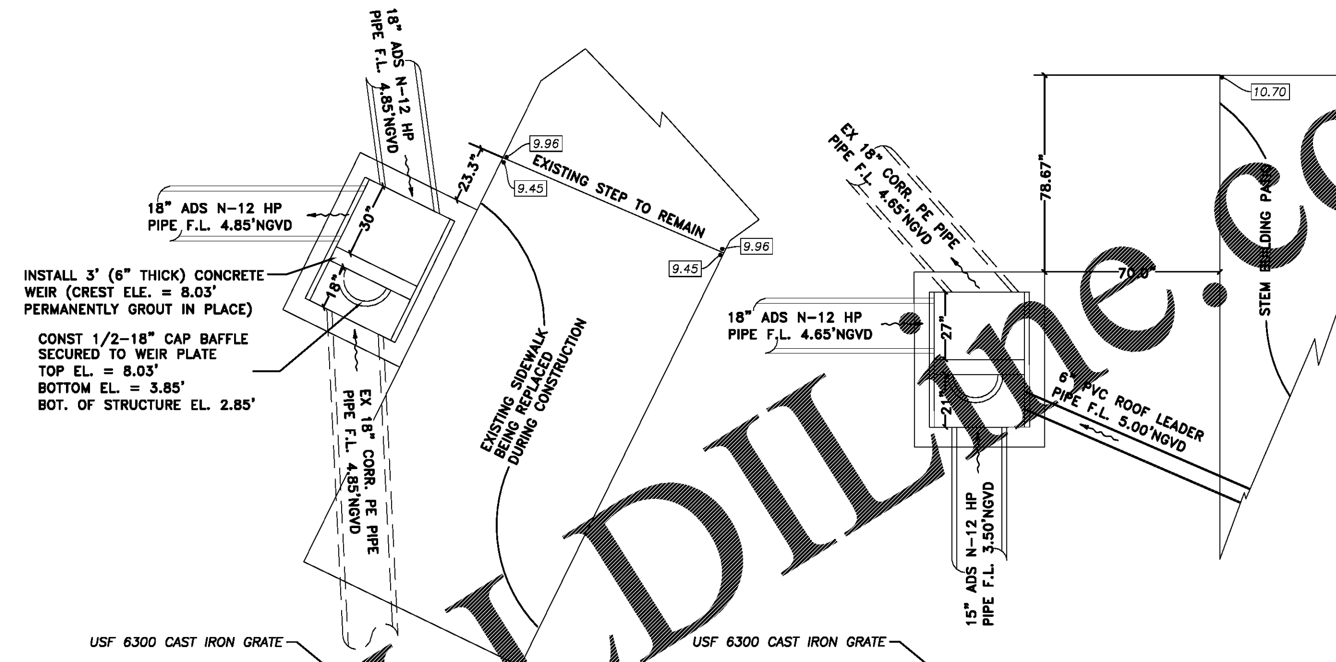

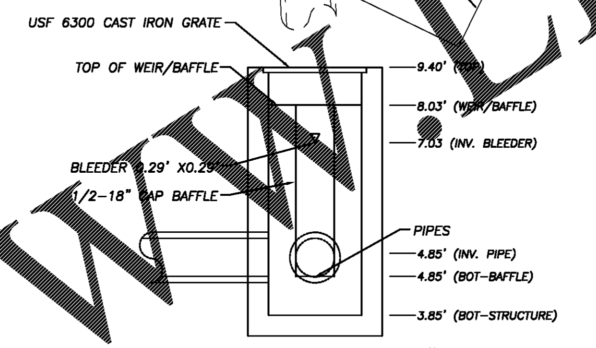

CONTROL STRUCTURE #1 (STR 1-5)

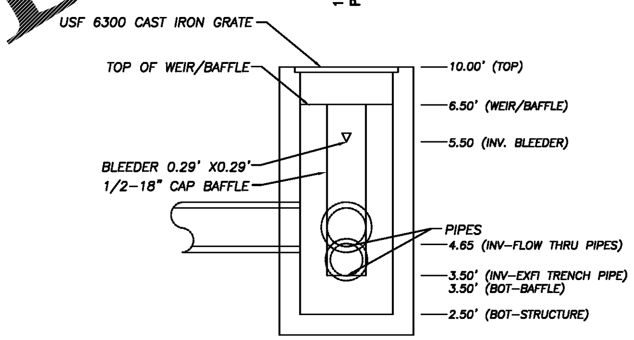

CONTROL STRUCTURE #2 (STR 1-1)

MODIFIED TYPE E INLET

-A 1' SUMP SHALL BE PROVIDED IN ALL DRAINAGE STRUCTURES.
-SHOP DRAWING REQUIRED

UPON COMPLETION SURVEYOR TO ESTABLISH PERMANENT BENCHMARK ON TOP OF STRUCTURE

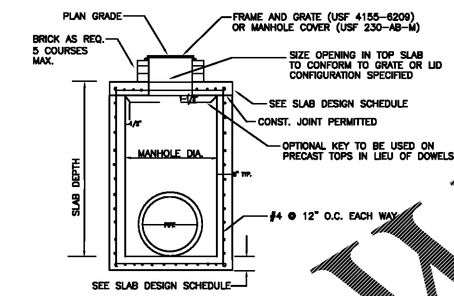

SLAB DESIGN

DIAMETER	SLAB DEPTH	SLAB THICKNESS	REINFORCING SCHED. (2-WAYS)*
4'	0.5'-40'	8"	0.37 SQ. IN./ FT.
5'	0.5'-30'	8"	" " "
6'	0.5'< 8'	8"	0.26 SQ. IN./ FT
	8' < 18'	8"	0.37 SQ. IN./ FT.
8'	0.5' < 9'	10"	" " "
	9' < 15'	10"	0.53 SQ. IN./ FT.
	15' < 23'	10"	0.73 SQ. IN./ FT.

* GRADE 60 STEEL OR 60 KSI WIRE FABRIC

TYPE "P" MANHOLE/INLET

PROVIDE 2' SUMPS FOR ALL STRUCTURES

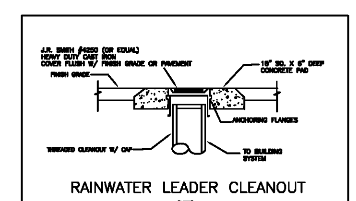

COORD. CO's AND MANIFOLDING OF RWLs WITH ARCHITECTURAL PLANS. LEADERS TO HAVE MINIMUM 24" COVER OVER CROWN OF PIPE (DEEPER IF POSSIBLE). RWL TO HAVE FURNCO COUPLER AT CB-TJSW TO INSPECT

(INLCUDED IF NEEDED)

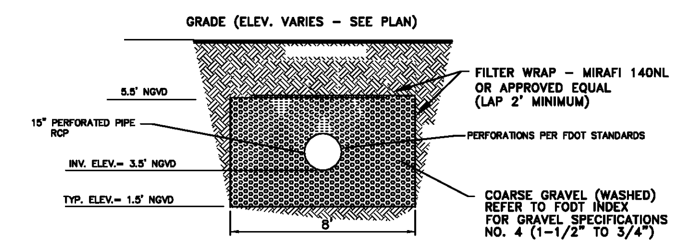

EXFILTRATION TRENCH TYPICAL SECTION

N.T.S.

NOTE:

- NON-PERFORATED PIPE TO BE INSTALLED 8' FROM STRUCTURE. TRENCH TO END 4' FROM STRUCTURE. TERMINATE TRENCH PER F.D.O.T. INDEX NO. 285
- FOR ADDITIONAL INFORMATION REFERENCE F.D.O.T. INDEX NO. 285 AND FDOT SECTION 443 (FRENCH DRAINS) OF THE STANDARD SPECIFICATIONS FOR ROAD AND BRIDGE CONSTRUCTION (LATEST EDITION)
- *WATER TABLE ELEVATION MAY VARY BASED ON SEASONAL CONDITIONS

SITE COORDINATION NOTES

GENERAL NOTES (AS APPLICABLE):
- CONTRACTOR SHALL COORDINATE ALL SITE IMPROVEMENTS SHOWN WITH THE ARCHITECTURAL PLANS FOR THE BUILDINGS TO VERIFY ALL SERVICE CONNECTIONS, ELEVATIONS, AND OTHER PROPOSED FACILITIES.
- CONTRACTOR SHALL COORDINATE THE INSTALLATION OF ALL CONDUITS AND UNDERGROUND LINES FOR IRRIGATION, ELECTRIC, PHONE, ETC. WITH THE PAVING AND DRAINAGE FACILITIES TO ASSURE THAT THE LINES AREA INSTALLED PRIOR TO THE INSTALLATION OF THE PAVEMENT SECTION.
- CONTRACTOR SHALL COMPLETE ALL SITE GRADING PRIOR TO THE INSTALLATION OF LANDSCAPING.
-CONTRACTOR TO COORDINATE WITH OWNER TO LOCATE WALKWAYS TO AVOID CONFLICTS WITH HYDRANTS, SANITARY SEWER SERVICES AND WATER METERS.
-VALVES SHALL NOT BE CONSTRUCTED IN CURBS, AND ALL VALVES, GRATES, AND MANHOLES SHALL BE ADJUSTED AT TIME OF BASE CONSTRUCTION.
-GRASSING AND SODDING SHALL BE IN ACCORDANCE WITH LANDSCAPE PLANS
-CONTRACTOR TO VERIFY EXISTING WATER AND SEWER SYSTEMS AT TIE-IN POINTS PRIOR TO ORDERING MATERIALS OR BEGINNING CONSTRUCTION. ANY DEVIATIONS SHALL BE BROUGHT TO THE ATTENTION OF THE ENGINEER AND UTILITY COMPANY.
- ALL OPEN AREAS ARE TO POSITIVELY DRAIN AWAY FROM BUILDINGS AND TO NEAREST AVAILABLE DRAINAGE FACILITY
-FIELD ADJUST SWALES IN COORD. WITH LANDSCAPING PLAN TO ENSURE POSITIVE DRAINAGE.
-CONTRACTOR SHALL PROTECT POWER POLES, GUY WIRES, ETC. FROM DAMAGE DURING CONSTRUCTION. ANY CONFLICTS WITH THE PROPOSED IMPROVEMENTS SHALL BE COORDINATED DIRECTLY WITH THE AFFECTED UTILITY COMPANY. CONTRACTOR TO COORDINATE DIRECTLY WITH UTILITY COMPANY FOR SECURING POLES DURING CONSTRUCTION, AS NEEDED.
-ROOF DRAINS AND CONDENSATE LINES CAN BE CONNECTED TO CATCH BASINS. CONTRACTOR(S) SHALL COORDINATE ALL SITE CONSTRUCTION PLANS INCLUDING ARCHITECTURAL, PRIOR TO ORDERING CATCH BASINS SO THAT ROOF DRAIN OPENINGS CAN BE PRE-CAST. FIELD CORING OF CB'S IS ALSO PERMISSIBLE. RWL AND DRAIN SIZE PER ARCH. PLANS. ALL RWL'S AND OTHER LINES SHALL HAVE MINIMUM COVER OF 24" FROM FINISH GRADE.
-LANDSCAPING, YARD DRAINS, IRRIGATION SYSTEMS, LIGHTING BY OTHERS SHALL BE FIELD ADJUSTED TO AVOID CONFLICTS WITH UTILITY SYSTEMS PER REGULATORY AGENCY REQUIREMENTS.
-STRIPING SHALL BE IN ACCORDANCE WITH CURRENT MUNICIPAL CODES AND CONTRACTOR SHALL VERIFY STRIPING REQUIREMENTS FOR ALL STRIPED AREAS PRIOR TO STRIPING
-ALL CATCH BASINS SHALL HAVE CLEAN MIRAFI FILTER FABRIC MAINTAINED ON THEM AND ANY AND ALL CONTRACTORS SHALL TAKE ANY REQUIRED ACTIONS TO PREVENT SOIL EROSION INTO THE DRAINAGE SYSTEM. MANHOLES, ETC.
-UPON COMPLETION OF CONSTRUCTION ALL DISTURBED AREAS INCLUDING EXISTING FACILITIES, RIGHTS-OF-WAY, SIDEWALKS, LANDSCAPING, ETC. SHALL BE FULLY RESTORED.
-UPON COMPLETION OF ANY AND ALL SLOPES WITHIN THE PROJECT, PROTECTION MEASURES SUCH AS SOD, PLANTINGS, AND/OR TEMPORARY FILTER FABRICS SHALL BE INSTALLED TO PREVENT EROSION.

NOTE: WATER AND SEWER UTILITY PROVIDER IS SEACOAST UTILITY AUTHORITY

-ALL LIGHTING, TRASH RECEPTACLES, BENCHES, MONUMENT SIGNS, LANDSCAPING AND IRRIGATION/RE-USE SYSTEMS, ETC. (ALL BY OTHERS) SHALL BE PER APPLICABLE ARCHITECTURAL, LANDSCAPE, LIGHTING PLANS, ETC. AND SHALL BE COORDINATED TO AVOID CONFLICTS WITH INFRASTRUCTURE SYSTEMS.

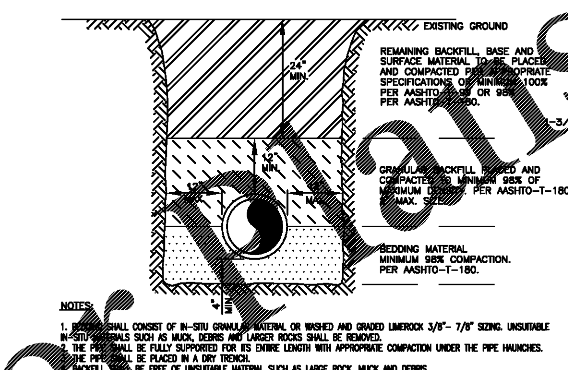

NOTES:

1. BEDDING SHALL CONSIST OF IN-SITU GRANULAR MATERIAL OR WASHED AND GRADED LIMEROCK 3/8"- 7/8" SIZING. UNSUITABLE IN-SITU MATERIALS SUCH AS MUCK, DEBRIS AND LARGER ROCKS SHALL BE REMOVED.
2. THE PIPE SHALL BE FULLY SUPPORTED FOR ITS ENTIRE LENGTH WITH APPROPRIATE COMPACTION UNDER THE PIPE HAUNCHES.
3. THE PIPE SHALL BE PLACED IN A DRY TRENCH.
4. BACKFILL SHALL BE FREE OF UNSUITABLE MATERIAL SUCH AS LARGE ROCK, MUCK AND DEBRIS.
5. DENSITY TESTS ARE REQUIRED IN 1 FOOT LIFTS ABOVE THE PIPE AT INTERVALS OF 300', OR AT LEAST ONE DENSITY TEST AT CENTER OF PIPE SEGMENT BETWEEN TWO STRUCTURES IF LESS THAN 300 FEET, AND/OR AS DIRECTED BY THE INSPECTOR.
6. DENSITY TESTS SHALL BE TAKEN ON ALL SIDES OF THE STRUCTURES, WITHIN FIVE FEET OF THE STRUCTURE, ALTERNATING SIDES WITH EACH LIFT TESTED.
7. THE LOCATION AND DEPTH OF ALL TESTS SHALL BE CLEARLY INDICATED IN THE DESCRIPTION AREA ON THE TEST REPORT.
8. THE DEVELOPER/CONTRACTOR SHALL BE RESPONSIBLE TO COMPLY WITH ALL TRENCH SAFETY LAWS AND REGULATIONS.
9. SEE SEPARATE DETAIL FOR "PIPE INSTALLATION UNDER EXISTING PAVEMENT – OPEN CUT."
10. THE AFFECTED AREA SHALL BE RESTORED TO EQUAL OR BETTER CONDITION OR AS SPECIFIED IN PERMIT/CONTRACT DOCUMENTS.

TYPICAL PIPE TRENCH DETAIL

ALL PIPE JOINTS SHALL BE WRAPPED WITH FILTER FABRIC JACKET IN ACCORDANCE WITH FDOT INDEX 280.

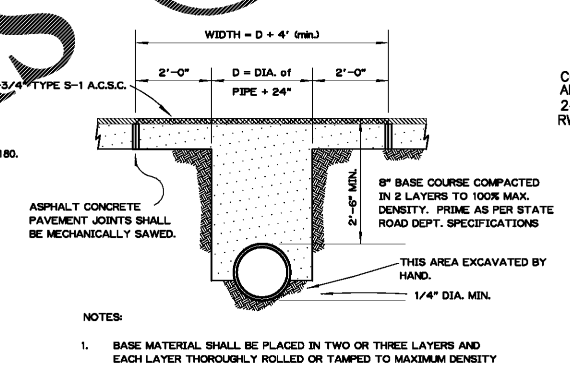

NOTES:

1. BASE MATERIAL SHALL BE PLACED IN TWO OR THREE LAYERS AND EACH LAYER THOROUGHLY ROLLED OR TAMPED TO MAXIMUM DENSITY BY AASHTO T-180 SPECIFICATIONS. PALM BEACH COUNTY APPROVED SHELLROCK.
2. TRENCH TO BE BACKFILLED IN 8" MAX. LAYERS COMPACTED TO 98% MAX. DRY DENSITY.

TYPICAL PAVEMENT RESTORATION

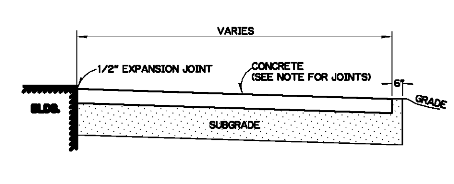

CONCRETE WALKWAY SHALL BE 4" THICK, 3000 PSI AT 28 DAYS

SUBGRADE: 12" THICK, COMPACTED TO 98 % MAX DRY DENSITY PER AASHTO T-180 AND STABILIZED TO 35 PSI F.B.V.

TYPICAL SIDEWALK RESTORATION

VERTICAL DATUM
ALL ELEVATIONS SHOWN ARE IN NATIONAL GEODETIC VERTICAL DATUM OF 1929 (NGVD29)
CONVERSION FACTOR:
NGVD29 - 1.512 = NAVD88

IT'S THE LAW !
CALL TWO (2) BUSINESS DAYS BEFORE YOU DIG
SUNSHINE 811

Mark Williams
P.E. 34944
Oct 26, 2017

KESHAVARZ & ASSOCIATES
Civil Engineers ● Land Surveyors
711 North Dixie Highway, Suite 201
West Palm Beach, Florida 33401
Tel: (561) 689-8600
Certificate of Authorization No. 4897

No.	Date	Description

GRADING, PAVING AND DRAINAGE DETAILS

DATE	10-26-17	DESIGNED	MW	CHECKED	MW
SCALE	NONE	CAD	AG	APPROVED	MK

BENJAMIN SCHOOL
STEM BUILDING
PALM BEACH COUNTY, FLORIDA

PROJECT No. 16-1147

SHEET No. C05

PLOT DATE: Oct 26, 2017 TIME: 3:02pm BY: agreen
DRAWING: P:\16-1147 Benjamin School STEM Bldg\KA DWG\C05_161147_DETA-GPD.dwg LAYOUT: C05

Order Plans @ WWW.LDILine.com